KENTUCKY BUREAU OF HIGHWAYS
JEFFERSON COUNTY
LOUISVILLE – LEXINGTON
I 64-13TH STREET TO 7TH STREET

MAINLINE – SUBSTRUCTURE & STRUCTURAL STEEL

INDEX OF PLANS

NOTES:
For General Notes and Structural Steel Notes see Sheets No. A2 – A3.
For Estimated Quantities and Bill of Incidental Material see Sheet No. A2a.
For Lists of References, Special Provisions and Special Notes see Sheet No. A2a.

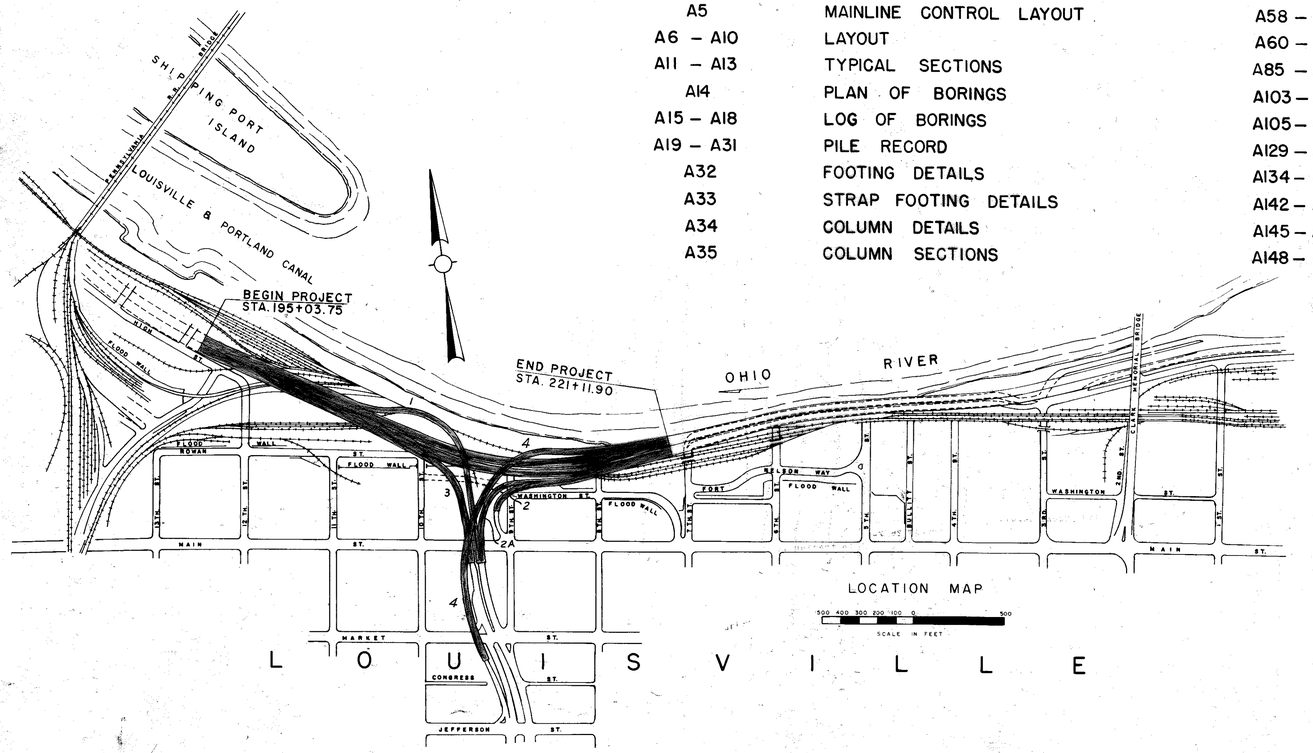

LOCATION MAP

SCALE IN FEET

Drawings for Entire Project to be Divided as Follows:

Sheet Prefix	Drawing No.
A	18572
B	18573
C	18574
D	18575

A- Mainline - Substructure and Structural Steel
B- Mainline – Deck
C- Ramp-Substructure and Superstructure
D- Ramp Heating

NOTE: All of the Above Drawings Shall be Worked Together.

*INCLUDES SHEET A2a AND SHEET A46 HAS BEEN DELETED.

SHEET A1 OF 150 *

COMMONWEALTH OF KENTUCKY
BUREAU OF HIGHWAYS
FRANKFORT
COUNTY OF
JEFFERSON
I64-13TH ST. TO 7TH ST
LOUISVILLE - LEXINGTON
ROAD

STATION 208+08 **P. E. PROJECT NO.** SP 56-273-III I 64-2(35)3

CONSTRUCTION PROJECT NO.	MAINTENANCE PROJECT NO.	DRAWING NO.
I64-2(87)3		18572

TITLE SHEET

HAZELET & ERDAL CONSULTING ENGINEERS FILE NO. 893-B

DESIGNED BY | DATE | REVISED | DATE | REVISED | DATE
DETAILED BY | CHECKED BY | DATE | REVISED | DATE
TRACED BY CBF | CHECKED BY Block | DATE 6-71 | REVISED | DATE

4-26-73

MPC-CD-73

LETTING DATE 4-26-72

DESIGNED BY RHC	CHECKED BY Block	DATE Mar-72	REVISED Reinf. Quantity in C & total
DETAILED BY CBE	CHECKED BY	DATE	REVISED Reinf. Quantity in B & total
TRACED BY JBW	CHECKED BY RHC & Block	DATE Mar-72	REVISED Reinf. Quantity in B & Total
SCB	DATE 2-13-74		
TAR	DATE 7-11-74		
JBW	DATE 4-10-75		

EXPANSION JOINT NOTES: All steel parts of the assembly shall be painted in accordance with the special provision for Blast Cleaning and Painting Structural Steel, current edition, except areas in contact with the preformed joint seals or areas which are covered with urethane rubber pad.

Steel in expansion joints, except as noted, support bar covers, studs and stops, shall be ASTM A588.

No splices will be permitted in the polychloroprene joint sealer.

The fabricator shall provide prestressing bolts placed through the entire unit after assembling. Assembly is to be prefabricated and shipped to site with width preset for 60°F. Final adjustment for width shall be made at the time of installation. Prestressing bolts shall be removed prior to pouring concrete against the joints.

Any holes for prestressing bolts in top flanges of steel channels shall be sealed by plug welding.

The expansion joints shall be fabricated to follow the contour of the top of roadway slab.

Polychloroprene joint sealer ends shall be cut square and sealed with polychloroprene sponge cemented to the full perimeter and walls.

For material specifications for polychloroprene sealer, urethane and adhesives, see Special Notes.

When the expansion joint is installed, prestressing bars released, and the concrete deck is poured the 5I 14.75 I-bars shall be absolutely straight and parallel, in proper vertical alignment and an equal distance apart. The preformed compression seals shall be of such construction that they shall maintain the I-bars in their proper alignment. If the I-bars are not in proper alignment, they shall be adjusted or reworked until proper alignment is obtained. This adjustment or rework shall be at the Contractor's expense with no additional cost to the State.

Support Bar Covers are to be fabricated in the shop and welded in position as shown.

Payment for all Expansion Dam material shall be included in lump sum bid for Expansion Dams.

All studs are to be shop or field welded to 9-inch channel or plate.

SPECIAL PROVISIONS:

#6-B Staking

#8-B Linseed Oil Protective Coating

#30-B Membrane Curing of Concrete Structures

#31 Pile Load Tests

#35-B Class "AA" Concrete

#36-A Set-Retarding Admixture

#37-C Preformed Compression Joint Seals

102 Coarse Aggregates

▽ #101 Welding Steel Bridges

#79 Concrete Bridge Deck Finishing Machine

#80-B Blast Cleaning and Painting Structural Steel

#86-A Fitch-Type Energy Absorbing Barrier System

#95 Hi-Dro Cushion Type Energy Absorbing Barrier System

#99-A Concrete surface Finish

SPECIAL NOTES FOR:

Reinforced Concrete Bridge Floors For The Riverside Parkway

Driving Piles Under Floodwall Monoliths and Adjacent Footings

Placing Piles Thru Fill For The Riverside Parkway

Expansion Joint Sealing System

Ramp Heating for the Riverside Parkway

▽ Wherever Standard Drawing AWS3-A is referred to in Drawings 18572 through 18574, substitute Special Provision #101.

* See "NOTE" below right.

* ***REFERENCES:*** (Standard Drawing listed below are the current edition and are used with these plans)

P2-A	14" Reinforced Concrete Precast Pile
P20-A	14" Cast-in-Place Concrete Pipe Pile
P21B	14" Cast-in-Place Concrete Pile, Fluted Steel Shell
P22	14" Cast-in-Place Concrete Pile, Corrugated Steel Step-Taper Shell
P23A	14" Precast Prestressed Concrete Pile
P24	14" Cast-in-Place Concrete Pile, Corrugated Steel Step-Uniform Diameter Shell
P212A-A	12" Structural Steel Bearing Pile at 53 Lbs.
H117E	High-Strength Aluminum Handrail
~~AWS3-A (3sheets)~~	~~Modifications and Additions to AWS-D2.0-69 Specifications~~
SP1	Standard Concrete Slopewalls for Grade Separation Bridges
RBC-001	Guard Rail Connector to Bridge End Type A
AE2-D	Standard Armored Edge for Joints in Concrete
SF2B	Standard Details for placing End Bent Backfill and Earth Core
CD 2-A	Stencil Construction Date for Bridges
H115F	Standard High Strength Aluminum Handrail

BILL OF INCIDENTAL MATERIAL

ITEM	AMOUNT	LOCATION
1/2" Premolded Joint Filler Sq. Ft.	1450	Replaced Monoliths and Railroad Closures
Bituminous Seal Lin. Ft.	60	Replaced Monoliths and Railroad Closures
1/8" Thick Bituminous Mastic Sq. Ft.	572	Replaced Monoliths and Railroad Closures
4 Bolt Insert Assembly Each	8	Wingwalls-Each End Bent
Preformed Joint Seal (2 1/2 x 2 3/4) Lin. Ft.	126	End Bent-Approach Slab Joint
Caulking Lin. Ft.	70	Monolith 2RC

The quantities shown in the Bill of Incidental Material are approximate only and the contractor is responsible for furnishing enough material to complete the work according to the plans and specifications. The cost of these items is to be included in the unit price bid for Class "AA" Concrete.

SUPERSTRUCTURE

8,606,170
2,600,913
1,115,778
3,721,948
3,716,691

ESTIMATE OF QUANTITIES

ITEM	UNIT	SHEETS PREFIXED: A	B	C	D	TOTAL
Concrete, Class "AA"	Cu. Yd.		8,840.6	4,475.4		13,316.0
Steel Reinforcement	Lbs.		2,603,940	1,114,435		3,718,375
Structural Steel	Lump Sum	(1)		(2)		L.S.
Handrail, H.S.	Lin. Ft.		7,163.9	8,474.5		15,638.4
Protective Coating (A)	Sq. Yd.		31,902	13,842		45,744
Shear Connectors	Lump Sum	(3)		(4)		L.S.
Expansion Dams	Lump Sum		(5)	(6)		L.S.
Drain Pipe, 6"φ	Lin. Ft.		(7)	(8)		7,392
Deck Heating	(14)				(14)	(14)
Overhead Sign Supports	Lump Sum		(9)	(10)		L.S.
Crash Barriers	Lump Sum		(11)	(12)		L.S.
Replacement Elements	Lump Sum		(13)			L.S.

(A) Linseed Oil

(1) 8,172,944 Lbs. which includes Deck Drains (27,327 Lbs). This weight does not include over run or weld material.
(2) 3,394,056 Lbs. This weight does not include over run or weld material.
(3) Option 1: 10,615 Lbs. Studs.
Option 2: 14,394 Lbs. Channels plus 779 Lbs. Studs.
(4) Option 1: 36,110 Lbs. Studs.
Option 2: 33,197 Lbs. Channels plus 16,403 Lbs. Studs.
(5) 22 Units, complete
(6) 21 Units, complete
(7) 2,600 Lin. Ft. includes Clamps, Hangers and Fittings.
(8) 4,792 Lin. Ft. includes Bent Plate Troughs, Inlets, Clamps, Hangers, Fittings, etc.
(9) 2 Units, complete
(10) 1 Unit, complete
(11) 2 Units (Fitch-Type Energy Absorbing Barrier System)
(12) 1 Unit (Hi-Dro Cushion Cell Sandwich Unit)
(13) 89 Elements-Fitch Type (Non-Participating Item)
(14) Includes Electrical Distribution System, Roadway Heating System and Interconnections, Instrumentation System, Control Building, & Television Surveillance System.
Each of these items is a lump sum bid, see sheet D2, Drawing No. 18575

SUBSTRUCTURE

ESTIMATE OF QUANTITIES

ITEM	UNIT	SHEETS PREFIXED: A	C	TOTAL
Concrete, Class "AA"	Cu. Yd.		105.2	105.2
Concrete, Class "A"	Cu. Yd.	5,658.9	3,917.6	9,576.5
Steel Reinforcement	Lbs.	720,554	710,989	1,431,543
Structure Exc, Common	Cu. Yd.	6,722	5,716	12,438
End Bent Backfill	Cu. Yd.		592	592
Remove Exist. Monoliths	Lump Sum	(15)		L.S.
9" Seal Strip	Lin. Ft.	503		503
Dowel Bolts with Anchors	Each	613		613
Pile Anchorages	Each		370	370
Piles, 12BP53 Furnish	Lin. Ft.	18,611	3,976	22,587
Piles, 12BP53 Drive	Lin. Ft.	18,572	2,002	20,574
Piles, Option A-F, Furnish	Lin. Ft.	28,197	18,851	47,048
Piles, Option A-F, Drive	Lin. Ft.	21,030	18,613	39,643
Pile Loading Test	Each	3	1	4
Placing Piles thru Fill:				
Method A, Catagory A	Lin. Ft.	1,089	494	1,583
Method A, Catagory B	Lin. Ft.	202	492	694
Method A, Catagory C	Lin. Ft.	5,915	1,226	7,141
Method B	Cu. Yd.	9,852		9,852
4" Concrete Slopewall	Sq. Yd.		401	401

(15) 4 Monoliths and 1 Railroad Closure

* NOTE FOR STANDARD DRAWINGS:

Since these plans were completed most of the Standard Drawings of the Division of Bridges have been modified and the Drawing Numbers have been changed.

Wherever the Old Numbers are shown in these plans, the New Number as shown below shall be substituted:

Old Number	New Number
P2-A	BPC-002
P20-A	BPC-005
P21-B	BPC-006
P22	BPC-007
P23-A	BPC-008
P24	BPC-009
P212A-A	BPS-003
H117E	BHA-009 & BHA-010
~~AWS3-A~~	~~▽ AWS3-A (3 sheets)~~
SP1	BGX-004 & BGX-005
RBC-001	RBC-001-01
AE2-D	BJE-002
SF2-B	SF2-B
CD2-A	BGX-006
H115-F	BHA-005 & BHA-006
	RFC-002 & RFG-005

SHEET A2a

GENERAL NOTES & ESTIMATE OF QUANTITIES

COMMONWEALTH OF KENTUCKY
DEPARTMENT OF HIGHWAYS
FRANKFORT
COUNTY OF
JEFFERSON

I64-13TH ST. TO 7TH ST.
LOUISVILLE — LEXINGTON ROAD

SP 56-273-11L

STATION 208+08 P. E. PROJECT NO. I 64-2(35) 3

CONSTRUCTION PROJECT NO.	MAINTENANCE PROJECT NO.	DRAWING NO.
		18572

LETTING DATE

NOTE: Wherever in the plans and specifications, the reference "Department" is used, it shall be construed to mean "Bureau".

SPECIFICATIONS: The Kentucky Department of Highways Standard Specifications for Road for Road and Bridge Construction, current edition with revisions, shall apply to this project.

DESIGN LOAD: This bridge is designed HS20-44 live load as specified in 1969 AASHO Specifications or alternate loading of two 24-kip axles spaced four feet apart, whichever produces the greater stress. Dead Load includes 20 Lbs/sq.ft. of roadway surface allowance for future wearing surface. This bridge is designed for a wind load based on a wind velocity of 84 m.p.h.

DESIGN STRESSES: For reinforced concrete use the following:

Class A	Class AA
f_s = 20,000 psi	f_s = 20,000 psi
f_c = 1,200 psi	f_c = 1,600 psi for other than slab
f'_c = 3,000 psi	f_c = 1,200 psi for deck slabs
u (for embed.) = 200 psi	f'_c = 4,000 psi
u (for Σ o) = 240 psi (Pier Ftgs. only)	u (for embed.) = 200 psi
u (for Σ o) = 300 psi (All others)	u (for Σ o) = 300 psi
n = 10	n = 8

DESIGN STRESSES: For structural steel:

For A36 Steel	f_s = 20,000 psi
For A440 and A441 Steel	
3/4" thick and under	f_s = 27,000 psi
Over 3/4" to 1 1/2" incl.	f_s = 25,000 psi
Over 1 1/2" to 4" incl.	f_s = 23,000 psi
For A588 Steel	
4" thick and under	f_s = 27,000 psi
For A514 Steel	
Up to 2 1/2" incl.	f_s = 53,000 psi
Over 2 1/2" to 4" incl.	f_s = 48,000 psi

STRUCTURE EXCAVATION: Removal of concrete boulders and concrete or stone masonry retaining walls, etc. down to the bottom of footing within the limits of structure excavation shall be classified as "Structure Excavation Common" in lieu of Section 105 of the Standard Specifications.

FOUNDATION PILE LOADS: 12BP53 Steel piles are designed for a maximum axial load at 70 tons per pile. Options A thru F concrete piles are designed for 60 tons per pile downward and 15 tons per pile uplift. Piles under the end bents have a design axial thrust of 33.4 tons per pile and a horizontal shear of 2.1 tons.

TYPES OF PILES: The contractor shall use 12BP53 Steel piles Standard Drawing P212A current edition, or Options A thru F as called for in the plans. Options A thru F shall be one of the following types:

Option A - Standard 14" Reinforced Concrete Pile, Standard Drawing P2, current edition.
Option B - 14" Cast-in-Place Concrete Pipe Pile, Seamless Steel or Welded Pipe Shell, Standard Drawing P-20, current edition.
Option C - 14" Cast-in-Place Concrete Pile, Fluted Steel Shell, Standard Drawing P-21, current edition.
Option D - 14" Cast-in-Place Concrete Pile, Corrugated Steel Step-Taper Shell, Standard Drawing P-22, current edition.
Option E - Standard Precast Prestressed 14" Concrete Pile, Standard Drawing P-23, current edition.
Option F - 14" Cast-in-Place Concrete Pile, Corrugated Steel Step-Uniform Diameter Shell, Standard Drawing P-24, current edition.
NOTE: Options D&F shall not be used in End Bents.

PILING: All 12BP53 Steel piles shall be driven to refusal or to solid rock. Option A thru F piles shall be driven to a tip elevation and to a minimum driving resistance to be determined by the load tests. The estimated pile tip elevations shown in the Plans have been determined from the Log of Borings and Standard Penetration Tests which were made by methods believed to be reliable. This data is furnished for information only and no guarantee as to the accuracy of the data or the interpretation of the soil exploration results is given.

PILE LOAD TESTS: Pile load tests shall be made on Pile Options A thru F where indicated in the Plans and in accordance with Special Provision No. 31 prior to driving any other permanent piles of this type. The test load shall be 120 tons. The tip elevations shall be as shown on the plans or as directed by the Engineer. All test piles shall be located so as to be a part of the finished structure. The contractor shall remove the overburden around each test pile to the bottom of footing before driving the test piles. If failure occurs before the maximum test load is reached or because of excessive settlement under full test load as prescribed above, the test load shall be removed, the pile spliced if necessary, redriven and another loading test performed as directed by the Engineer.

TEST PILES FOR LENGTH: Test piles shall be driven where designated in the Plans to determine the length required. The Contractor shall remove the overburden around each test pile to the bottom of the footing before driving the test piles. All test piles shall be located so as to become a part of the finished structure.

DRIVING PILES AND EXCAVATING FOR FLOODWALL AND ADJACENT FOOTINGS: Where called for in the Plans piling shall be prebored to the specified elevation and in accordance with the Special Notes for "Driving Piles Under Floodwall Monoliths and Adjacent Footings". When excavating for these specified footings extreme care shall be excuted so as not to disturb the existing monoliths. Piles shall be driven prior to excavating below bottom of floodwall footing elevation. The excavated earth shall be used in backfilling and shall be compactad to its original density.

PILES FOR FOOTING 37WB,38EB-GG,49EB-4,R1-13 AND R3-2: Those piles so designated on the plans shall be prebored to the specified elevation and in accordance with the Special Notes for "Driving Piles Under Floodwall Monoliths and Adjacent Footings".

PREBORING OF PILES: In various locals of the project difficulty in driving piles is predicted. Quantities for preboring for these piles are included in the Estimate of Quantities. Preboring shall be in accordance with the Special Notes for "Placing Piles thru Fill for the Riverside Parkway". The contractor should note that preboring does not relieve the Contractor from any damage to adjacent structures above or below ground due to driving piles. The exact location of all buried structures should be confirmed prior to preboring or driving piles. Any damage to existing structures is at the Contractor's expense.

COORDINATION WITH CONTRACTORS ON ADJACENT PROJECTS: In addition to the requirement of Article 1.5.6 of the Standard Specifications, this Contractor shall coordinate his work with that of Contractors on adjacent sections of this Project.

CONTROL OF THE WORK: In addition to the requirements of Article 1.5.9 of the Standard Specifications, subsequent to the Engineer's staking of the reference lines, centerlines or base lines for the various roadway elements of this Project, the Contractor shall stake out and verify the locations of each substructure unit for agreement with the positions shown in the Plans. Prior to fabrication of the structural steel, the Contractor shall again verify the locations of each substructure unit and the dimensions between centerlines of piers and between centerlines of columns to insure correct fit of the steelwork. In the event a discrepancy is found in any dimension, the Engineer shall be notified at once and no further work will be permitted until the discrepancy is corrected.

CONCRETE: Class "AA" Concrete is to be used for superstructure and for portions at end bent backwall and wingwalls above top of cap elevation. Class "A" Concrete for all other parts of the substructure, Floodwall monoliths and railroad crashwalls. Class "D" Concrete is to be used in proposed Pile Options A,B,C,D & F. Class "D" Modified is to be used in Pile Option E.

PLACING FILLS AT END BENTS: See Standard Drawing SF2, current edition.

CIRCULAR SECTION REINFORCED CONCRETE COLUMNS: This note modifies the requirement of Article 404.3.1-A and 403.3.8-A for pier columns of grade separation structures. The concrete shall be placed, finished and cured as specified in Article 404.3.1 except as required by the following:

(a) All forms for the circular section columns shall be made of metal or shall be plastic or plastic-lined so as to give the surface a true, smooth, cylindrical shape free from fins, joints and irregularities.

(b) The concrete shall be placed in, and carefully vibrated against, the forms to assure smooth surfaces without voids, honeycomb, air pockets or irregularities in the surface.

No extra payment will be made to the Contractor for the use of metal plastic or plastic-lined forms, nor for placing or finishing the concrete. The cost of furnishing the forms, placing the concrete, and finishing as specified shall be included in the unit price bid for Class "A" Concrete.

SLAB FORMS: Stay-in-place forms will not be permitted for the concrete bridge floors.

BEVELED EDGES: All exposed edges shall be beveled 7/8" unless otherwise shown.

STRUCTURAL STEEL: See Sheet A3 for "Structural Steel Notes".

PERMISSIBLE VARIATIONS: The lines of the finished concrete, except bridge floors shall not vary more than 1/4" in ten feet as measured from a straightedge, or vary from plan lines more than 0.1 percent of the distance between the extremities of the unit considered.

Any variations in excess of those permitted above will be, at the discretion of the Engineer, cause either for rejection and removal of the work as set out in Article 1.5.12 of the Specifications, or for a deduction from the monies due or which may become due the Contractor in an amount calculated by multiplying the volume of concrete in the portion of the structure in which such variation occurs by the unit bid price for concrete.

REINFORCEMENT: Dimensions shown from face of concrete to bars are clear distances. Spacing of bars is from center to center of bars.

SPIRAL REINFORCEMENT: Splices for spirals where desired by the Contractor shall be made with a minimum of one and one-half turns of spiral. No additional payment will be made for these splices, but the cost will be considered incidental to the cost of the developed length of spiral shown on the Plans. Spiral reinforcement shall meet the requirements of Section 641.5.0 of the Standard Specifications for one-half inch round steel wire, and Section 641.1.3 for 5/8 inch round plain bars.

GROUT: The cost of the grout under the sign support bases is to be included in the contract unit bid price bid for Class "AA" Concrete.

OVERHEAD SIGN SUPPORTS: The Overhead Sign Supports may be made of Aluminum or Galvanized Steel. Both materials may be used on this project at the discretion of the Contractor, however each individual overhead sign support shell be constructed of only one type material. Payment for the overhead sign supports shall be at the contract Lump Sum Bid for overhead sign supports and in addition to the overhead sign supports complete in place shall include the Z-bars and all hardware necessary for attaching the signs to the supports.

CONSTRUCTION IDENTIFICATION: The names of the Prime Contractor and the Subcontractor shall be imprinted in the concrete with one inch letters at a location designated by the Engineer. The Contractor shall furnish all plans, equipment and labor necessary to do the work for which no direct payment will be made.

MEMBRANE CURING COMPOUND: White pigmented curing compound shall be applied to the bridge deck in accordance with the Special Provision except that the membrane compound used shall have a resinous base.

LINSEED OIL PROTECTIVE COATING: Linseed Oil Protective Coating shall be applied in accordance with the Special Provision except that it shall only be applied to the bridge deck between the gutter lines.

HIGH-STRENGTH HANDRAIL: High-Strength Aluminum Handrail, in accordance with Standard Drawing H 117, current edition, shall be used.

END CAST CLOSURE PLUG AND CLOSURE PLATE: For details and Specifications for End Cast Closure Plug and Closure Plate See Standard Drawing H 115, current edition. Payment for furnishing and installing these items shall be included in the Contract Unit Price for Lin. Ft. of High Strength Handrail.

DRAIN PIPE: This note is in addition to the requirements of the Standard Specifications for pipe material. The drain pipe for the bridge floor drainage shall be:

Continuous weld or seamless steel pipe shall be standard weight, black pipe conforming with the applicable provisions of ASTM A53, current edition. It shall be weldable alloy steel containing a minimum of 0.75% copper and 1.5% nickel, by weight. It shall have the following minimum mechanical properties:

Tensile strength ..... 50,000 psi
Yield strength ..... 37,500 psi
Elongation in 2 inches ..... 30 percent

The pipe shall be of the size shown on the Plans and shall be painted in accordance with the requirements for shop and field painting Structural Steel.

The drain pipe will be measured in lineal feet on the centerline of the pipe. This item will be paid for at the unit price bid per lineal foot, which price shall include and be full payment for furnishing and installing, complete in place and accepted, all materials including weld material and welding, brackets, pipe clamps and hangers, fittings, connections, hardware and tools,paint and painting, equipment and incidentals necessary to complete the work. The triangular drain trough detailed on the ramp portion of the project will be measured in lineal feet on the centerline of the trough and will be paid for at the unit price bid per lineal foot for DRAIN PIPE, which price shall be considered as payment in full as specified herein.

SHOP DETAIL DRAWING: Shop Detail Drawings for the Drain Pipe Details will be required. Three sets of the shop drawings will be submitted to the Engineer for approval.

BILL OF INCIDENTAL MATERIAL: The quantities shown in the Bill of Incidental Material are approximate only and the contractor is responsible for furnishing enough material to complete the work in accordance with the Plans and Specifications. The cost of these items is to be included in the unit price bid for Class "AA" Concrete.

PAINT: All structural steel shall be cleaned and painted in accordance with the Special Provision for Blast Cleaning and Painting Structural Steel, current edition.

CLEARANCE: All falsework, bracing or forms shall have a minimum vertical clearance of 22 feet above the top of the highest rail, and a minimum horizontal clearance of 8 feet measured perpendicular to the centerline of the nearest track.

SET-RETARDING ADMIXTURES FOR DECK CONCRETE: Except as noted in the plans the deck pours of all units shall be made in one continuous pour. An admixture conforming to the requirements of Special Provision No. 36-A shall be added to the concrete for the bridge deck slabs to delay the initial set of the concrete so as to permit the placement and finishing of concrete in all spans of a continuous unit in a single continuous operation. The admixture and its use shall conform to the Special Provisions. The amount of delay shall be dependent on the quantity of admixture and the quantity used shall be carefully determined on the basis of temperature, relative humidity, wind conditions, and required placing time. The retarding action shall delay the initial set in each span until after the next adjacent span in the same continuous unit has been placed. The Contractor shall secure the Engineer's approval of the quantities of admixture to be used for each placement.

ANCHOR BOLT HOLES: Holes of depth and dimensions shown shall be drilled for anchor bolts or dowels, after base plates are properly set, by the superstructure contractor who shall be responsible for keeping holes dry in freezing weather. After base plates are properly set, anchor bolt holes drilled, and anchor bolts are placed in drilled holes, molten lead shall be poured in holes and packed until holes are completely filled flush to top of base plates. The cost of drilling anchor bolt holes, furnishing lead, and filling holes with molten lead shall be incidental to and included in the lump sum bid for structural steel.

CONSTRUCTION NOTE: The contractor shall arrange the work so as not to interfere with any of the railroads in the area (Pennsylvania Central Transportation Company, Illinois Central Railroad Company and the Southern Railway System). The Contractor shall arrange with the respective railroad to provide flag protection at the Contractor's expense. For footings adjacent to the railroad the Contractor must provide adequate shoring to prevent settlement of the track and or bed. Plans for the shoring shall be submitted for approval to the Department of Highways and to the respective railroads, and no work shall be performed prior to approval by the Engineer and the respective railroad.

ELEVATIONS: All elevations are based on U.S.C. & G.S. 1929 (1950 Releveling) Datum.

DIMENSIONS: Dimensions shown on the Plans are horizontal and for a normal temperature of 60 degrees Fahrenheit with dead load on the structure. For the true length of the members the dimensions should be corrected for grade and or superelevations, Tapes used by the Contractor, including the Structural Steel fabricator and erector, shall have been calibrated correctly with the U.S. Bureau of Standards to insure correct fit to the steel work.

DAMAGE TO EXISTING SEWERS OR FLOODWALLS: If any sewer or floodwall is damaged due to the Contractor's operations, the damaged structure shall be repaired to its original condition at the Contractor's expense, subject to approval by the Metropolitan Sewer District or the U.S. Corps of Engineers, respectively.

CONCRETE FINISH: Exposed surfaces of substructure and superstructure shall be finished in accordance with Special Provision No. 99. In addition to the areas listed in Special Provision No. 99 required to receive an Approved Masonry Coating Finish, the following areas are to receive the same treatment: (1) Exposed portion of pier columns (2) Exposed portion of end bents below the bridge seats (3) Exposed portion of floodwall monoliths

COORDINATION OF WORK BETWEEN THE CONTRACTOR AND THE LOUISVILLE GAS AND ELECTRIC CO.: The contractor will coordinate his work with that of the Louisville Gas and Electric Company while they are preforming their work in connection with this Project.

DESIGNED BY: RHC CHECKED BY: Block DATE: Mar 72 REVISED
DETAILED BY: CHECKED BY: DATE: REVISED
TRACED BY: CRE CHECKED BY: RHC & Block DATE: Mar 72 REVISED

SHEET A2

COMMONWEALTH OF KENTUCKY
DEPARTMENT OF HIGHWAYS
FRANKFORT
COUNTY OF
JEFFERSON
I64-13TH ST. TO 7TH ST.
LOUISVILLE - LEXINGTON ROAD
STATION 208+08 SP 56-273-1 IL
P. E. PROJECT NO. I 64-2 (35) 3

CONSTRUCTION PROJECT NO.	MAINTENANCE PROJECT NO.	DRAWING NO.
		18572

GENERAL NOTES

LETTING DATE

STRUCTURAL STEEL NOTES: These notes are modifications of and additions to Section 408 of the Standard Specifications. Division, Section and Article numbers and letters appearing herein refer to portions of the Standard Specifications bearing the same designation.

MATERIAL SPECIFICATIONS: The following ASTM Designations shall govern the materials furnished:

A27-71	Carbon Steel Castings. Grade 70-36
A36-70a	Structural Steel
A48-64(1971)	Gray Iron Castings Class 30A
A53-71a	Welded and Seamless Steel Pipe
A108-69	Cold-Finished Carbon Steel Bars and Shafting (Grade 1016 to 1030 inclusive)
A235-67	Carbon Steel Forging (Class G)
A237-67	Alloy Steel Forgings (Class A)
A242-70a	High-Strength Low Alloy Structural Steel
A307-68	Low Carbon Steel Bolts
A325-71a	High-Strength Bolts
A606-71	High-Strength Low Alloy Hot Rolled Steel Sheets and Strips (Type 2)
A440-70a	High-Strength Structural Steel
A441-70a	High-Strength Low-Alloy Structural Steel
A514-70	High-Yield-Strength Quenched & Tempered Alloy Steel Plate
A588-71	High-Strength Low-Alloy Structural Steel
B29-55 (1971)	Sheet Lead and Pig Lead
A536-71	Ductile Iron Castings Grade 60-40-18
A276-71	Stainless and Heat-Resisting Steel Bars, and Shapes

HIGH STRENGTH LOW ALLOY STRUCTURAL STEEL: High Strength Low Alloy Structural Steel shall conform to ASTM Specification A588, current edition, for Grades A through G. When furnishing Grades A,B,C,F & G informational reporting shall indicate that Charpy V-notch test values of 15 foot-pounds are obtained. When furnishing Grades D and E acceptance approval will not be granted until adequate data has been supplied showing that the material produced under production control procedures fully meets the Charpy V-notch requirement of 15 foot-pounds at 40° Fahrenheit, minumum elongation requirements and weldability properties.

SHOP DETAIL DRAWINGS: The Contractor shall submit shop detail drawings of all structural steel to the Bridge Engineer for approval in accordance with the Specifications. After the fabrication is completed and accepted for shipment the Contractor shall furnish the Department one full set of linen or drafting film tracings of approved correct shop drawings, including the welding procedures. No direct payment will be made for the record tracings, but the cost shall be included in the lump sum bid for "Structural Steel".

Any material ordered or work done by the Contractor before the shop drawings, including the welding procedures, are approved shall be at his own risk. Qualification Tests of all welding procedures shall be completed by the Contractor and approved by the Engineer prior to the final approval of shop drawings and start of fabrication.

DESIGN: Shop welded construction is intended for all built-up members unless otherwise indicated. High Strength Bolts will be used for shop and field connection as shown on the Plans.

CONNECTIONS: Unless otherwise provided on the Plans all connections shall be 7/8" diameter high strength bolted connections. All high strength bolted connections are friction type, and shall be in accordance with Article 408.3.1-F of the Standard Specifications. Tightening of the bolts shall be done with properly calibrated wrenches. Connections for cross frames, diaphrams, longitudinal bracing, expansion joints, and other minor members may be punched or drilled full size without assembly, subject to the requirements of the Specifications for general reaming.

ADDITIONAL FIELD SPLICES: If additional field splices are permitted they shall be at the Contractor's expense, and shall be included in the lump sum bid for "Structural Steel".

WELDS: All welding shall conform to Specifications for Welded Highway and Railway Bridges, AWS D2.0-69 of the American Welding Society with modifications and additions as stated on the Plans and Standard drawing AWS3, current edition.

PROHIBITED FIELD WELDING: Except as noted on the Plans, no welding of any nature shall be performed on the load carrying members of the bridge without the written consent of the Director, Division of Bridges, or his authorized representative, and then only in the manner and at the locations designated in the authorization.

WELDING PROCEDURE: Qualification tests of all welding procedures shall be completed by the Contractor and approved by the Engineer prior to the final approval of the shop drawings and Weling Procedure and the start of fabrication.

CAMBER AND GIRDER WEB PLATES: Web plates shall be cut to provide for camber as indicated on the Plans. Provide for possible warpage due to extra heat in top flange by virtue of shear connector. Curved girders shall be fabricated to the curved alignment with webs bent to the radius shown on the Plans. Optional shop welded web plate splices for the girders may be made by the Contractor, and shall be located on shop details. Maintain a minimum distance of three feet (3') from any flange welded splice. Such splices will not be paid for, but the cost thereof shall be included in the lump sum price bid for "Structural Steel".

Girders which do not conform to plan camber and grade in the erected position shall be considered as requiring either an adjustment in depth of concrete haunch over the steel supporting members at no additional cost to the State, or a reworking of the girder camber to meet the plan grade and slab thickness at no additional cost to the State. However, in no case shall the shear connectors be allowed to penetrate the slab less than two inches.

GIRDER FLANGES: Prior to approval of the shop detail drawings, the Contractor may request permission from the Engineer to extend a thicker flange plate in the direction of a smaller to eliminate one or more butt welded flange splices. No extra payment will be made for the additional steel weight. Curved girder flange plates shall be cut to the curvature shown on the Plans, and shall not be curved by heat.

SHEAR CONNECTORS:

(a) Optional Types - The Contractor shall use one of the following options throughout this structure as called for in the plans.

Option 1 - 3/4" x 4" studs

Option 2 - 4" channel @ 5.4 lbs./ft.

If the Contractor wishes to use other than 3/4" x 4" stud shear connectors as shown in the Plans, the proposed arrangement shall be submitted for approval with the shop plans.

(b) Materials -

Option: 1 - The studs shall be headed steel bars complying with Grade 1015, ASTM A108 and qualified in accordance with AWS D2.0-69, Section 4, Part VI on Requirements for Stud Welding.

Option 2 - The channels shall comply with ASTM A36.

(c) Welding - The shear connectors shall be shop or field welded to the tops os the steel girders as shown in the Plans. Welding procedures shall conform to the applicable requirements of AWS including AWS D2.0-69, Section 4, Part VI Stud Welding.

(d) Detail drawings will be required for the shear connectors in accordance with Article 408.3.1-A of the Specifications.

(e) Lump Sum Bid for "Shear Connectors" shall be full payment for all shear connectors welding and welding materials, equipment, tools, labor, detail drawings, patent royalties, and materials and incidentals necessary to place shear connectors on the girders in accordance with the Plans.

PAYMENT FOR STRUCTURAL STEEL: The Lump Sum Bid for structural steel shall be full payment for all structural steel (except that for Expansion Joints), bolts, washers, steel pins, cast iron, lead plates, molten lead, welding and welding materials, floor drains, paint and all lobor and materials necessary to erect the steel in accordance with the Plan & specifications. The approximate weight of structural steel shown in the Estimate of Quantities does not include overrun or weld material.

UNITS I THRU VII WESTBOUND AND I THRU VI EASTBOUND: Section 408.3.1-C of the Standard Specifications shall govern the reaming of field connections for all girders (G1,G2, etc.), floorbeams and 24WF stringers. Where called for in the Plans, all members are to be cambered for full dead load. 24WF Stringers do not have to be cambered, but any natural camber should be turned so as to conform with the vertical curve of the roadway. Floorbeams with a signficant amount of deflection are cambered for full deadload. At Floorbeams-girder connections the ends are cambered such that under full deadload the girders will be vertical.

UNITS VIII WESTBOUND AND VII AND VIII EASTBOUND:

STRINGERS: The stringers are designed as continuous steel stringers for steel dead load and the weight of the concrete slab; and as continuous composite stringers in positive moment for live load and the weight of curbs, plinth, railing, future wearing surface, etc. Temporary supports or shoring will not be permitted under the stringers when taking top of steel elevations or when placing the concrete slab.

SHOP ASSEMBLING: General reaming of holes for each bolted splice and connection of the continuous stringers shall be required. Each continuous stringer unit shall be shop assembled with parts adjusted to line, elevation, camber and fit for drilling or reaming. For the splices and connections of the continuous stringers to the pier girders, the stringers and pier girders may be fully assembled in the shop or, alternatively, each continuous stringer may be assembled with templates equal to the pier girder web thickness between the end connections. A minimum of two spans of each continuous stringer shall be assembled for reaming and the splices and connections at each pier girder reamed successively until reaming is completed for a continuous unit.

Milled ends of the compression flange splice plates shall be brought to full bearing aganist the pier girder web or template before reaming is started.

The continuous stringers are designed as continuous for their dead load and shall be supported during reaming. Stringers shall remain assembled for inspection by the Department of Highways inspector and are to be match marked while assembled.

ERECTION AND FIELD ASSEMBLY: As soon as each stringer is erected between pier girders the top flange splices shall be pinned and bolted as required by Article 408.3.2-F. The milled end of the bottom flange splice plate shall be brought into full bearing against the pier girder web and immediately pinned and bolted as required for continuity of the spans.

UNITS AT RAMPS 1, 2, 2A, 3 AND 4:

STRINGERS: The longitudinal girders are designed as continuous steel stringers for steel dead load, concrete dead load, future wearing surface dead load, and live load plus impact. Temporary supports or shoring will not be permitted under the stringers when taking top of steel elevations or when placing the concrete slab.

CAMBER: Where called for in the plans, all members are to be cambered for full dead load. Pier Girders and floor beams do not have to be cambered. Any natural camber in floor beams should be turned upward to reduce dead load deflection of the floor beams. At floor beam girder connections the end of the floor beams shall be cut so that the ends of the floor beams will be vertical for the given superelevation.

SHOP ASSEMBLING: Section 408.3.1-C of the Standard Specifications shall govern the reaming of field connections for all girders (G1,G2 etc.), pier girders and floor beams. Each continuous unit shall be shop assembled with parts adjusted to line, elevation, camber and fit for drilling or reaming, or, alternatively, for Unit R2-II, each continuous stringer may be assembled with templates equal to the pier girder web thickness between the end connections. In Unit R2-II. milled ends of the compression flange splice plates shall be brought to full bearing against the pier girder web or template before reaming is started. A minimum of two spans of each continuous stringer shall be assembled for reaming and the splices and connections at each pier girder reamed successively until reaming is completed for a continuous unit.

The continuous stringers are designed as continuous for their dead load and shall be thus supported during reaming. Stringers shall remain assembled for inspection by the Department of Highways inspector and are to be match marked while assembled.

ERECTION AND FIELD ASSEMBLY: In Unit R2-II, as soon as each stringer is erected between pier girders the top flange splice shall be pinned and bolted as required by Article 408.3.2-F and the milled end of the bottom flange splice plate shall be brought into full bearing against the pier girder web and immediately pinned and bolted as required for continuity of the spans.

NONDESTRUCTIVE TESTING: The third paragraph of Article 607 (c) of AWS 3, current edition, is revised as shown below. This revision applies only to longitudinal girders of Ramps 1, 2,2A,3 and 4.

All splices shall be tested except that on girder webs only 1/6 of the web depth, beginning at the points of maximum stress and 25 percent of the remainder of the web depth need be tested.

SHOP ASSEMBLY (ALL UNITS): In lieu of subpunching or subdrilling holes and reaming to full size with the parts assembled, electronic computer or numerical tape controlled drills may be used to drill holes full size. Holes drilled by this method shall be located within a tolerance whereby 85 percent of the holes in any contiguous group shall show no offset greater than 1/32 inch between adjacent thickness of metal. The Contractor shall submit to the Engineer for approval his proposed procedure for drilling the holes and assuring correct fit of the members. In the event that the Contractor drills the holes full-size by electronic computer or numerical tape controlled methods at least twenty-five (25) percent of the splices shall be assembled in the shop, to prove adequacy and accuracy of the method.

If the holes do not match, or if camber and alignment are not correct in any one assembly all spans shall be assembled and reamed, if necessary to secure correct fit.

Also in lieu of sub-punching or sub-drilling holes for the field bolted plate girder splices and reaming holes to full size while the girders are completely assembled in the shop, the field splice connection holes may be drilled full size in the solid material by inserting the drill through a pre-drilled splice plate or template in its final position in the connection (web-to-web and flange-to-flange). This work may be done immediately prior to and during the flange-to-web fitting operation with a minimum of three adjoining girder sections worked together. The joints shall be match-marked prior to disassembly. The Contractor shall submit complete details of his proposed method of drilling and control of the assembly to the Engineer for approval.

MEASUREMENT OF EXISTING STEEL:

The Contractor shall determine in the field the locations, elevations and details for connecting new structural steel at existing Piers 25 and 55. In the event that he finds discrepancies in any dimension from those shown in these plans, he shall notify the Engineer at once and shall not proceed with any work until the Engineer provides information. Any delay in the work and adjusting of such discrepancies shall not be a cause for additional payment.

DESIGNED BY RHC CHECKED BY Block DATE 3-72 REVISED
DETAILED BY CBF CHECKED BY RHC & Block DATE 3-72 REVISED
TRACED BY CBF CHECKED BY DATE 3-72 REVISED

SHEET A3

COMMONWEALTH OF KENTUCKY
DEPARTMENT OF HIGHWAYS
FRANKFORT
COUNTY OF
JEFFERSON
I64-13TH ST. TO 7TH ST.
LOUISVILLE- LEXINGTON ROAD SP 56-273-11L
STATION 208+08 P. E. PROJECT NO. I 64-2 (35) 3

CONSTRUCTION PROJECT NO.	MAINTENANCE PROJECT NO.	DRAWING NO.
		18572

STRUCTURAL STEEL NOTES

FED. ROAD DIST.	STATE	FED. AID PROJ. NO.	FISCAL YEAR	SHEET NO.	TOTAL SHEETS
7	KY.				

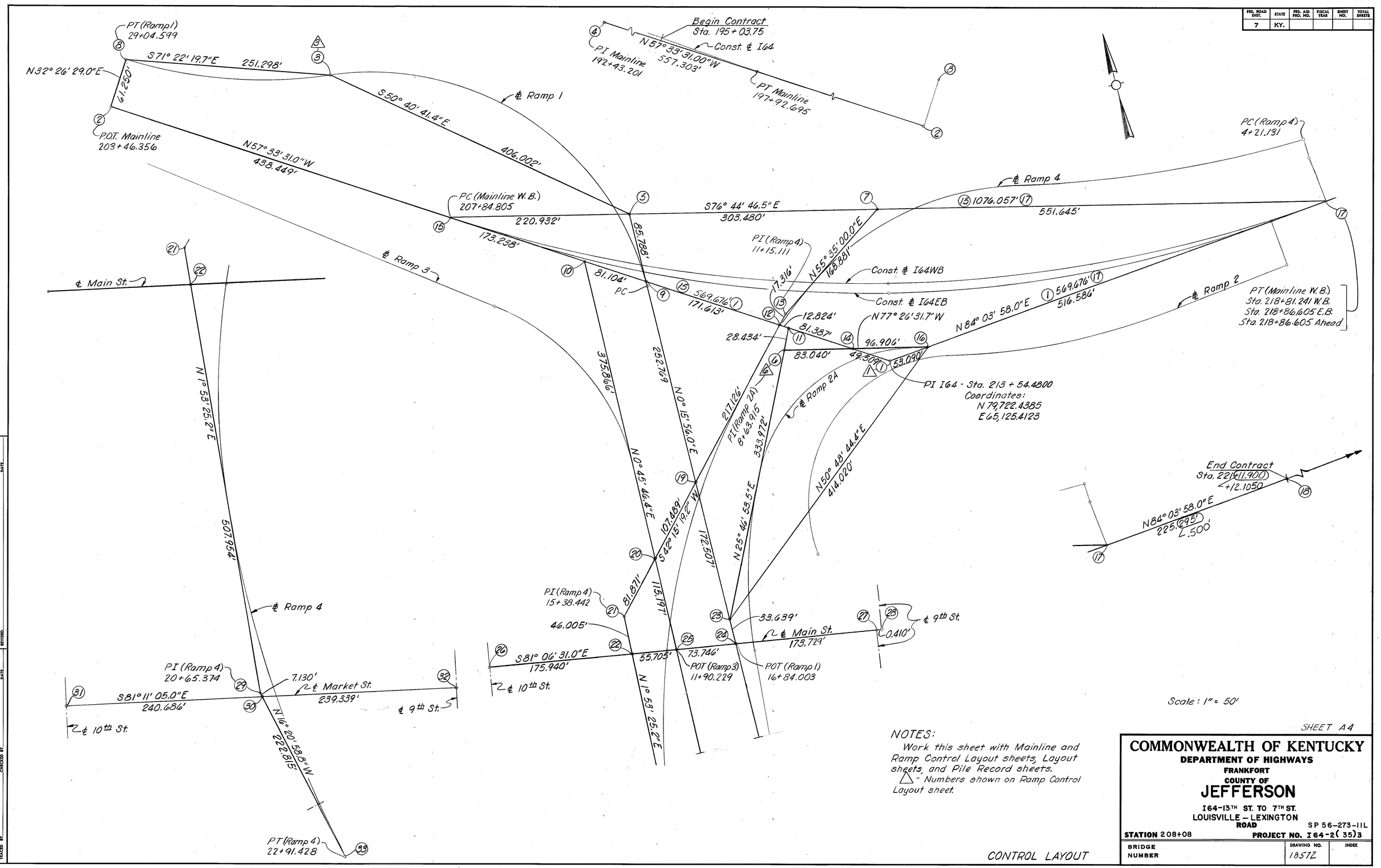

NOTES:

Work this sheet with Mainline and Ramp Control Layout sheets, Layout sheets, and Pile Record sheets.

△ - Numbers shown on Ramp Control Layout sheet.

CONTROL LAYOUT

SHEET A4

DESIGNED BY:	CHECKED BY:	DATE	REVISED	DATE
DETAILED BY: EW	CHECKED BY:	DATE	REVISED	DATE
TRACED BY:	CHECKED BY:	DATE	REVISED	DATE

Dist. between ⑦ & ⑧ and Sta. of ⑧ DATE 6/4/73 JEB

COMMONWEALTH OF KENTUCKY

DEPARTMENT OF HIGHWAYS

FRANKFORT

COUNTY OF

JEFFERSON

I64-13TH ST. TO 7TH ST.

LOUISVILLE – LEXINGTON ROAD

SP 56-273-11L

STATION 208+08 **PROJECT NO.** I64-2(35)3

BRIDGE NUMBER	DRAWING NO.	INDEX
	18572	

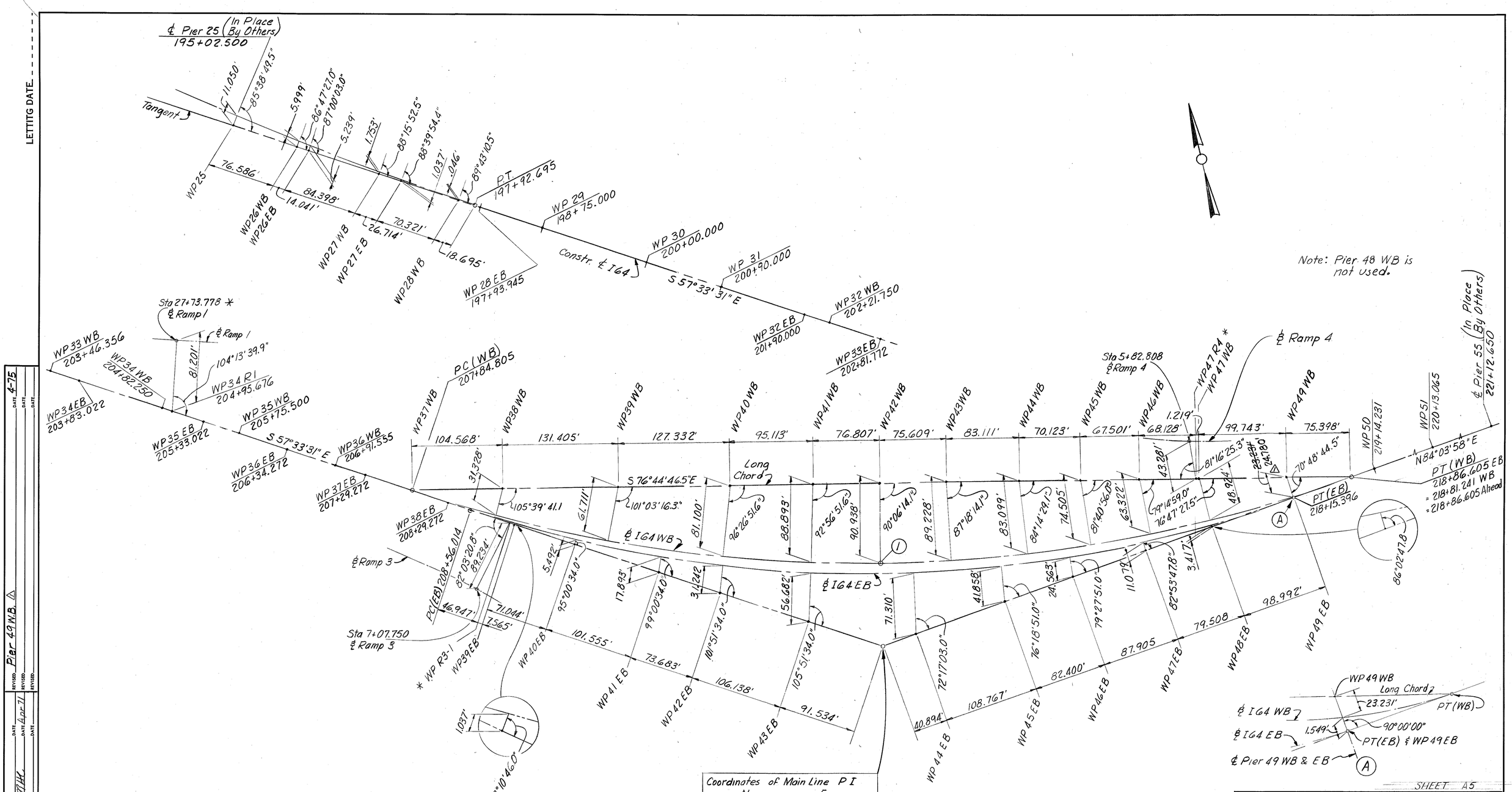

Coordinates of Main Line PI	
N	E
79722.4385	65125.4123

The above coordinates were used in computer computations. Prefix all North Coordinates with 2 and all East Coordinates with 5 to convert to Kentucky Lambert Grid Coordinates.

Work this Sheet with LAYOUT and Pile Record Sheets.
Angles given are between ℄ Pier and Work Line.
* Indicates point also located off of Ramp Work Line.
(1) Intersection ℄ Pier and Base Line. (Typical)

MAINLINE CONTROL LAYOUT

COMMONWEALTH OF KENTUCKY
DEPARTMENT OF HIGHWAYS
FRANKFORT
COUNTY OF
JEFFERSON

I64-13TH ST. TO 7TH ST.
LOUISVILLE – LEXINGTON ROAD

SP 56-273-11L

STATION 208+08 | P.E. PROJECT NO. I 64-2 (35) 3

CONSTRUCTION PROJECT NO.	MAINTENANCE PROJECT NO.	DRAWING NO.
		18572

LETTING DATE

DESIGNED BY: CHECKED BY: DATE
DETAILED BY: TB Clark CHECKED BY: DATE Apr 71
TRACED BY: CHECKED BY: DATE
REVISED: Pier 49 W.B. △ DATE 4-75
REVISED: DATE
REVISED: DATE

FED. ROAD DIST.	STATE	FED. AID PROJ. NO.	FISCAL YEAR	SHEET NO.	TOTAL SHEETS
7	KY.				

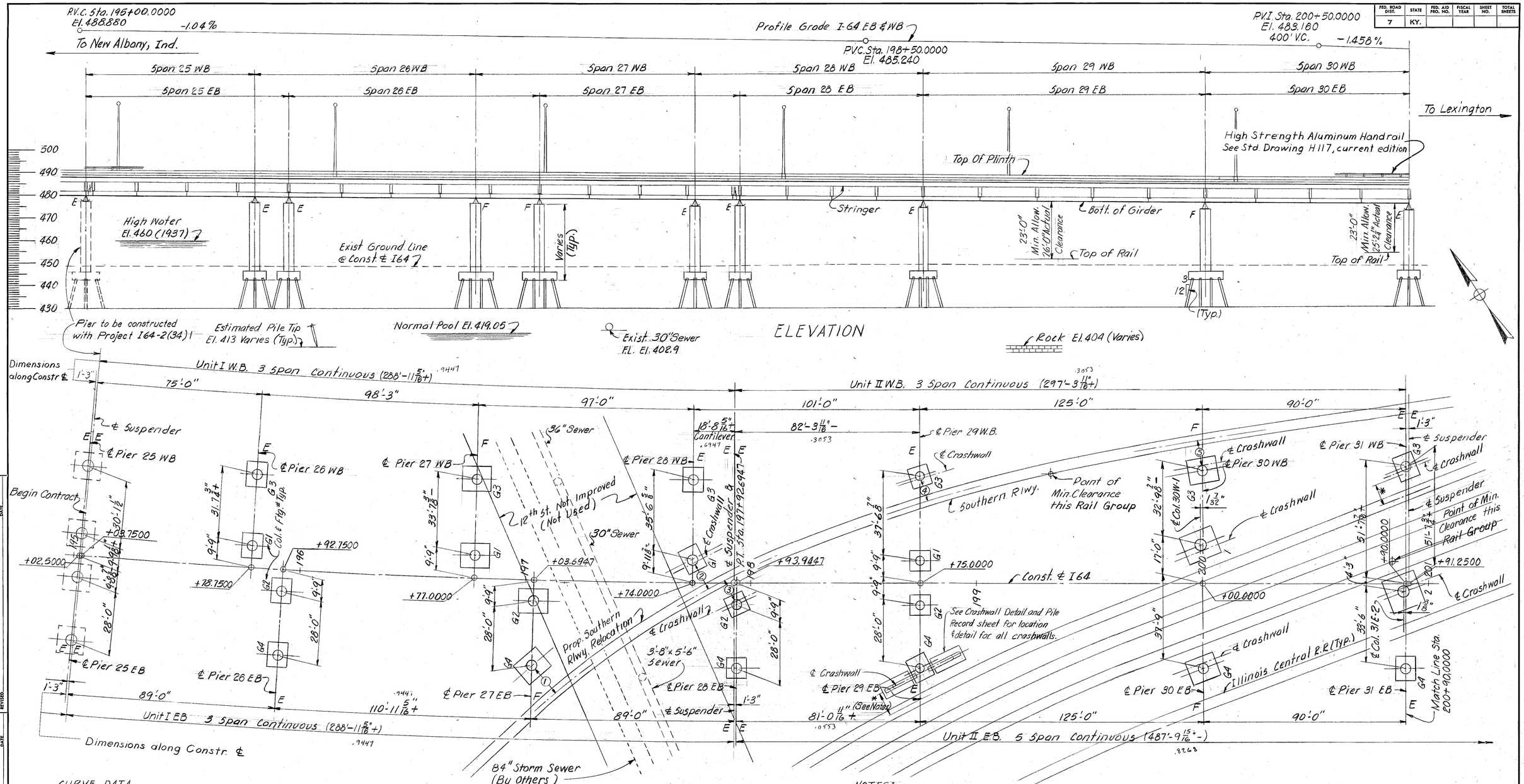

CURVE DATA
MAIN LINE
D = 1° 30'-00"
Δ = 16° 36'-07"
R = 3819.7186'
T = 557.3029'
L = 1106.7963'
E = 40.4416'
P.I. = 192+43.2013'

PLAN

Southern Railway Clearance
1. 13.7' Clear
2. 12.3' Clear
3. 10.0' Clear
4. 10.0' Clear
5. 11.2' Clear

NOTES:
EB denotes Eastbound, WB denotes Westbound.

E denotes Expansion, F denotes Fixed.
Span lengths are measured along ℄ I64 except as noted.
*8'-6" plus allowance for overhang and tilt on curves (85' car - 60" between trucks and 14' high.)
Pier protection crashwalls required where face of column is less than 12'-6" from ℄ track.
All piers normal or radial to ℄ I64, except as noted.
Existing Railroad Tracks to be removed are not shown.

LAYOUT
STA. 195+02.50 to STA. 200+90.00

SHEET A6

COMMONWEALTH OF KENTUCKY
DEPARTMENT OF HIGHWAYS
FRANKFORT
COUNTY OF
JEFFERSON
I 64 - 13TH ST. TO 7TH ST.
LOUISVILLE – LEXINGTON
ROAD

STATION 208+08 PROJECT NO. I 64-2(35)3 SP 56-273-IIL

BRIDGE NUMBER | DRAWING NO. 18572 | INDEX

DESIGNED BY McFarland CHECKED BY EW
DETAILED BY CHECKED BY
TRACED BY CHECKED BY
REVISED DATE
REVISED DATE
REVISED DATE

DIETZGEN NO. 136-8 AGEPROOF

FED. ROAD DIST.	STATE	FED. AID PROJ. NO.	FISCAL YEAR	SHEET NO.	TOTAL SHEETS
7	KY.				

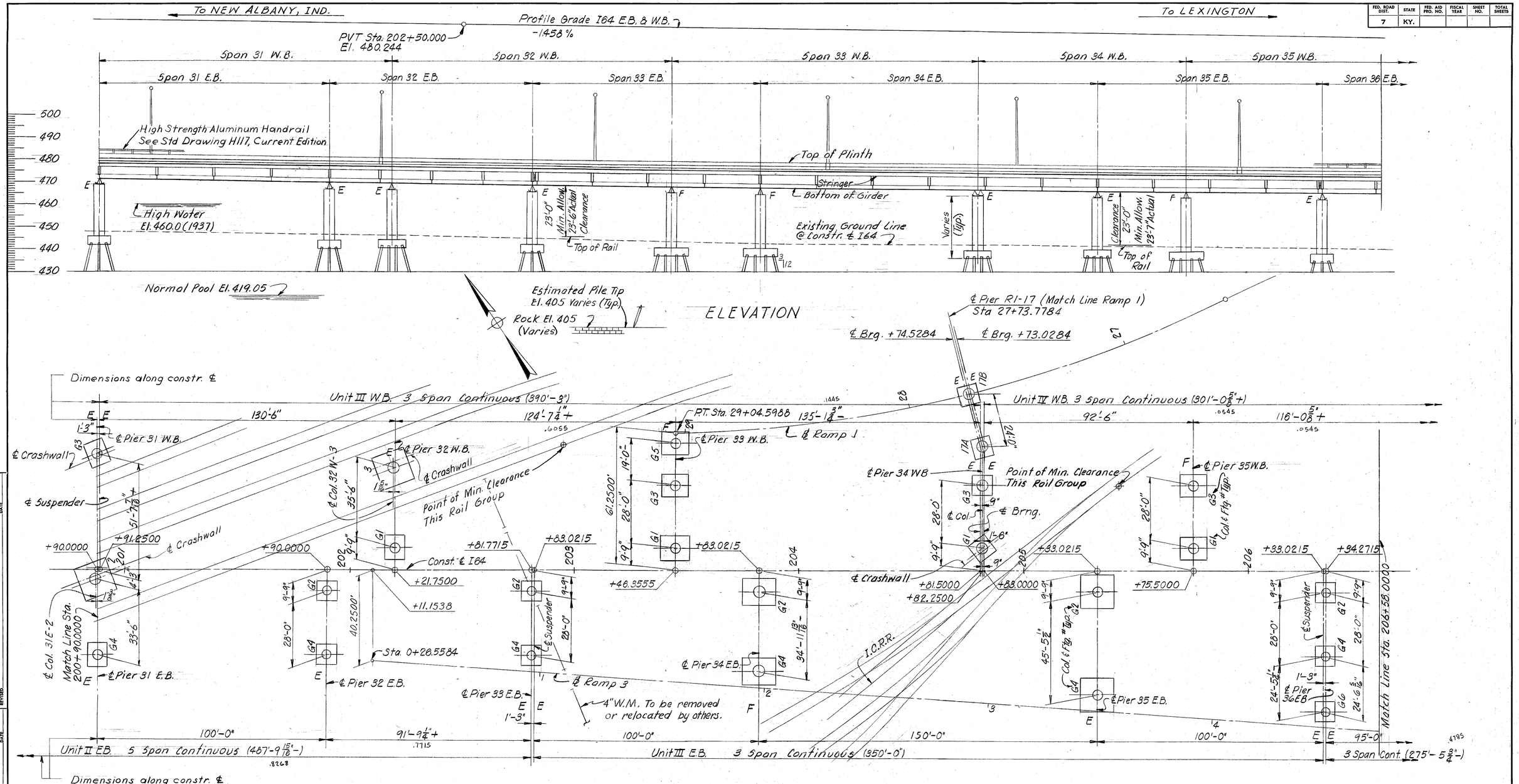

PLAN

LAYOUT
STA. 200+90.00 to STA. 206+58.00

SHEET A7

COMMONWEALTH OF KENTUCKY
DEPARTMENT OF HIGHWAYS
FRANKFORT
COUNTY OF
JEFFERSON
I 64-13TH ST. TO 7TH ST.
LOUISVILLE – LEXINGTON
ROAD

SP 56-273-11L

STATION 208+08 PROJECT NO. I 64-2(35)3

BRIDGE NUMBER	DRAWING NO.	INDEX
	18572	

DESIGNED BY: M.S. Forland CHECKED BY: EW
DETAILED BY: CHECKED BY:
TRACED BY: CHECKED BY:
DATE REVISED DATE REVISED DATE REVISED
DATE REVISED DATE REVISED DATE REVISED

GIETZGEN NO. 138-3 AGEPROOF

FED. ROAD DIST.	STATE	FED. AID PROJ. NO.	FISCAL YEAR	SHEET NO.	TOTAL SHEETS
7	KY.				

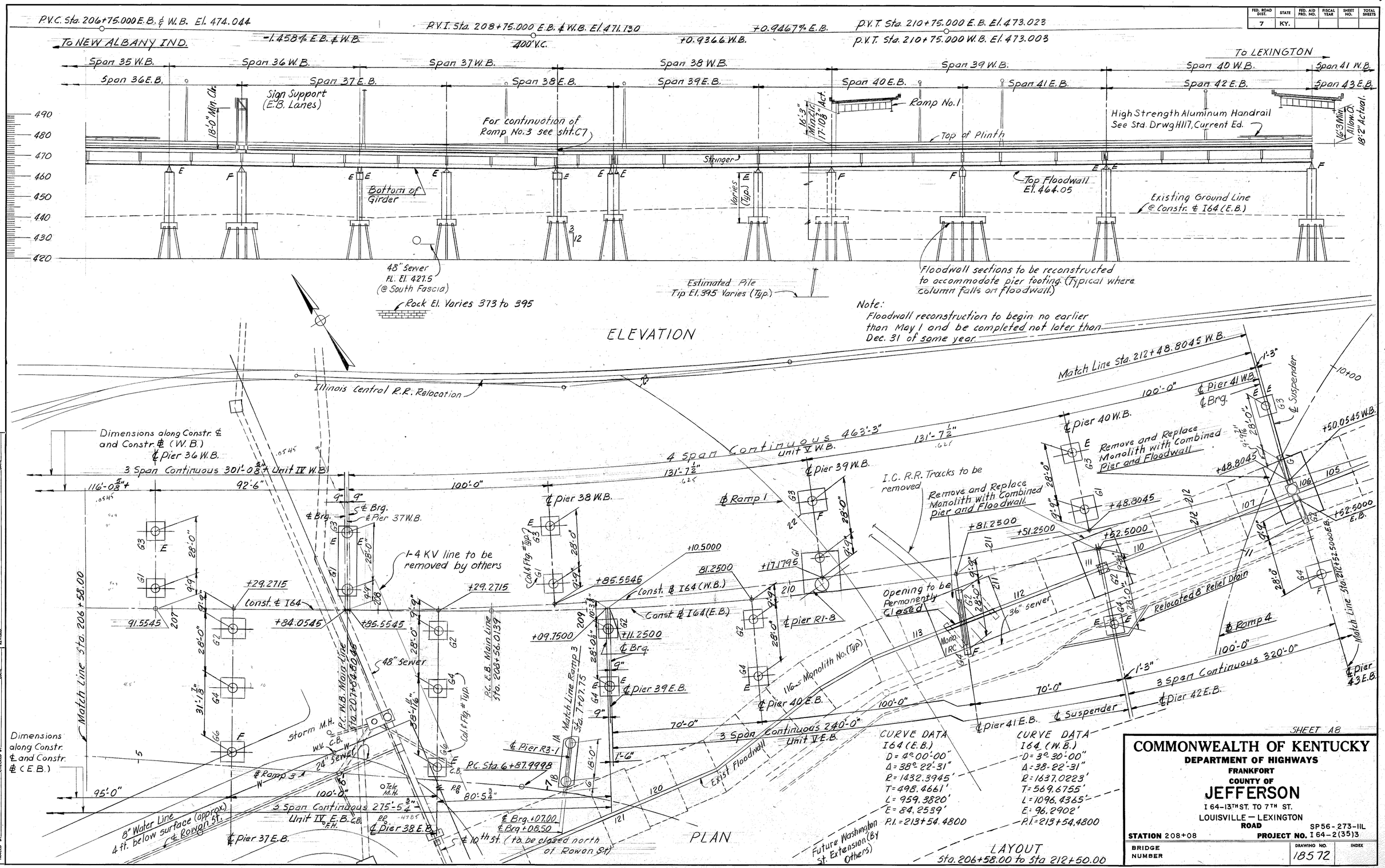

SHEET A8

COMMONWEALTH OF KENTUCKY
DEPARTMENT OF HIGHWAYS
FRANKFORT

COUNTY OF
JEFFERSON

I 64-13TH ST. TO 7TH ST.

LOUISVILLE — LEXINGTON ROAD

STATION 208+08 — PROJECT NO. I 64-2(35)3 — SP56-273-IIL

BRIDGE NUMBER	DRAWING NO.	INDEX
	18572	

DESIGNED BY: M.T. Fortland — DETAILED BY: — TRACED BY: — CHECKED BY: (E.W.) — CHECKED BY: — CHECKED BY: — DATE — REVISED

DIETZGEN NO. 138-8 AGEPROOF

FED. ROAD DIST.	STATE	FED. AID PROJ. NO.	FISCAL YEAR	SHEET NO.	TOTAL SHEETS
7	KY.				

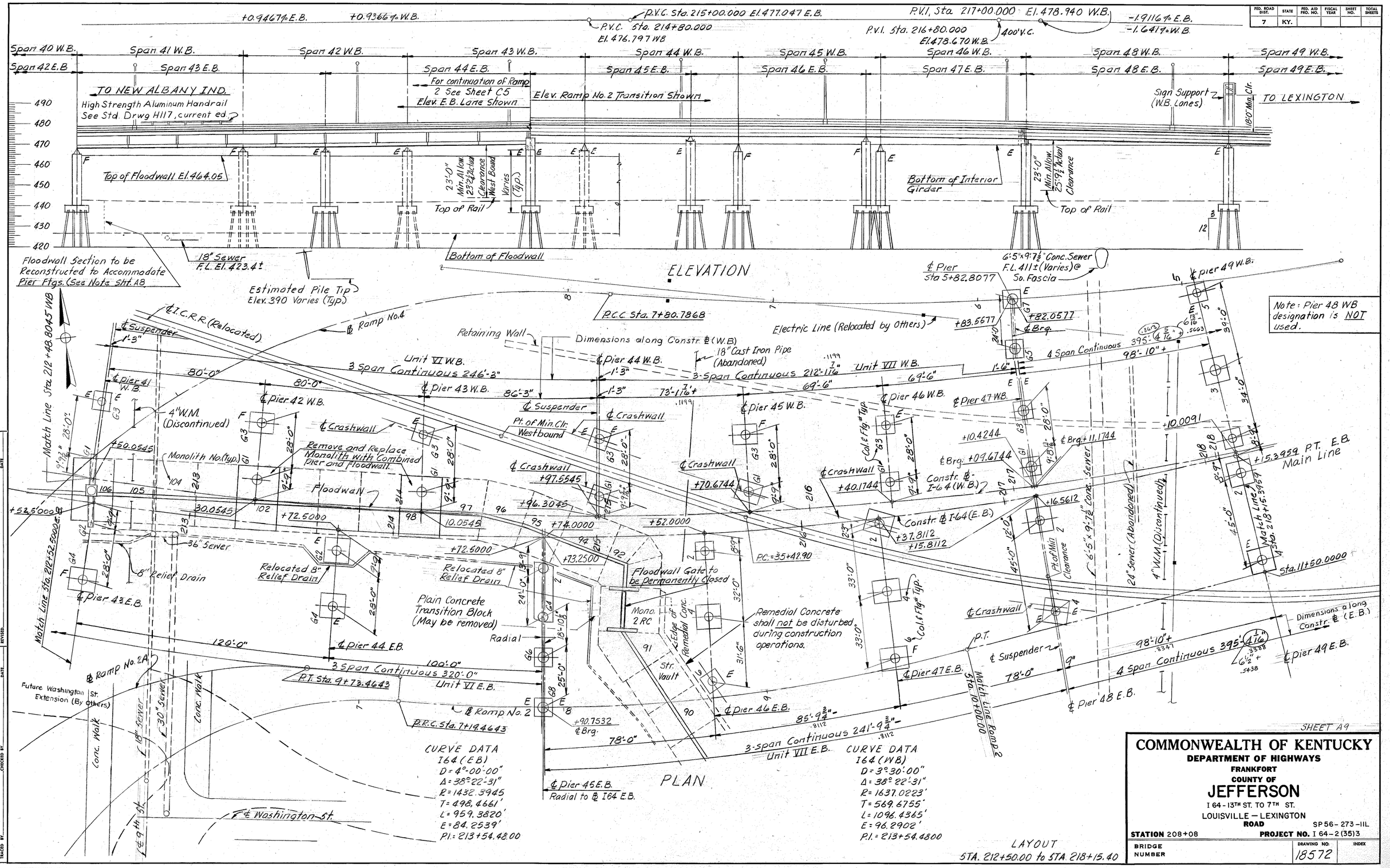

SHEET A9

COMMONWEALTH OF KENTUCKY
DEPARTMENT OF HIGHWAYS
FRANKFORT

COUNTY OF
JEFFERSON

I 64 - 13TH ST. TO 7TH ST.
LOUISVILLE — LEXINGTON
ROAD

SP 56 - 273 - IIL

STATION 208+08 PROJECT NO. I 64-2 (35)3

BRIDGE NUMBER | DRAWING NO. 18572 | INDEX

DESIGNED BY: M.T. Forland	CHECKED BY: R.B.S.	DATE:	REVISED: Length of 4 Span Cont. Unit	DATE: 6/4/73
DETAILED BY:	CHECKED BY:	DATE: 1/19/72	REVISED:	DATE:
TRACED BY:	CHECKED BY:	DATE:	REVISED:	DATE:

©IETZGEN NO. 138-8 AGEPROOF

FED. ROAD DIST.	STATE	FED. AID PROJ. NO.	FISCAL YEAR	SHEET NO.	TOTAL SHEETS
7	KY.				

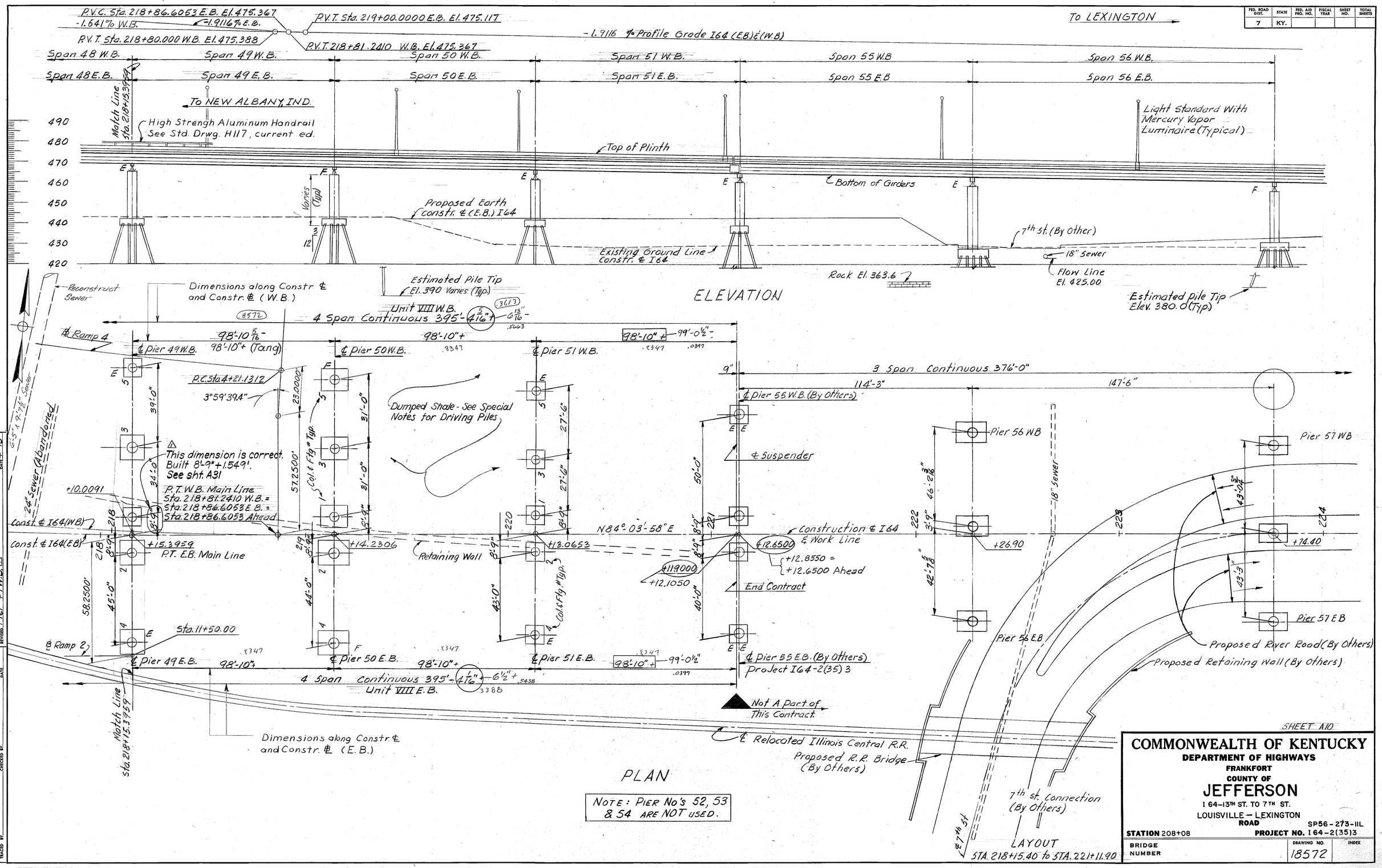

SHEET A10

COMMONWEALTH OF KENTUCKY
DEPARTMENT OF HIGHWAYS
FRANKFORT
COUNTY OF
JEFFERSON
I 64–13TH ST. TO 7TH ST.
LOUISVILLE – LEXINGTON ROAD

STATION 208+08 — PROJECT NO. I 64-2(35)3 — SP56-273-IIL

BRIDGE NUMBER — DRAWING NO. 18572 — INDEX

DESIGNED BY McFarland — CHECKED BY — DATE 6/14/73
DETAILED BY RBS — CHECKED BY — DATE 1/30/76
TRACED BY — CHECKED BY — DATE

REVISED: Length of Cont. Unit & Span 51 Sta. — DATE 2-75
REVISED: Sta. of Contract Pier 49 W.B.

GIETZGEN NO. 188-3 AGEPROOF

FED. ROAD DIST.	STATE	FED. AID PROJ. NO.	FISCAL YEAR	SHEET NO.	TOTAL SHEETS
7	KY.				

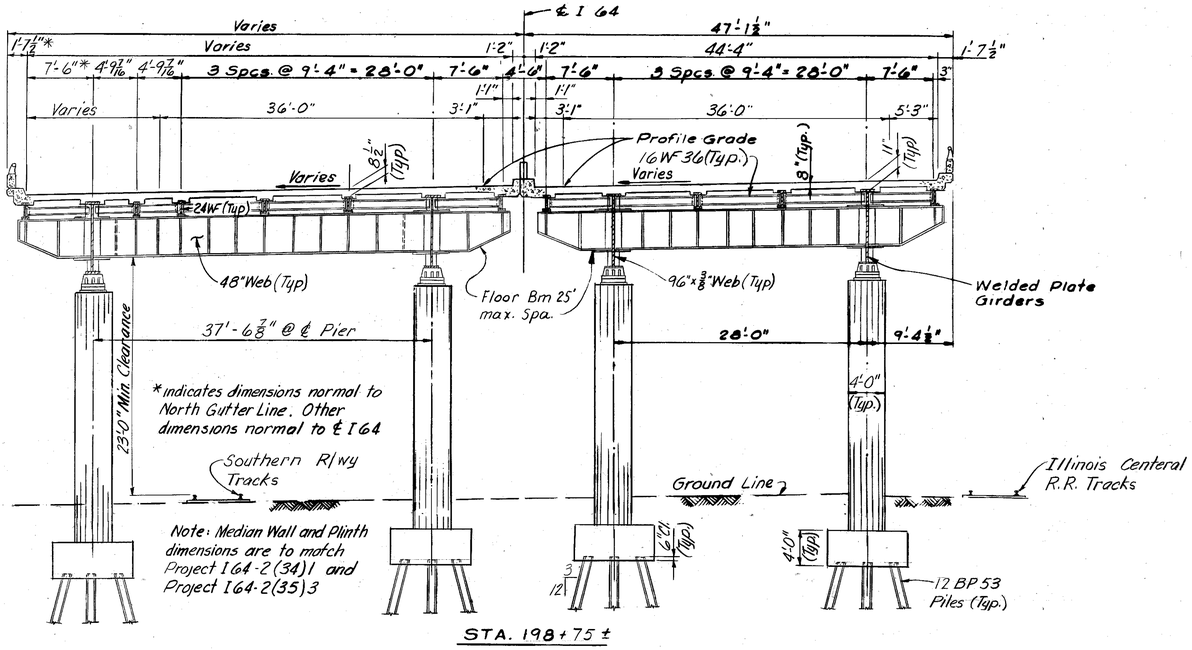

STA. 198+75 ±

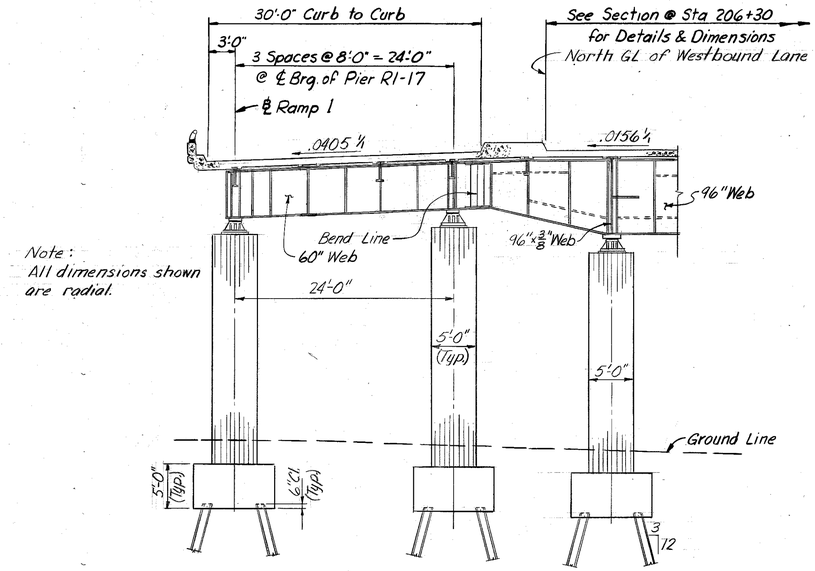

STA 204+75

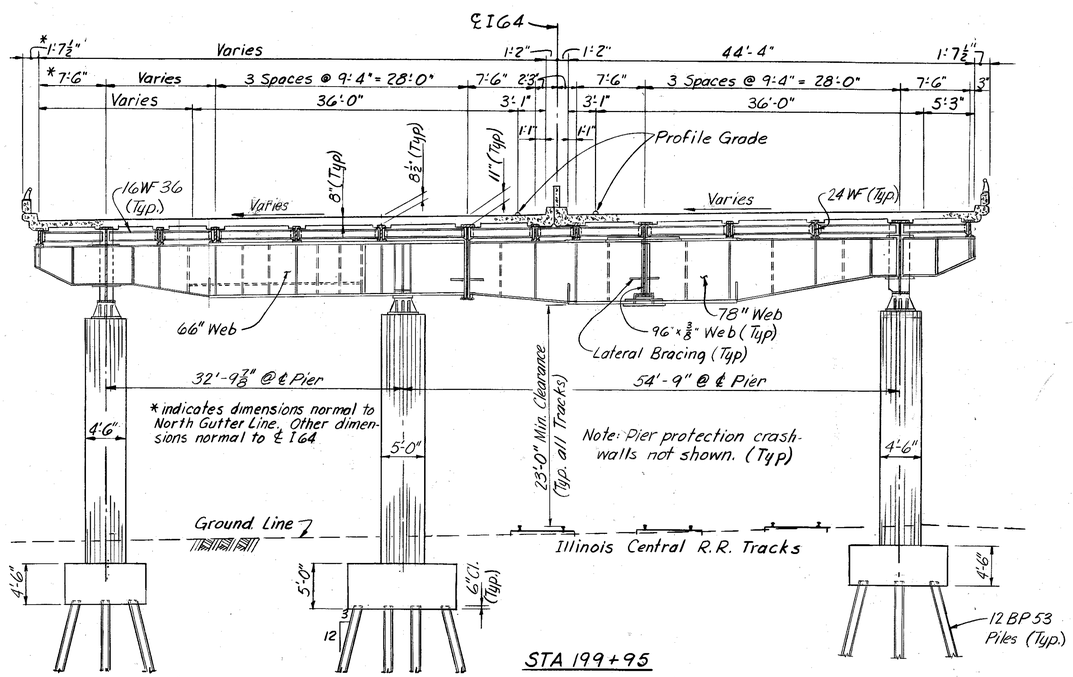

STA 199+95

DESIGNED BY ____ DATE ____ REVISED ____ DATE ____
DETAILED BY Black & Veatch CHECKED BY MK DATE 2-67 REVISED ____ DATE ____
TRACED BY ____ CHECKED BY ____ DATE ____ REVISED ____ DATE ____

SHEET A11

COMMONWEALTH OF KENTUCKY
DEPARTMENT OF HIGHWAYS
FRANKFORT
COUNTY OF
JEFFERSON
I 64 - 13TH ST. TO 7TH ST
LOUISVILLE – LEXINGTON ROAD
STATION 208+08 PROJECT NO. I 64-2(35)3 SP56-273-111

BRIDGE NUMBER	DRAWING NO 18572	INDEX

TYPICAL SECTIONS

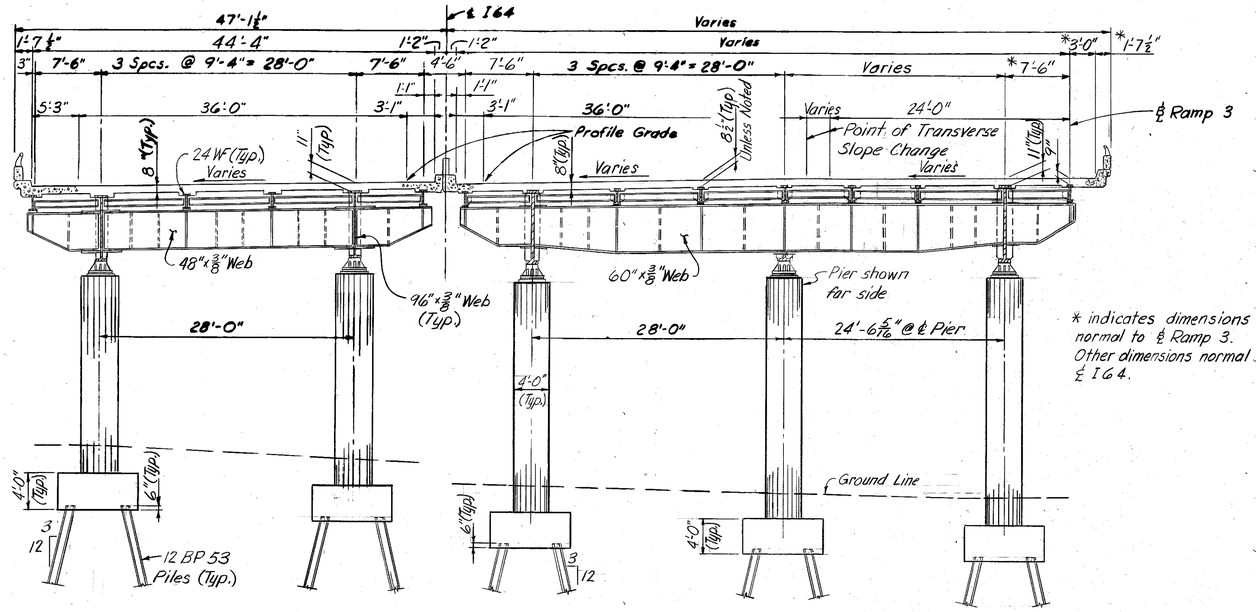

* indicates dimensions normal to ℄ Ramp 3. Other dimensions normal to ℄ I64.

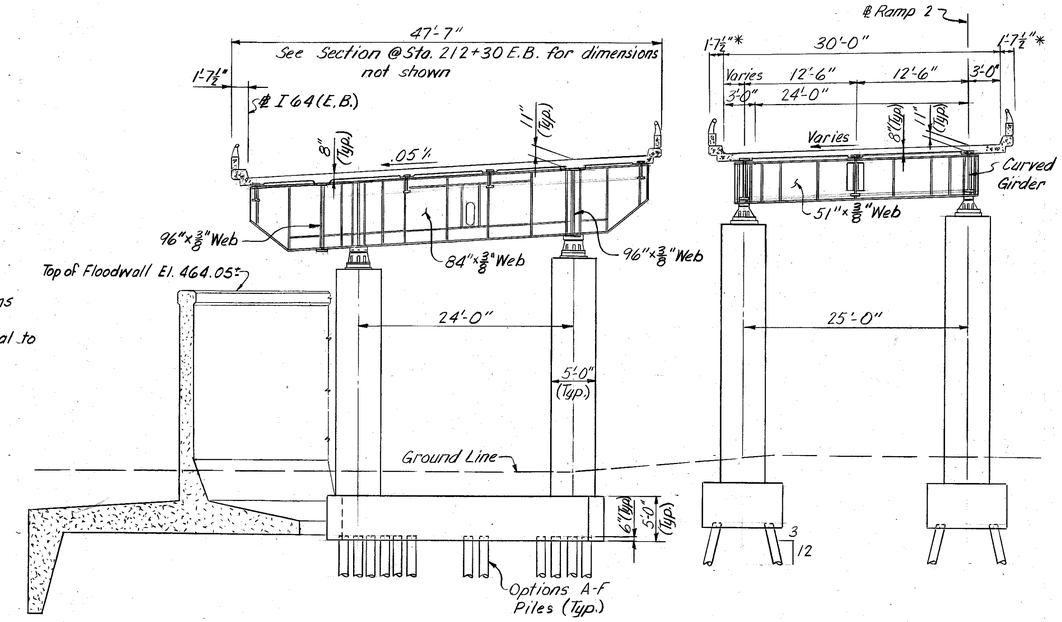

STA 214+68 E.B.

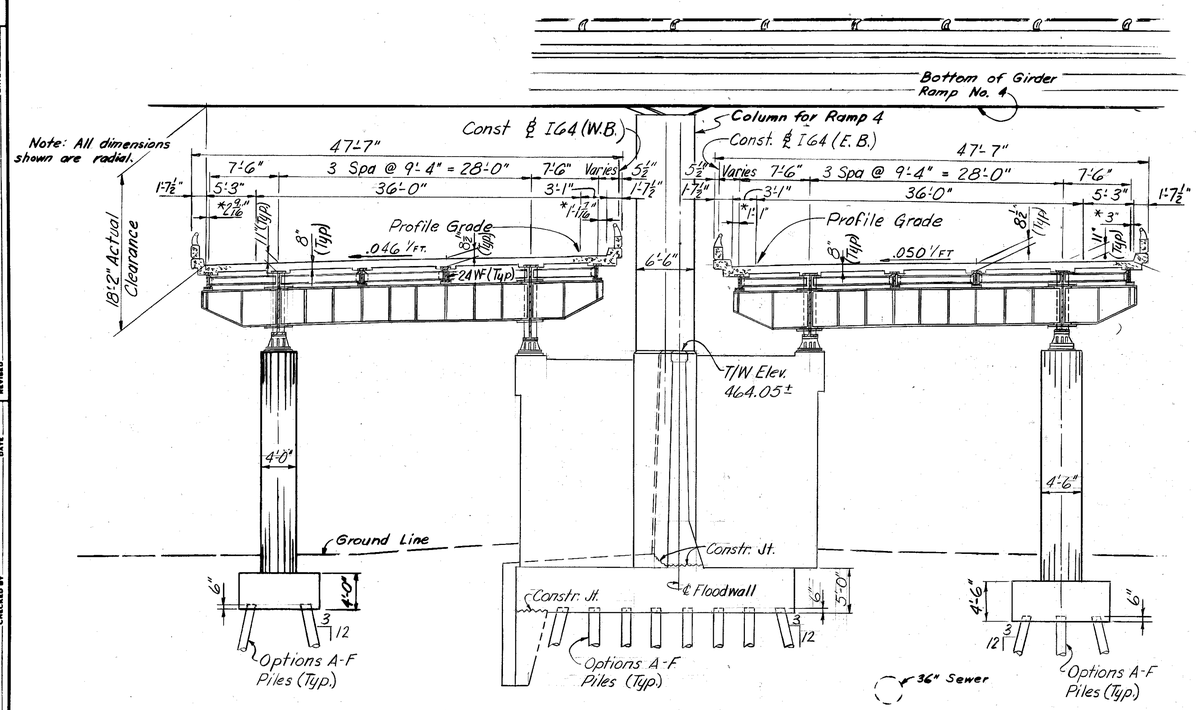

* At Suspender or ℄ Interior Piers only.

TYPICAL SECTIONS

DESIGNED BY	CHECKED BY	REVISED DATE
DETAILED BY B.L.K.	CHECKED BY MJK	REVISED DATE
TRACED BY	CHECKED BY	REVISED DATE

SHEET A12

COMMONWEALTH OF KENTUCKY
DEPARTMENT OF HIGHWAYS
FRANKFORT
COUNTY OF
JEFFERSON
I64 - 13TH ST. TO 7TH ST
LOUISVILLE – LEXINGTON ROAD

STATION 208+08 — PROJECT NO. I64-2(35)3 — SP56-273-11L

BRIDGE NUMBER — DRAWING NO 18572 — INDEX

FED. ROAD DIST.	STATE	FED. AID PRO. NO.	FISCAL YEAR	SHEET NO.	TOTAL SHEETS
7	KY.				

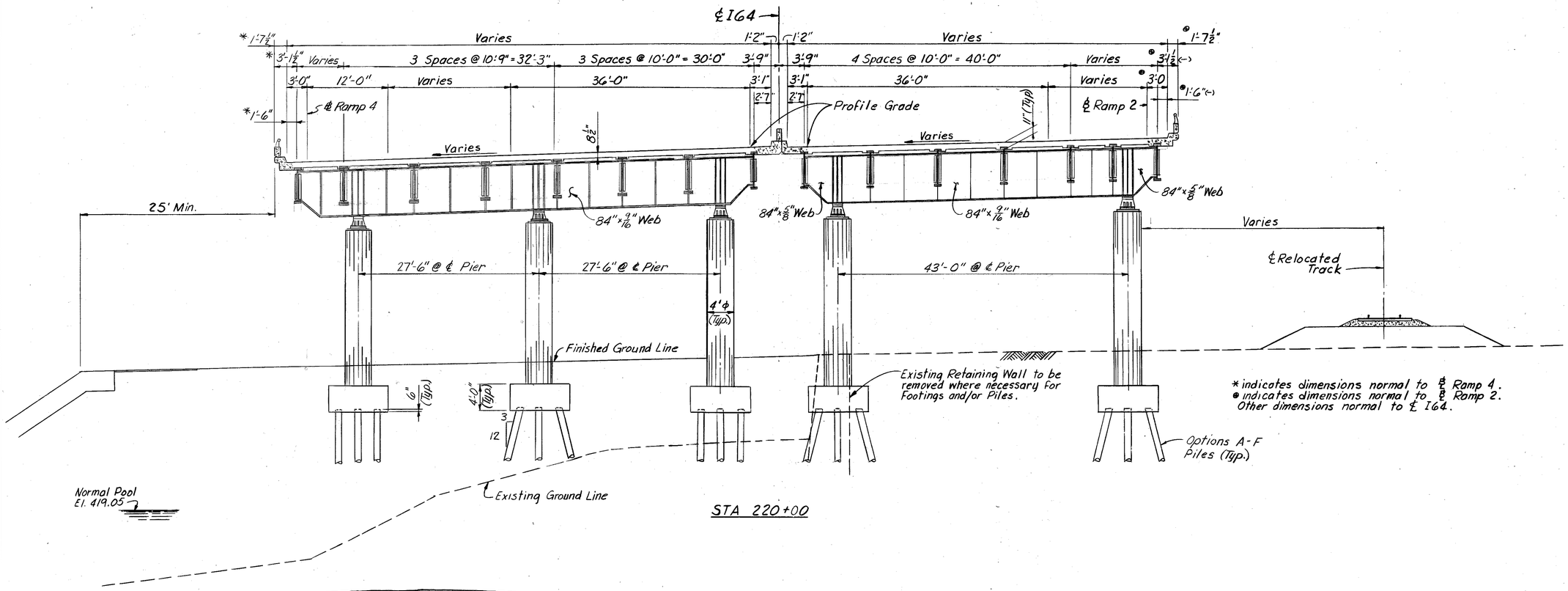

* indicates dimensions normal to ℄ Ramp 4.
⊕ indicates dimensions normal to ℄ Ramp 2.
Other dimensions normal to ℄ I64.

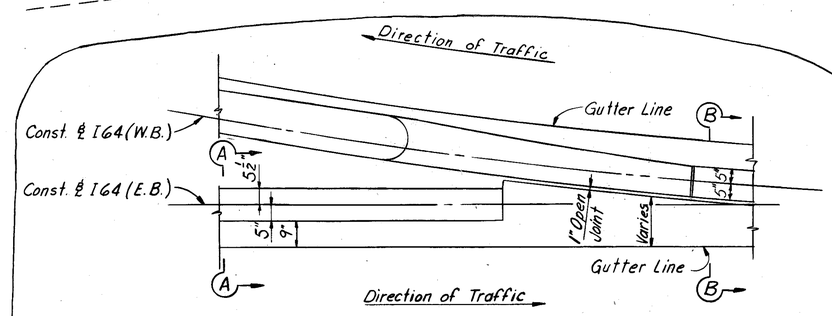

PLAN

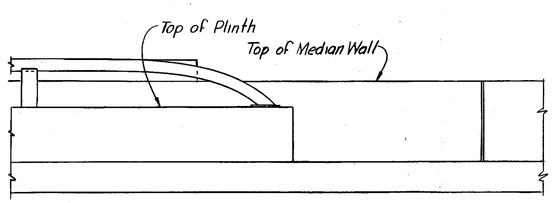

ELEVATION

PLINTH - MEDIAN WALL TRANSITION DETAIL

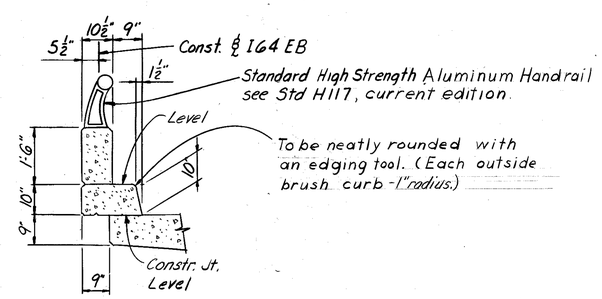

SECTION A

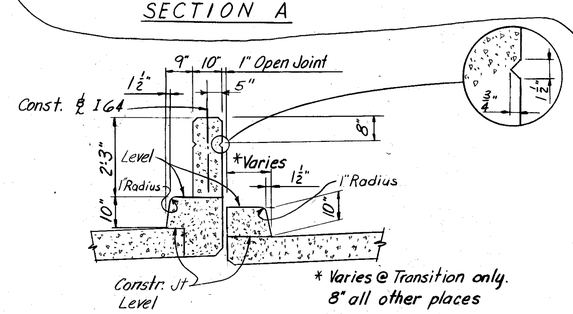

SECTION B

△ See Sht. B79 for Modifications to W.B. Median

TYPICAL SECTIONS

SHEET A13

COMMONWEALTH OF KENTUCKY
DEPARTMENT OF HIGHWAYS
FRANKFORT
COUNTY OF
JEFFERSON

I64-13TH ST. TO 7TH ST.
LOUISVILLE – LEXINGTON ROAD

SP56-273-11L

STATION 208+08 **PROJECT NO.** I 64-2(35)3

BRIDGE NUMBER	DRAWING NO.	INDEX
	18572	

DESIGNED BY Bl-L CHECKED BY JMC DATE 4-75
DETAILED BY CHECKED BY DATE
TRACED BY CHECKED BY DATE
REVISED W.B. Median △ DATE 5-69
REVISED DATE
REVISED DATE

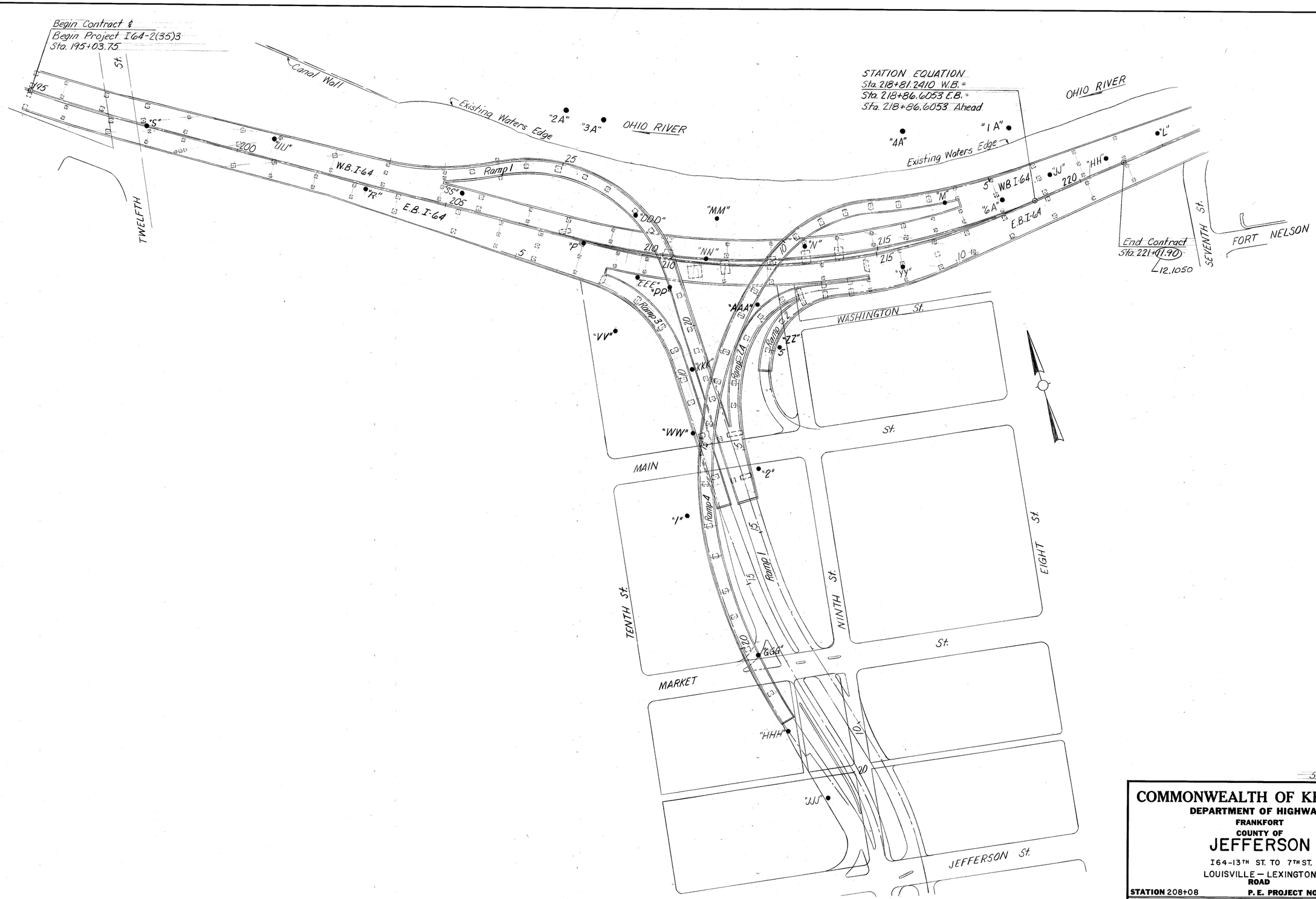

PLAN OF BORINGS

SHEET A14

COMMONWEALTH OF KENTUCKY
DEPARTMENT OF HIGHWAYS
FRANKFORT
COUNTY OF
JEFFERSON

I64-13TH ST. TO 7TH ST.
LOUISVILLE – LEXINGTON
ROAD

STATION 208+08 | **P. E. PROJECT NO.** I64-2(35)3 | SP 56-273-11L

CONSTRUCTION PROJECT NO.	MAINTENANCE PROJECT NO.	DRAWING NO.
		18572

LETTITG DATE

DESIGNED BY: CHECKED BY: DATE
DETAILED BY: CBF CHECKED BY: EGW DATE 6/4/73
TRACED BY: CHECKED BY: DATE
REVISED: Sta. End of Contract
REVISED: DATE
REVISED: DATE

FED. ROAD DIST.	STATE	FED. AID PROJ. NO.	FISCAL YEAR	SHEET NO.	TOTAL SHEETS
7	KY.				

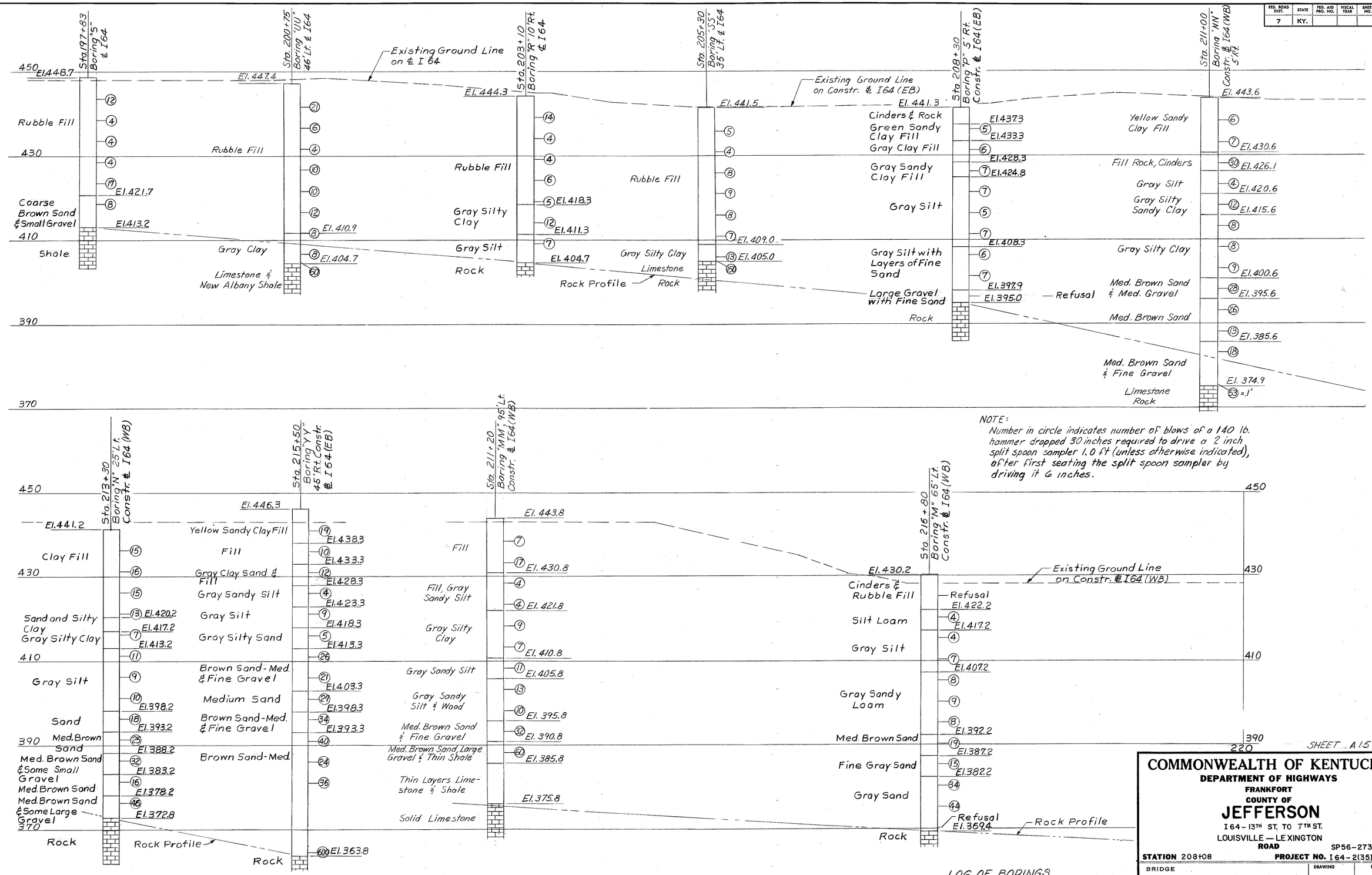

NOTE:
Number in circle indicates number of blows of a 140 lb. hammer dropped 30 inches required to drive a 2 inch split spoon sampler 1.0 ft (unless otherwise indicated), after first seating the split spoon sampler by driving it 6 inches.

LOG OF BORINGS

COMMONWEALTH OF KENTUCKY
DEPARTMENT OF HIGHWAYS
FRANKFORT
COUNTY OF
JEFFERSON

I 64 - 13TH ST. TO 7TH ST.
LOUISVILLE — LEXINGTON
ROAD SP56-273-11L

STATION 208+08 **PROJECT NO.** I 64-2(35)3

BRIDGE NUMBER | DRAWING NO. 18572 | INDEX

HAZELET & ERDAL
CONSULTING ENGINEERS
FILE NO. 845

DESIGNED BY MDC DATE
DETAILED BY LOAF CHECKED BY R. L. CONNORS DATE
TRACED BY CHECKED BY DATE
REVISED DATE
REVISED DATE
REVISED DATE

FED. ROAD DIST.	STATE	FED. AID PROJ. NO.	FISCAL YEAR	SHEET NO.	TOTAL SHEETS
7	KY.				

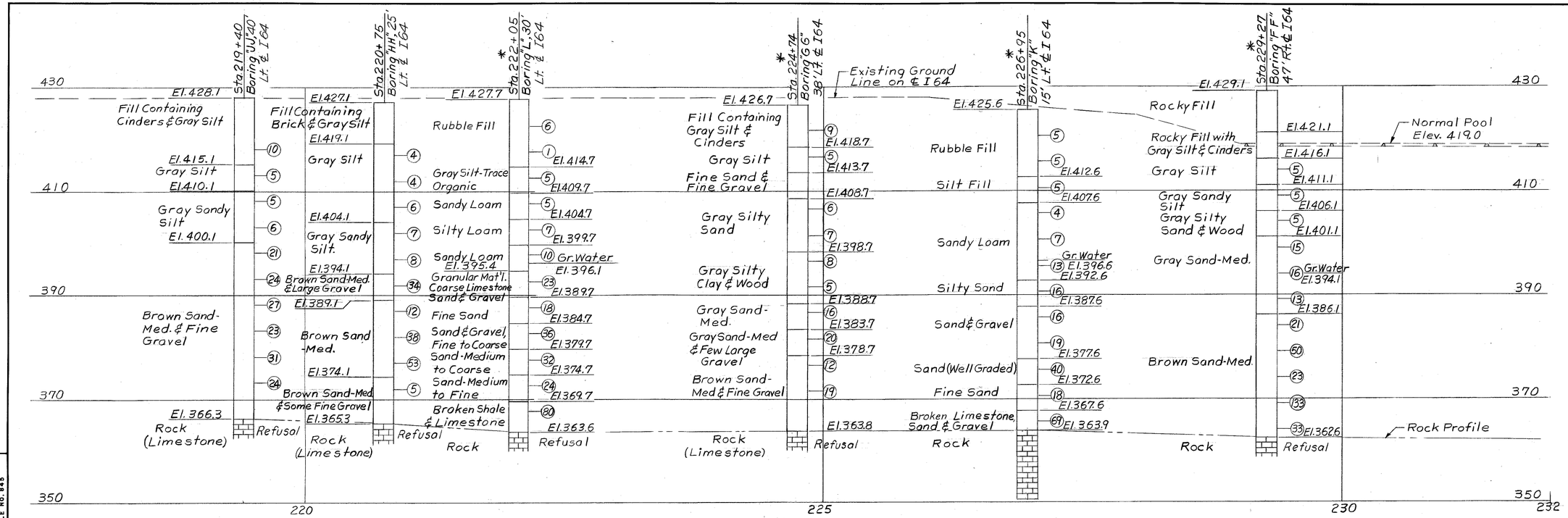

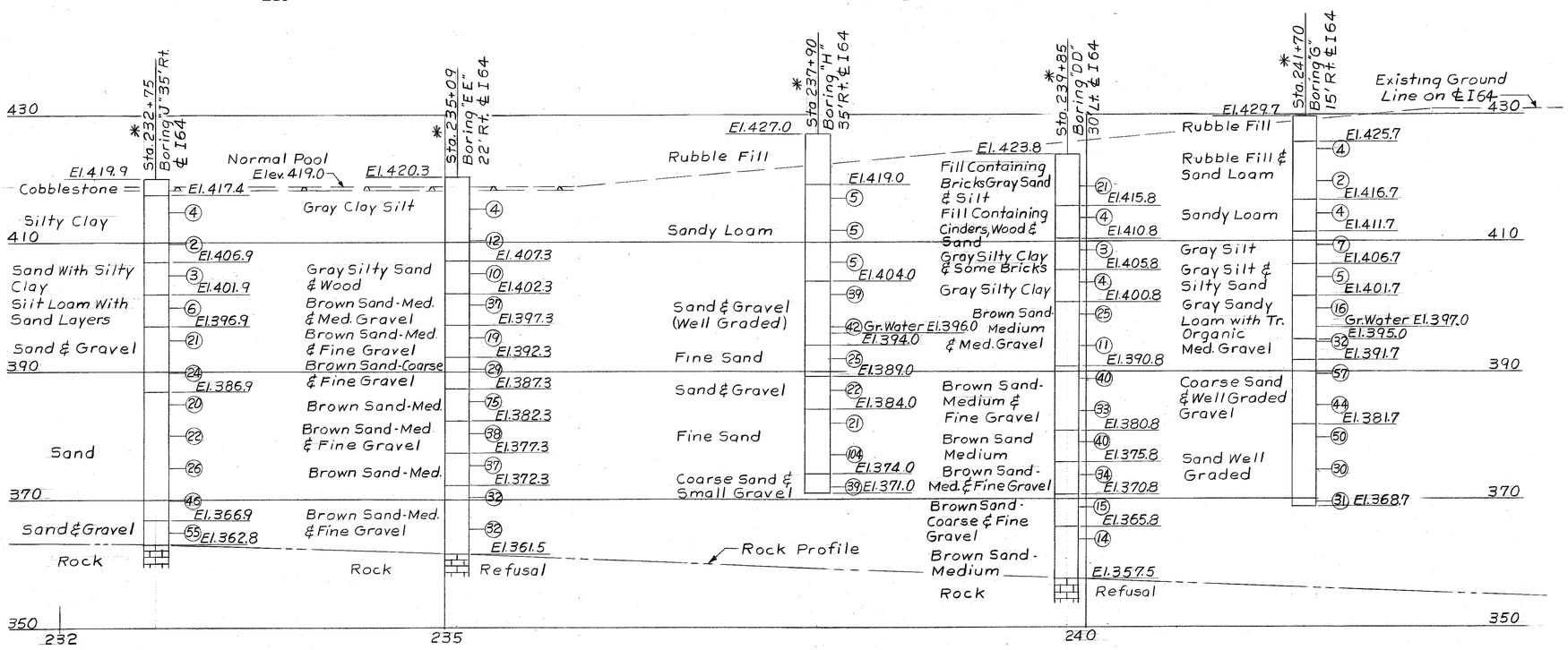

* Borings so noted are in contract for I64 - 7th St. to 2nd St.

LOG OF BORINGS

SHEET A16

COMMONWEALTH OF KENTUCKY
DEPARTMENT OF HIGHWAYS
FRANKFORT

COUNTY OF

JEFFERSON

I 64 – 13TH ST. TO 7TH ST.

LOUISVILLE — LEXINGTON

ROAD SP56-273-11L

STATION 208+08 PROJECT NO. I 64-2(35)3

BRIDGE NUMBER

DRAWING NO. 18572

INDEX

HAZELET & ERDAL CONSULTING ENGINEERS FILE NO. 845

DESIGNED BY MDC. DATE
DETAILED BY MDC. CHECKED BY OAF DATE
TRACED BY RL CHKD BY DATE
REVISED DATE
REVISED DATE
REVISED DATE

FED. ROAD DIST.	STATE	FED. AID PROJ. NO.	FISCAL YEAR	SHEET NO.	TOTAL SHEETS
7	KY.				

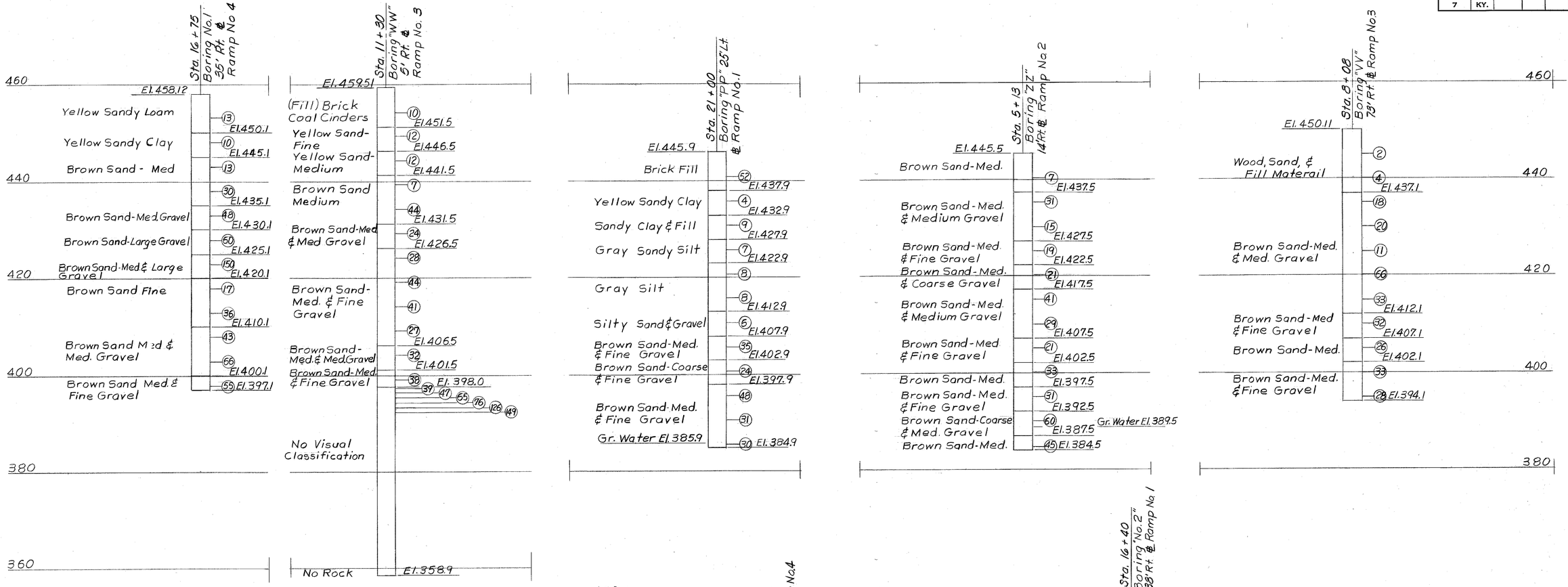

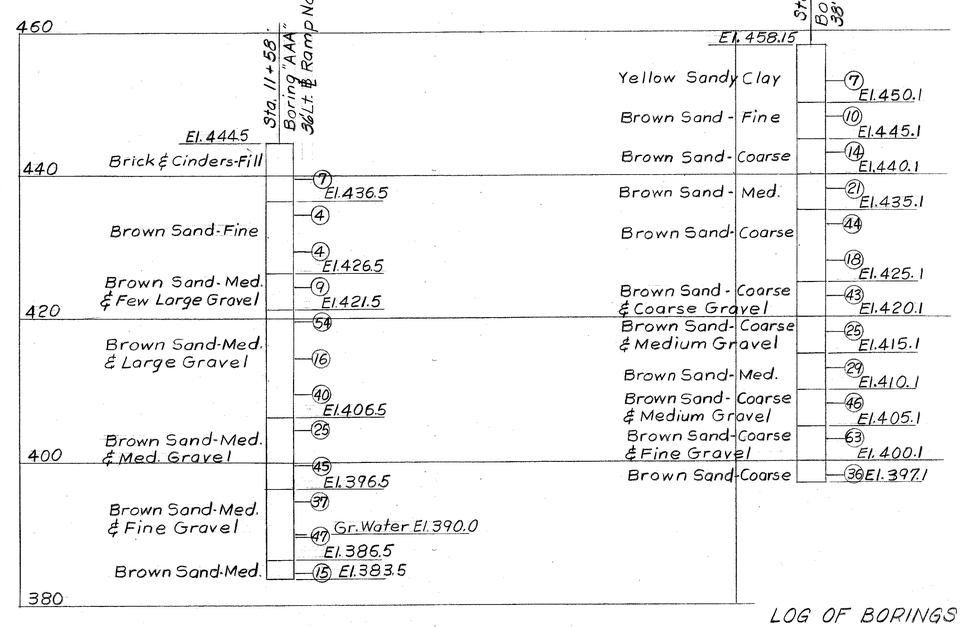

LOG OF BORINGS

NOTE

Borings shown on this sheet were located by an original alignment that has been extensivly revised, stations and offsets shown are for present alignment.

SHEET A:7

HAZELET & ERDAL CONSULTING ENGINEERS FILE NO. 645

DESIGNED BY ____ DATE ____ REVISED ____ DATE ____
DETAILED BY M.D.C. & O.A.F. CHECKED BY R. L. Kimmerling DATE ____ REVISED ____ DATE ____
TRACED BY ____ CHECKED BY ____ DATE ____ REVISED ____ DATE ____

COMMONWEALTH OF KENTUCKY

DEPARTMENT OF HIGHWAYS

FRANKFORT

COUNTY OF

JEFFERSON

I64-13TH ST. TO 7TH ST.

LOUISVILLE – LEXINGTON **ROAD**

STATION 208+08 **PROJECT NO.** I64-2(35)3 SP56-273-11L

BRIDGE NUMBER	DRAWING NO. 18572	INDEX

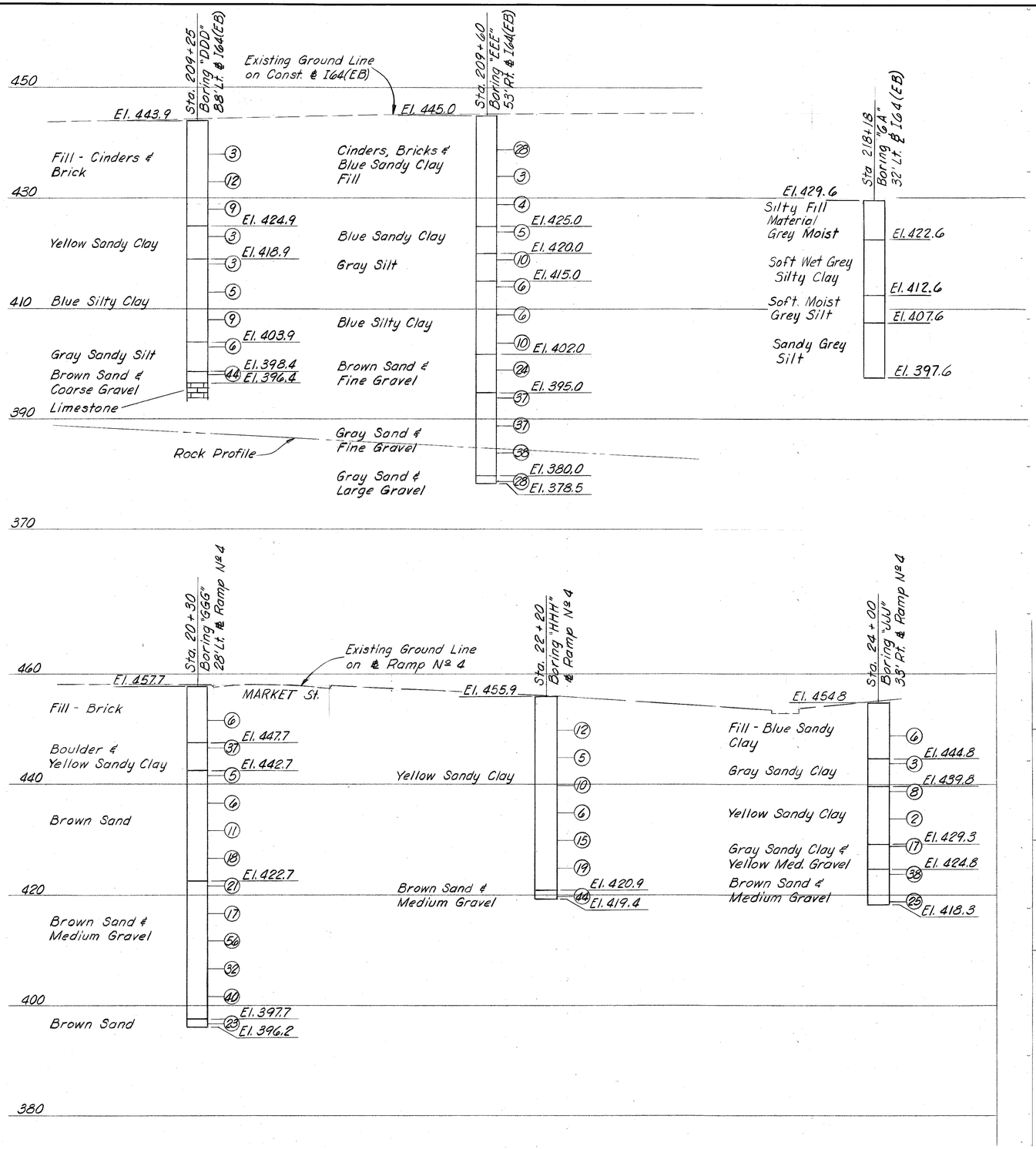

LOG OF BORINGS

SHEET A18

COMMONWEALTH OF KENTUCKY
DEPARTMENT OF HIGHWAYS
FRANKFORT
COUNTY OF
JEFFERSON

I64-13TH ST. TO 7TH ST.
LOUISVILLE — LEXINGTON ROAD

SP 56-273-11L

STATION 208+08 **P.E. PROJECT NO.** I64-2(35)3

CONSTRUCTION PROJECT NO.	MAINTENANCE PROJECT NO.	DRAWING NO.
		18572

LETTITG DATE

DESIGNED BY ELW DATE
DETAILED BY DATE
TRACED BY DATE
CHECKED BY CRF DATE 4-15-71
CHECKED BY DATE
CHECKED BY DATE
REVISED
REVISED
REVISED

FED. ROAD DIST.	STATE	FED. AID PROJ. NO.	FISCAL YEAR	SHEET NO.	TOTAL SHEETS
7	KY.				

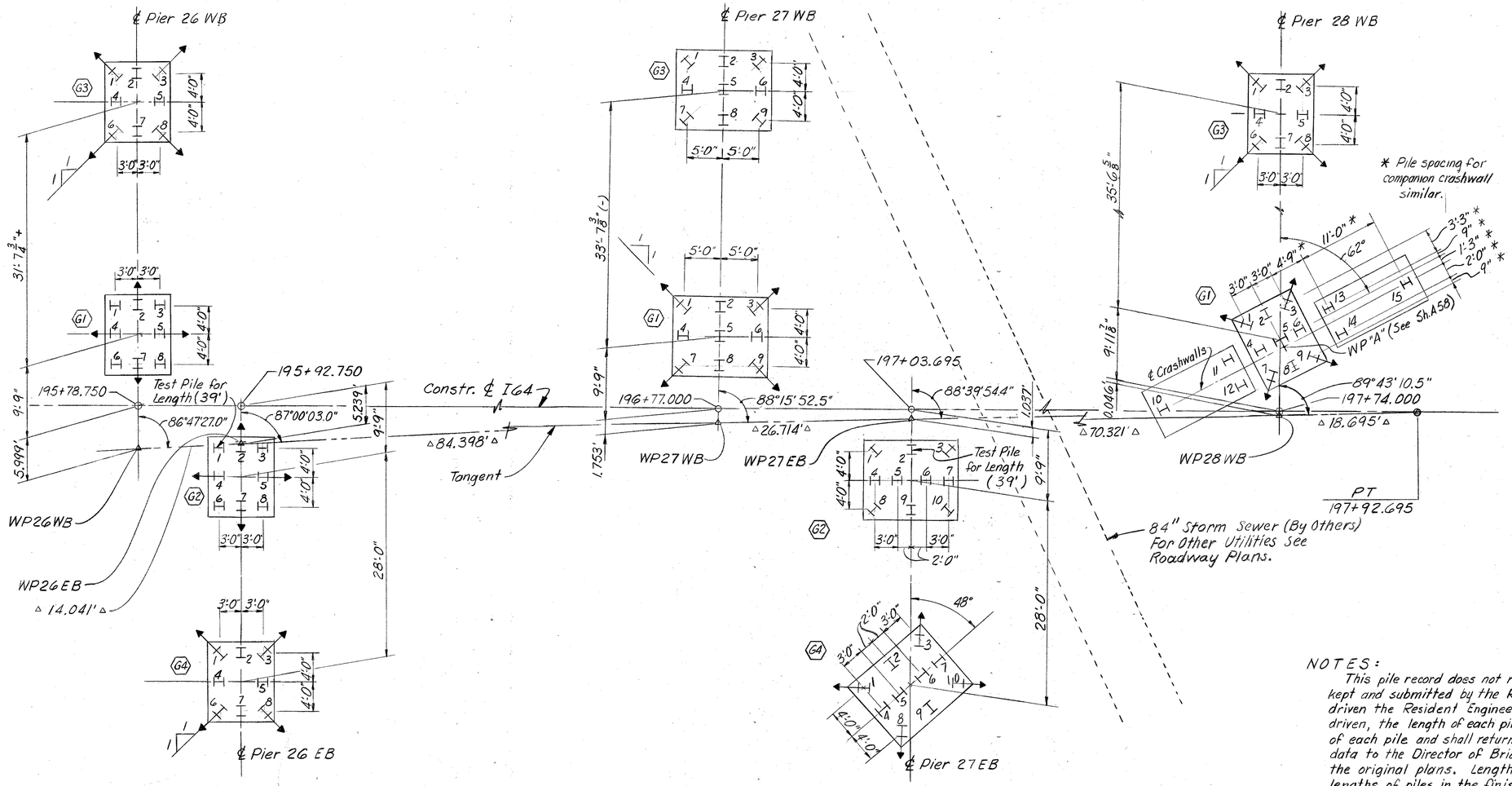

	Pile No.	Cutoff Elev.	Tip of Pile El. as Driven	Length of Pile in Place	Calc. Brg. Capacity Tons
Pier 27EB G4	7	442.100			
	8	↓			
	9				
	10	▼			
Pier 28WB G3	1	441.789			
	2	↓			
	3				
	4				
	5				
	6				
	7				
	8	▼			
Pier 28WB G1	1	441.677			
	2	↓			
	3				
	4				
	5				
	6				
	7				
	8				
	9	▼			
	10	445.427			
	11	↓			
	12				
	13				
	14				
	15	▼			

NOTES:

This pile record does not replace other records of piles required to be kept and submitted by the Resident Engineer. After all piles have been driven the Resident Engineer shall record the tip-of-pile elevation as driven, the length of each pile in place, the calculated bearing capacity of each pile and shall return one blue print copy of this sheet with this data to the Director of Bridges so that the data may be recorded on the original plans. Length of piles in place shown hereon are the actual lengths of piles in the finished structure below cutoff elevation and are not necessarily pay items.

Ⓐ See Special Notes for "Driving Piles under Floodwall Monoliths and Adjacent Footings."

All batter piles shown shall be driven on a batter of 3:12 from vertical.

The length of Test Pile for Length is estimated.

Piles for Crashwalls are symmetrical about ℄ Footing except as shown.

Footing Designation { G3 indicates center of column and footing is under long. Girder 3. / 3 indicates center of column and footing is near long. Girder 3.

⊢ indicates Piles, 12 BP 53

○ indicates Piles, Options A thru F

⊢→ indicates batter in ⊖→ direction shown.

1/1 indicates horizontal direction of batter pile. Direction is typical for all piles as indicated.

	Pile No.	Cut off Elev.	Tip of Pile El. as Driven	Length of Pile in place	Calc. Brg. capacity Tons
Pier 26 WB G3	1	441.934			
	2	↓			
	3				
	4				
	5				
	6				
	7				
	8	▼			
Pier 26 WB G1	1	442.224			
	2	↓			
	3				
	4				
	5				
	6				
	7	▼			

	Pile No.	Cut off Elev.	Tip of Pile El. as Driven	Length of Pile in place	Calc. Brg. capacity Tons
G1	8	442.224			
Pier 26 EB G2	1	442.064			
	2	↓			
	3				
	4				
	5				
	6				
	7				
	8	▼			
Pier 26 EB G4	1	442.023			
	2	↓			
	3				
	4				
	5				
	6	▼			

	Pile No.	Cut off Elev.	Tip of Pile El. as Driven	Length of Pile in place	Calc. Brg. capacity Tons
G4	7	442.023			
	8	442.023			
Pier 27 WB G3	1	441.832			
	2	↓			
	3				
	4				
	5				
	6				
	7				
	8				
	9	▼			
G1	1	442.172			
	2	↓			
	3				
	4	▼			

	Pile No.	Cut off Elev.	Tip of Pile El. as Driven	Length of Pile in place	Calc. Brg. capacity Tons
Pier 27WB G1	5	442.172			
	6	↓			
	7				
	8				
	9	▼			
Pier 27EB G2	1	442.140			
	2	↓			
	3				
	4				
	5				
	6				
	7				
	8				
	9				
	10	▼			

	Pile No.	Cutoff Elev	Tip of Pile El. as Driven	Length of Pile in Place	Calc. Brg Capacity Tons
Pier 27EB G4	1	442.100			
	2	↓			
	3				
	4				
	5				
	6	▼			

PILE RECORD

SHEET A19

COMMONWEALTH OF KENTUCKY
DEPARTMENT OF HIGHWAYS
FRANKFORT

COUNTY OF
JEFFERSON

I64-13TH ST. TO 7TH ST.
LOUISVILLE—LEXINGTON ROAD

S P 56-273-11L

STATION 208+08 PROJECT NO. I64-2(35)3

BRIDGE NUMBER | DRAWING NO. 18572 | INDEX

DESIGNED BY: | DATE | REVISED | DATE
DETAILED BY: Black | CHECKED BY: RHC | DATE May 71 | REVISED | DATE
TRACED BY: | CHECKED BY: | DATE | REVISED | DATE

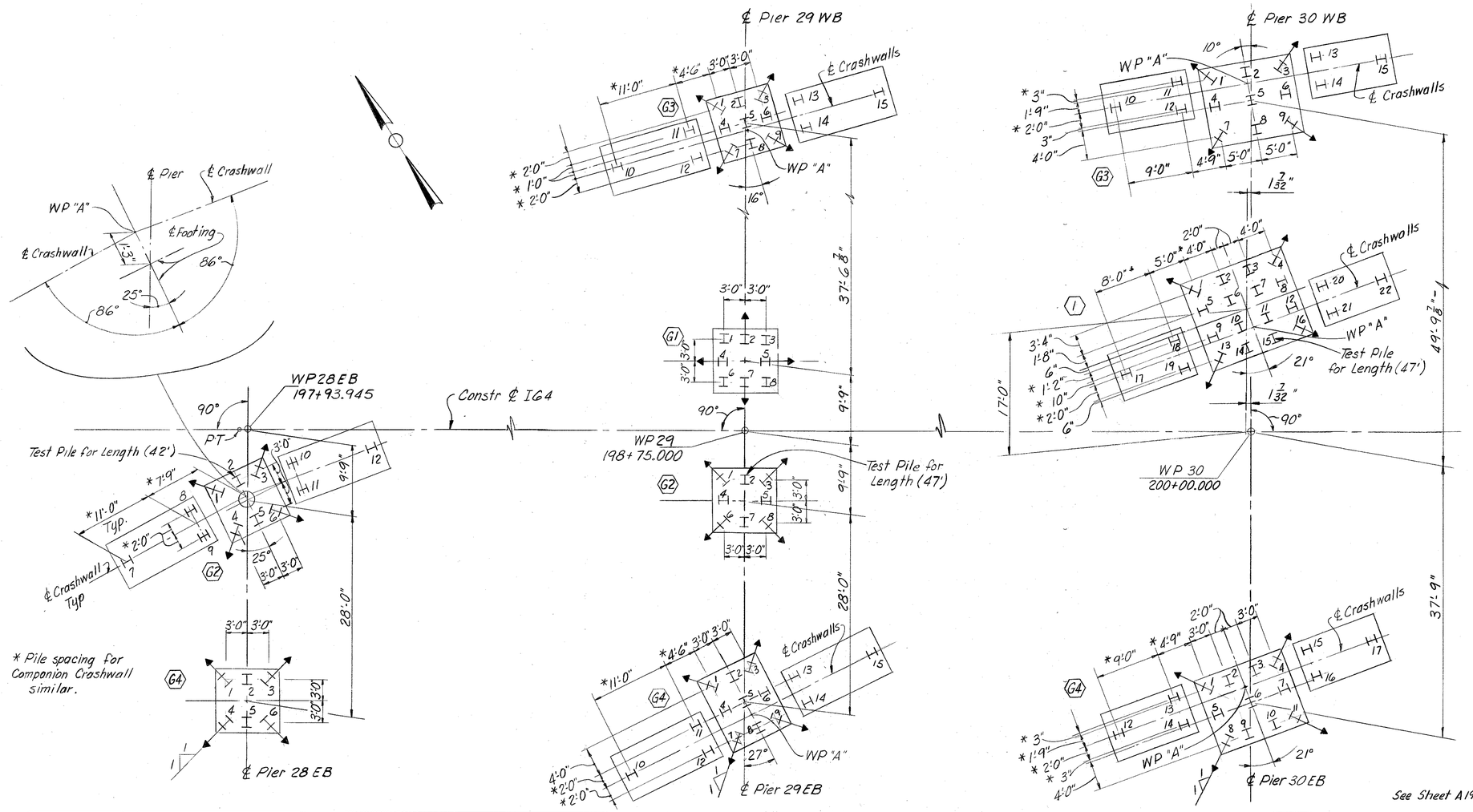

	Pile No.	Cut off Elev.	Tip of Pile El. as Driven	Length of Pile in place	Calc. Brg. capacity Tons
Pier 28 EB (G2)	1	442.342			
	2	↓			
	3				
	4				
	5				
	6	↓			
	7	446.092			
	8				
	9				
	10				
	11				
	12	↓			
(G4)	1	443.036			
	2				
	3	↓			

	Pile No.	Cut off Elev.	Tip of Pile El. as Driven	Length of Pile in place	Calc. Brg. capacity Tons
Pier 28 EB (G4)	4	443.036			
	5				
	6	↓			
Pier 29 WB (G3)	1	442.002			
	2				
	3				
	4				
	5				
	6				
	7				
	8				
	9	↓			
	10	445.252			
	11				
	12	↓			

	Pile No.	Cut off Elev.	Tip of Pile El. as Driven	Length of Pile in place	Calc. Brg. capacity Tons
Pier 29 WB (G3)	13	445.252			
	14				
	15	↓			
Pier 29 WB (G1)	1	443.369			
	2				
	3				
	4				
	5				
	6				
	7				
	8	↓			
(G2)	1	443.798			
	2				
	3				
	4	↓			

	Pile No.	Cut off Elev.	Tip of Pile El. as Driven	Length of Pile in place	Calc. Brg. capacity Tons
Pier 29 EB (G2)	5	443.798			
	6				
	7				
	8	↓			
Pier 29 EB (G4)	1	443.781			
	2				
	3				
	4				
	5				
	6				
	7				
	8				
	9	↓			
	10	447.031			
	11	447.031			

	Pile No.	Cutoff Elev.	Tip of Pile El. as Driven	Length of Pile in place	Calc. Brg capacity Tons
Pier 29 EB (G4)	12	447.031			
	13				
	14				
	15	↓			
Pier 30 WB (G3)	1	440.560			
	2				
	3				
	4				
	5				
	6				
	7				
	8				
	9	↓			
	10	444.310			
	11	444.310			

	Pile No.	Cutoff Elev	Tip of Pile El as Driven	Length of Pile in place	Calc. Brg capacity Tons
Pier 30 WB (G3)	12	444.310			
	13				
	14				
	15	↓			
Pier 30 WB (1)	1	440.696			
	2				
	3				
	4				
	5				
	6				
	7				
	8				
	9				
	10				
	11				
	12				
	13				
	14				
	15				
	16	↓			
	17	444.946			
	18				
	19				
	20				
	21				
	22	↓			
Pier 30 EB (G4)	1	443.097			
	2				
	3				
	4				
	5				
	6				
	7				
	8				
	9				
	10				
	11	↓			
	12	446.847			
	13				
	14				
	15				
	16				
	17	↓			

PILE RECORD

SHEET A20

COMMONWEALTH OF KENTUCKY
DEPARTMENT OF HIGHWAYS
FRANKFORT
COUNTY OF
JEFFERSON

I64-13TH ST. TO 7TH ST.
LOUISVILLE—LEXINGTON ROAD

SP 56-273-11L

STATION 208+08 **P. E. PROJECT NO.** I 64-2 (35) 3

CONSTRUCTION PROJECT NO.	MAINTENANCE PROJECT NO.	DRAWING NO.
		18572

LETTING DATE

DESIGNED BY Block DATE
DETAILED BY DATE
TRACED BY DATE
CHECKED BY AHC DATE May 11
CHECKED BY DATE
CHECKED BY DATE
REVISED
REVISED
REVISED

LETTING DATE

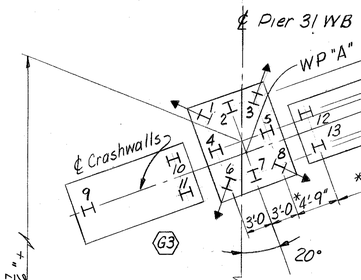

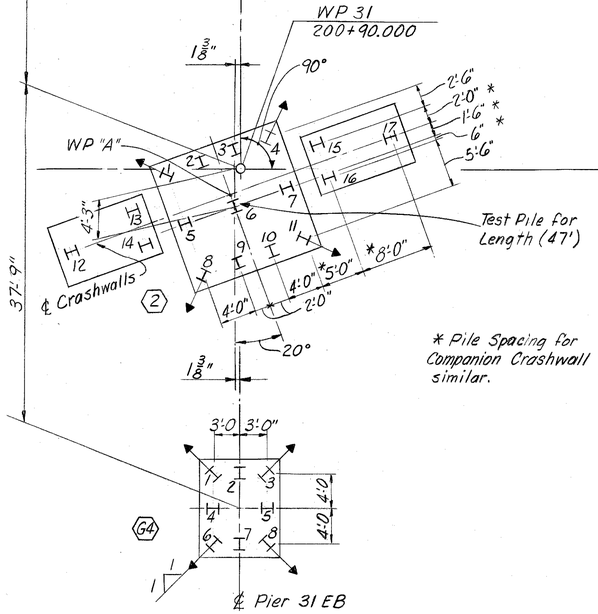

* Pile Spacing for Companion Crashwall similar.

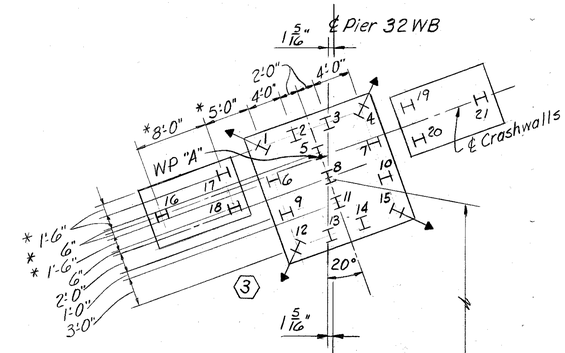

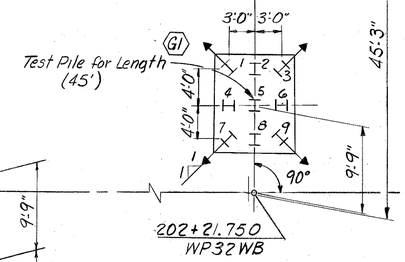

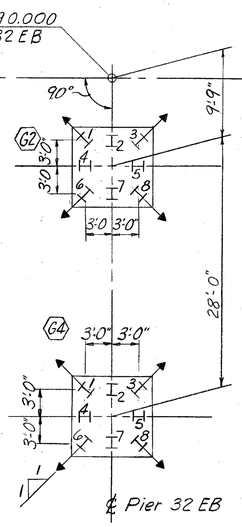

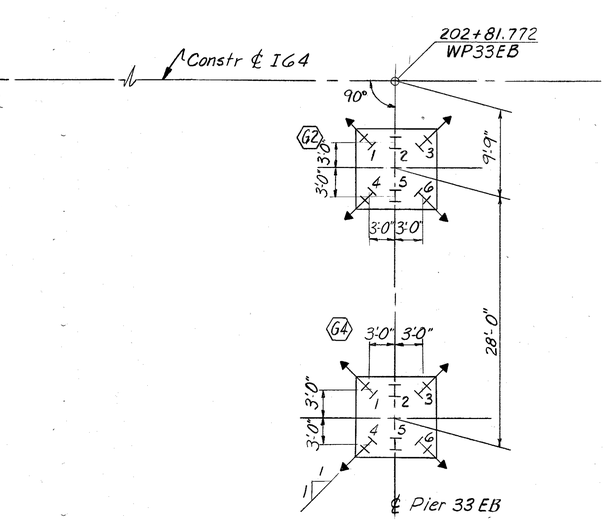

	Pile No.	Cut off Elev.	Tip of Pile El. as Driven	Length of Pile in place	Calc. Brg. capacity Tons
Pier 31 WB (3)	1	440.735			
	2				
	3				
	4				
	5				
	6				
	7				
	8	▼			
	9	444.485			
	10				
	11				
	12				
	13				
	14	▼			
(2)	1	440.933			

	Pile No.	Cut off Elev.	Tip of Pile El. as Driven	Length of Pile in place	Calc. Brg. capacity Tons
Pier 31 EB (2)	2	440.933			
	3				
	4				
	5				
	6				
	7				
	8				
	9				
	10				
	11	▼			
	12	445.183			
	13				
	14				
	15				
	16	▼			

	Pile No.	Cut off Elev.	Tip of Pile El. as Driven	Length of Pile in place	Calc. Brg. capacity Tons
(2)	17	445.183			
Pier 31 EB (G4)	1	441.086			
	2				
	3				
	4				
	5				
	6				
	7				
	8	▼			
Pier 32 EB (G2)	1	441.166			
	2				
	3				
	4				
	5				
	6	▼			

	Pile No.	Cut off Elev.	Tip of Pile El. as Driven	Length of Pile in place	Calc. Brg. capacity Tons
(G2)	7	441.166			
	8	441.166			
Pier 32 EB (G4)	1	440.643			
	2				
	3				
	4				
	5				
	6				
	7				
	8	▼			
Pier 32 WB (3)	1	439.345			
	2				
	3				
	4				
	5	▼			

	Pile No.	Cut off Elev.	Tip of Pile El. as Driven	Length of Pile in Place	Calc. Brg capacity Tons.
Pier 32 WB (3)	6	439.345			
	7				
	8				
	9				
	10				
	11				
	12				
	13				
	14				
	15	▼			
	16	443.595			
	17				
	18				
	19				
	20				
	21	▼			
Pier 32 WB (G1)	1	439.668			
	2				
	3				
	4				
	5				
	6				
	7				
	8				
	9	▼			
Pier 33 EB (G2)	1	438.919			
	2				
	3				
	4				
	5				
	6	▼			
Pier 33 EB (G4)	1	438.116			
	2				
	3				
	4				
	5				
	6	▼			

See Sheet 19A for Notes.

PILE RECORD

SHEET A21

COMMONWEALTH OF KENTUCKY
DEPARTMENT OF HIGHWAYS
FRANKFORT
COUNTY OF
JEFFERSON
I64-13TH ST. TO 7TH ST.
LOUISVILLE— LEXINGTON ROAD
SP 56-273-11L
STATION 208+08
P. E. PROJECT NO. I 64-2 (35) 3

CONSTRUCTION PROJECT NO.	MAINTENANCE PROJECT NO.	DRAWING NO.
		18572

DESIGNED BY Block CHECKED BY MAH DATE May 71 REVISED
DETAILED BY CHECKED BY DATE REVISED
TRACED BY CHECKED BY DATE REVISED

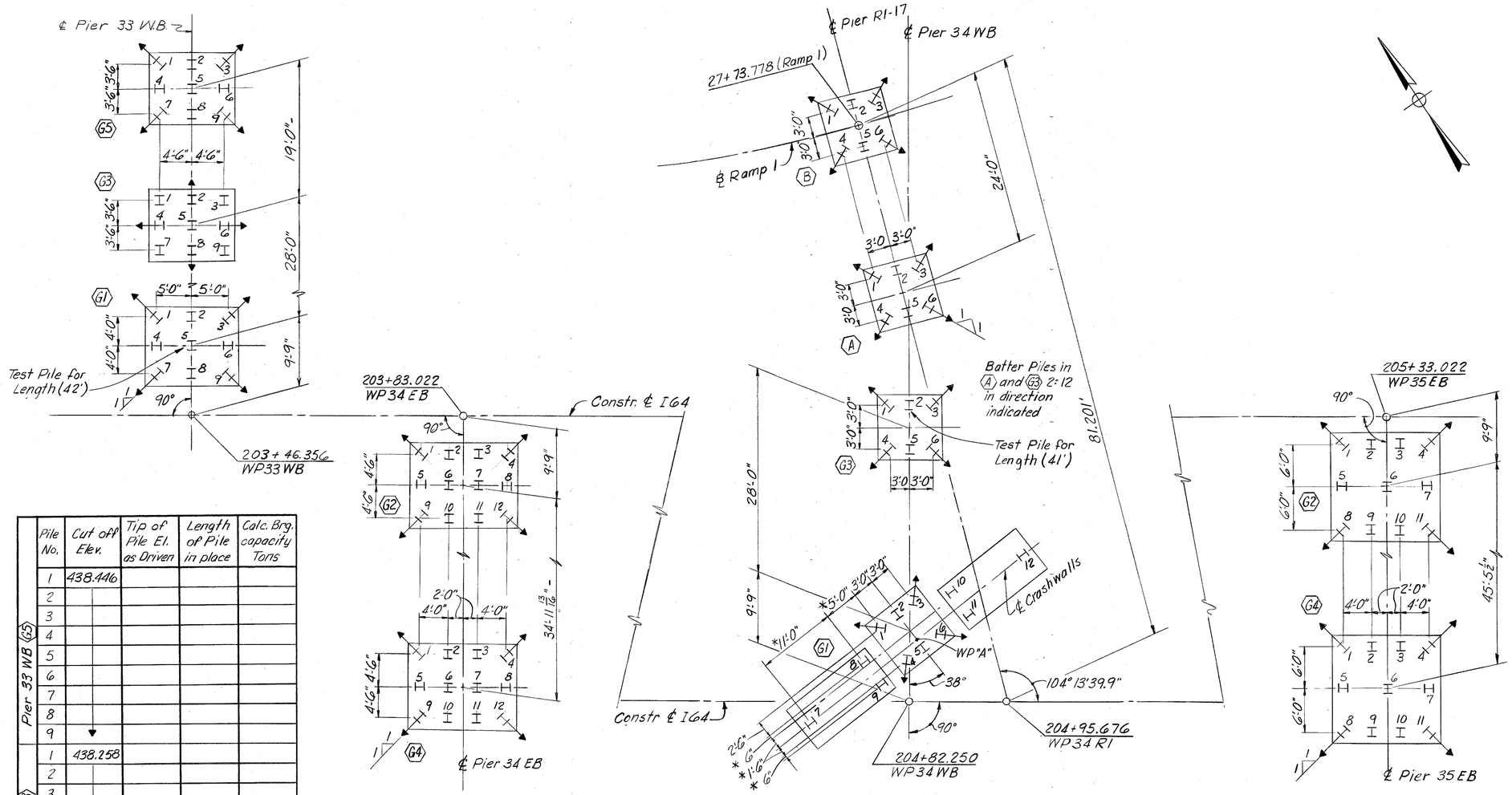

	Pile No.	Cut off Elev.	Tip of Pile El. as Driven	Length of Pile in place	Calc. Brg. capacity Tons
Pier 33 WB (G5)	1	438.446			
	2				
	3				
	4				
	5				
	6				
	7				
	8				
	9	↓			
Pier 33 WB (G3)	1	438.258			
	2				
	3				
	4				
	5				
	6				
	7				
	8				
	9	↓			
Pier 33 WB (G1)	1	437.466			
	2				
	3				
	4				
	5				
	6				
	7				
	8				
	9	↓			
(G2)	1	436.303			
	2				
	3	↓			

	Pile No.	Cut off Elev.	Tip of Pile El. as Driven	Length of Pile in place	Calc. Brg. capacity Tons
Pier 34 EB (G2)	4	436.303			
	5				
	6				
	7				
	8				
	9				
	10				
	11				
	12	↓			
(G4)	1	436.072			
	2				
	3				
	4				
	5				
	6	↓			

	Pile No.	Cut off Elev.	Tip of Pile El. as Driven	Length of Pile in place	Calc. Brg. capacity Tons
Pier 34 EB (G4)	7	436.072			
	8				
	9				
	10				
	11				
	12	↓			
Pier R1-17 (B)	1	437.000			
	2				
	3				
	4				
	5				
	6	↓			
(A)	1	436.534			
	2				
	3	↓			

	Pile No.	Cut off Elev.	Tip of Pile El. as Driven	Length of Pile in place	Calc. Brg. capacity Tons
Pier R1-17 (A)	4	436.534			
	5				
	6	↓			
Pier 34 WB (G3)	1	436.288			
	2				
	3				
	4				
	5				
	6	↓			
Pier 34 WB (G1)	1	435.473			
	2				
	3				
	4				
	5				
	6	↓			

* Pile spacing for Companion Crashwall similar.

See Sheet A19 for Notes.

	Pile No	Cutoff Elev.	Tip of Pile El. as Driven	Length of Pile in Place	Calc. Brg capacity Tons
Pier 34 WB (G1)	7	439.723			
	8				
	9				
	10				
	11				
	12	↓			
Pier 35 EB (G2)	1	435.261			
	2				
	3				
	4				
	5				
	6				
	7				
	8				
	9				
	10				
	11	↓			
Pier 35 EB (G4)	1	434.699			
	2				
	3				
	4				
	5				
	6				
	7				
	8				
	9				
	10				
	11	↓			

SHEET A22

COMMONWEALTH OF KENTUCKY
DEPARTMENT OF HIGHWAYS
FRANKFORT
COUNTY OF
JEFFERSON

I64-13TH ST. TO 7TH ST.
LOUISVILLE—LEXINGTON ROAD

STATION 208+08 | P.E. PROJECT NO. I 64-2 (35) 3 | SP 56-273-11L

CONSTRUCTION PROJECT NO. | MAINTENANCE PROJECT NO. | DRAWING NO. 18572

PILE RECORD

LETTING DATE

DESIGNED BY Black | CHECKED BY | DATE | REVISED
DETAILED BY | CHECKED BY RHC | DATE May 71 | REVISED
TRACED BY | CHECKED BY | DATE | REVISED

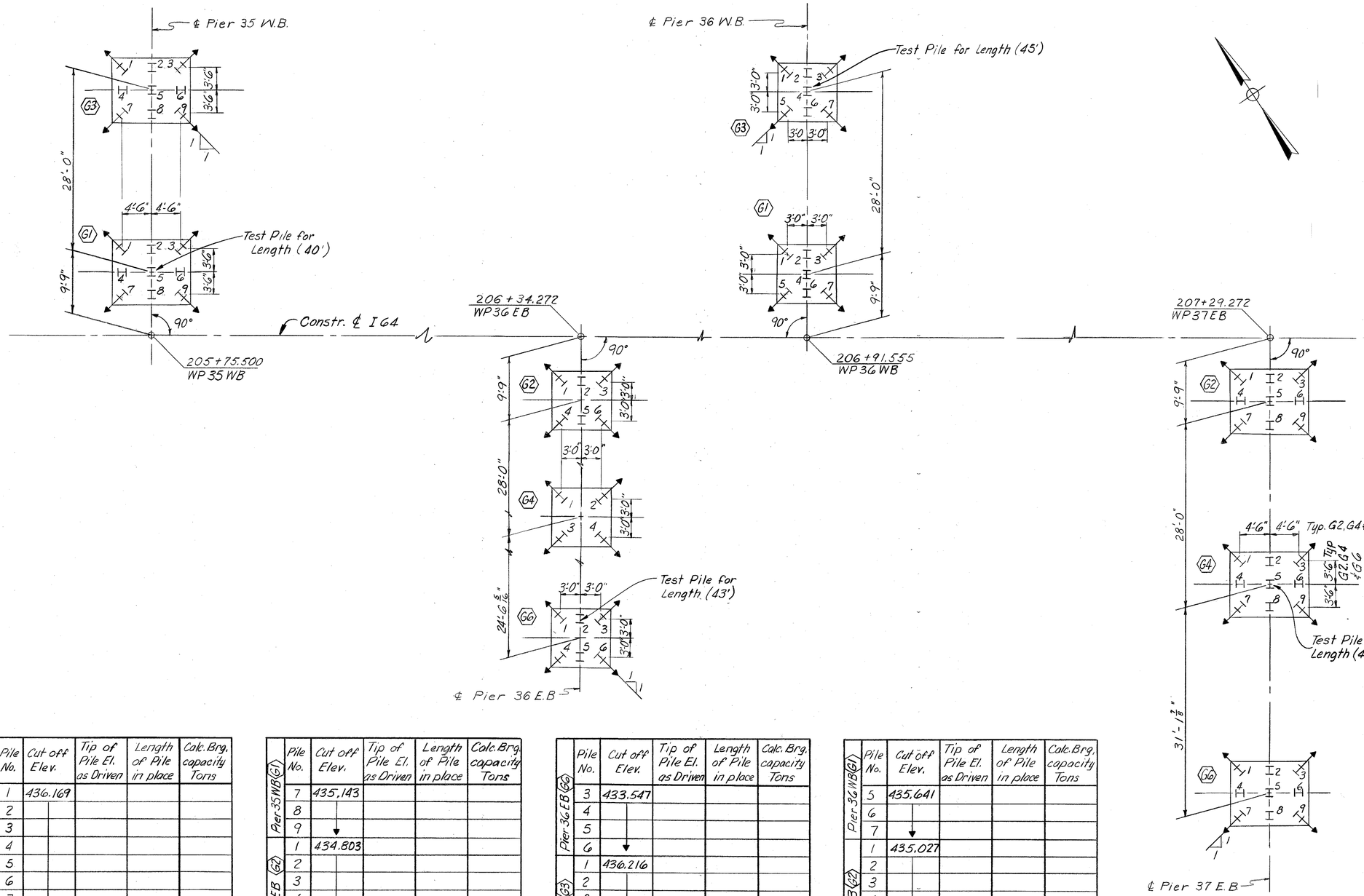

	Pile No.	Cutoff Elev.	Tip of Pile El. as Driven	Length of Pile in Place	Calc. Brg capacity Tons
Pier 37 EB G4	4	433.526			
	5	↓			
	6				
	7				
	8				
	9	↓			
Pier 37 EB G6	1	431.612			
	2				
	3				
	4				
	5				
	6				
	7				
	8				
	9	↓			

	Pile No.	Cut off Elev.	Tip of Pile El. as Driven	Length of Pile in place	Calc. Brg. capacity Tons
Pier 35 WB G3	1	436.169			
	2				
	3				
	4				
	5				
	6				
	7				
	8				
	9	↓			
Pier 35 WB G1	1	435.143			
	2				
	3				
	4				
	5				
	6	↓			

	Pile No.	Cut off Elev.	Tip of Pile El. as Driven	Length of Pile in place	Calc. Brg. capacity Tons
Pier 35 WB G1	7	435.143			
	8				
	9	↓			
Pier 36 EB G2	1	434.803			
	2				
	3				
	4				
	5				
	6	↓			
Pier 36 EB G4	1	434.295			
	2				
	3				
	4	↓			
G6	1	433.547			
	2	433.547			

	Pile No.	Cut off Elev.	Tip of Pile El. as Driven	Length of Pile in place	Calc. Brg. capacity Tons
Pier 36 EB G6	3	433.547			
	4				
	5				
	6	↓			
Pier 36 WB G3	1	436.216			
	2				
	3				
	4				
	5				
	6				
	7	↓			
G1	1	435.641			
	2				
	3				
	4	↓			

	Pile No.	Cut off Elev.	Tip of Pile El. as Driven	Length of Pile in place	Calc. Brg. capacity Tons
Pier 36 WB G1	5	435.641			
	6				
	7	↓			
Pier 37 EB G2	1	435.027			
	2				
	3				
	4				
	5				
	6				
	7				
	8				
	9	↓			
G4	1	433.526			
	2				
	3	↓			

See Sheet A19 for Notes.

PILE RECORD

SHEET A23

COMMONWEALTH OF KENTUCKY
DEPARTMENT OF HIGHWAYS
FRANKFORT
COUNTY OF
JEFFERSON

I 64-13TH ST. TO 7TH ST.
LOUISVILLE — LEXINGTON
ROAD SP 56-273-11L

STATION 208+08 **P. E. PROJECT NO.** I 64-2 (35) 3

CONSTRUCTION PROJECT NO.	MAINTENANCE PROJECT NO.	DRAWING NO.
		18572

LETTING DATE

DESIGNED BY
DETAILED BY
TRACED BY
CHECKED BY
CHECKED BY
CHECKED BY
DATE
REVISED

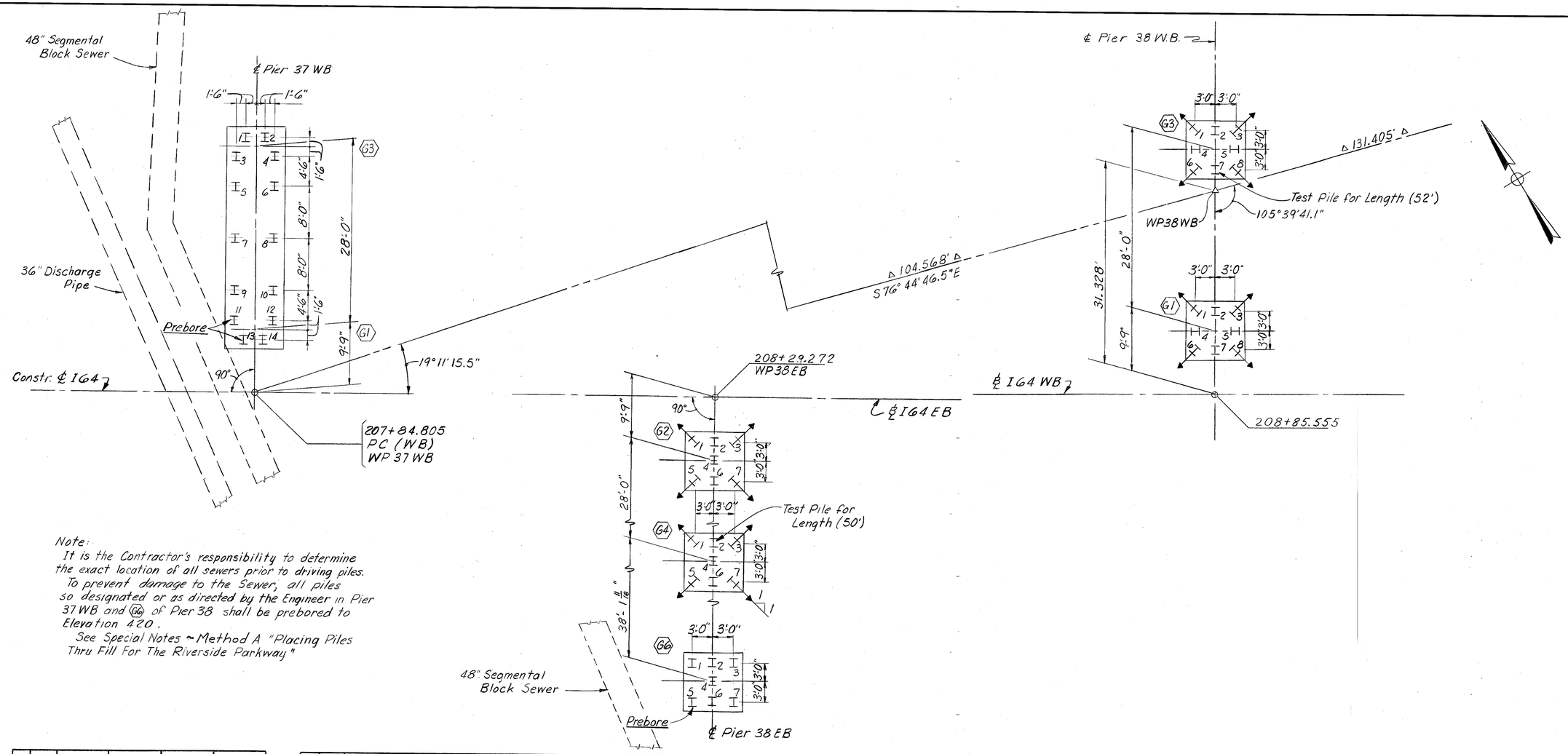

Note:
It is the Contractor's responsibility to determine the exact location of all sewers prior to driving piles. To prevent damage to the Sewer, all piles so designated or as directed by the Engineer in Pier 37 WB and G6 of Pier 38 shall be prebored to Elevation 420.
See Special Notes ~ Method A "Placing Piles Thru Fill For The Riverside Parkway"

	Pile No.	Cut off Elev.	Tip of Pile El. as Driven	Length of Pile in place	Calc. Brg. capacity Tons
Pier 37 WB G3 G1	1	434.557			
	2				
	3				
	4				
	5				
	6				
	7				
	8				
	9				
	10				
	11				
	12				
	13				
	14	↓			

	Pile No.	Cut off Elev.	Tip of Pile El. as Driven	Length of Pile in place	Calc. Brg. capacity Tons
Pier 38 EB G2	1	434.806			
	2				
	3				
	4				
	5				
	6				
	7	↓			
Pier 38 EB G4	1	433.106			
	2				
	3				
	4				
	5				
	6				
	7	↓			

	Pile No.	Cut off Elev.	Tip of Pile El. as Driven	Length of Pile in place	Calc. Brg. capacity Tons
Pier 38 EB G6	1	431.555			
	2				
	3				
	4				
	5				
	6				
	7	↓			
Pier 38 WB G1	1	437.935			
	2				
	3				
	4				
	5				
	6				
	7				
	8	↓			

	Pile No.	Cut off Elev.	Tip of Pile El. as Driven	Length of Pile in place	Calc. Brg. capacity Tons
Pier 38 WB G3	1	437.954			
	2				
	3				
	4				
	5				
	6				
	7				
	8	↓			

See Sheet A19 for Notes.

PILE RECORD

SHEET A24

COMMONWEALTH OF KENTUCKY
DEPARTMENT OF HIGHWAYS
FRANKFORT
COUNTY OF
JEFFERSON
I64-13TH ST. TO 7TH ST.
LOUISVILLE—LEXINGTON ROAD
STATION 208+08
SP 56-273-11L
P. E. PROJECT NO. I 64-2 (35) 3
CONSTRUCTION PROJECT NO.
MAINTENANCE PROJECT NO.
DRAWING NO. 1857Z

LETTING DATE

DESIGNED BY
DETAILED BY
TRACED BY
CHECKED BY
CHECKED BY
CHECKED BY
DATE
DATE May 71
DATE
DATE
DATE
DATE
REVISED
REVISED
REVISED
REVISED

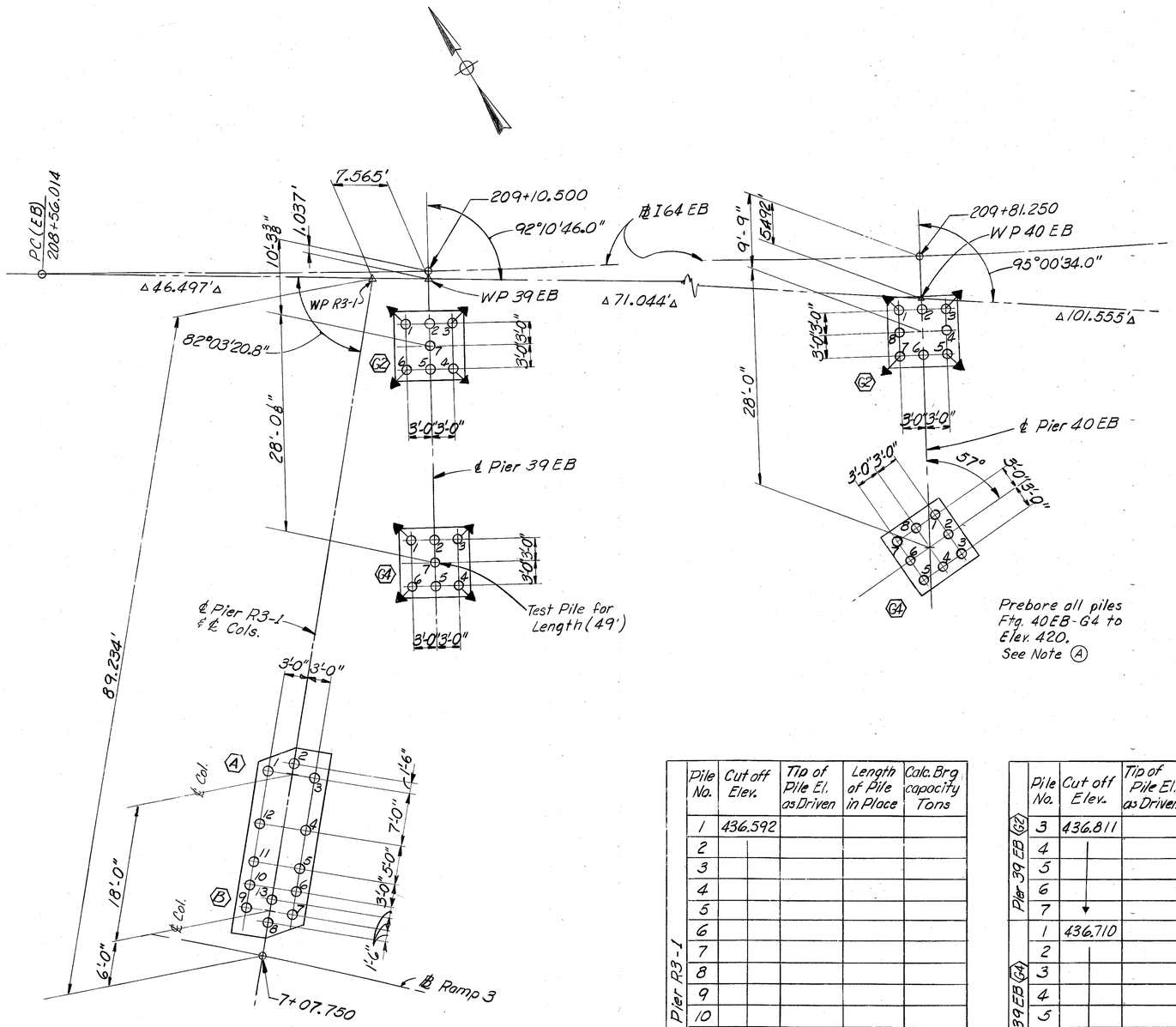

Prebore all piles in Pier R3-1 to Elev. 420
See Note (A)

	Pile No.	Cut off Elev.	Tip of Pile El. as Driven	Length of Pile in Place	Calc. Brg capacity Tons
Pier R3-1	1	436.592			
	2				
	3				
	4				
	5				
	6				
	7				
	8				
	9				
	10				
	11				
	12				
	13				
G2	1	436.811			
	2	436.811			

	Pile No.	Cut off Elev.	Tip of Pile El. as Driven	Length of Pile in Place	Calc. Brg capacity Tons
Pier 39 EB G2	3	436.811			
	4				
	5				
	6				
	7				
Pier 39 EB G4	1	436.710			
	2				
	3				
	4				
	5				
	6				
	7				
G2	1	439.769			
	2				
	3				

	Pile No.	Cut off Elev.	Tip of Pile El. as Driven	Length of Pile in Place	Calc. Brg capacity Tons
Pier 40 EB G2	4	439.769			
	5				
	6				
	7				
	8				
Pier 40 EB G4	1	439.919			
	2				
	3				
	4				
	5				
	6				
	7				
	8				

See Sheet A19 for Notes.

PILE RECORD

SHEET A25

COMMONWEALTH OF KENTUCKY
DEPARTMENT OF HIGHWAYS
FRANKFORT
COUNTY OF
JEFFERSON

I64-13TH ST. TO 7TH ST.
LOUISVILLE—LEXINGTON **ROAD**

STATION 208+08 **P. E. PROJECT NO.** I 64-2 (35) 3 SP 56-273-11L

CONSTRUCTION PROJECT NO.	MAINTENANCE PROJECT NO.	DRAWING NO.
		18572

LETTITG DATE

DESIGNED BY RHC CHECKED BY DATE REVISED
DETAILED BY RBS CHECKED BY RHC DATE May 71 REVISED
TRACED BY CHECKED BY DATE REVISED

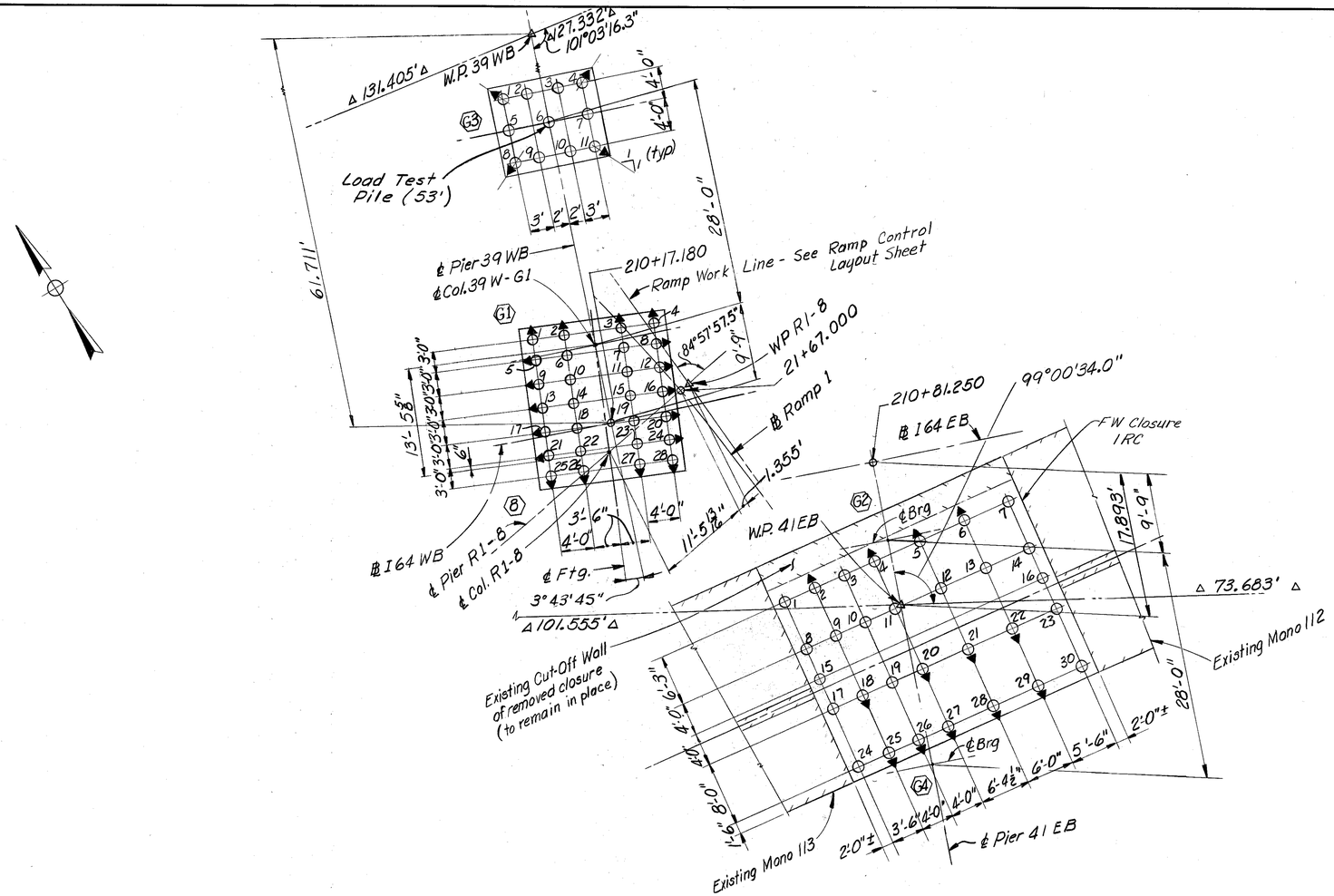

	Pile No.	Cut off Elev.	Tip of Pile El. as Driven	Length of Pile in place	Calc. Brg. capacity Tons
Pier 39 WB (63)	1	437.959			
	2				
	3				
	4				
	5				
	6				
	7				
	8				
	9				
	10				
	11				
39 WB (G1) & (8)	1	437.970			
	2				
	3				
	4				

LOAD TEST PILE

	Pile No.	Cut off Elev.	Tip of Pile El. as Driven	Length of Pile in place	Calc. Brg. capacity Tons
Pier 39 WB (G1) & (8)	5	437.970			
	6				
	7				
	8				
	9				
	10				
	11				
	12				
	13				
	14				
	15				
	16				
	17				
	18				
	19				

	Pile No.	Cut off Elev.	Tip of Pile El. as Driven	Length of Pile in place	Calc. Brg. capacity Tons
Pier 39 WB (G1) & (8)	20	437.970			
	21				
	22				
	23				
	24				
	25				
	26				
	27				
	28				

Piles for Floodwall are to be located relative to the existing Floodwall. Supports for the M.L. Superstructure are to be located relative to WP41EB.

* Precise elevation depends on existing elevation of adjacent Monoliths. See Sh. A37 & A38

Prebore all piles under Pier 41EB to Elev. 410. See Note (A)

See Sheet A19 for Notes.

	Pile No.	Cut off Elev.*	Tip of Pile El. as Driven	Length of Pile in place	Calc. Brg. capacity - Tons -
Pier 41 EB (62) & (64) (FW Closure 1RC)	1	436.9			
	2				
	3				
	4				
	5				
	6				
	7				
	8				
	9				
	10				
	11				
	12				
	13				
	14				
	15				
	16				
	17				
	18				
	19				
	20				
	21				
	22				
	23				
	24				
	25				
	26				
	27				
	28				
	29				
	30				

SHEET A26

COMMONWEALTH OF KENTUCKY
DEPARTMENT OF HIGHWAYS
FRANKFORT
COUNTY OF
JEFFERSON

I64-13TH ST. TO 7TH ST.
LOUISVILLE – LEXINGTON ROAD

STATION 208+08 | P. E. PROJECT NO. I 64-2 (35) 3 | SP 56-273-11L

CONSTRUCTION PROJECT NO. | MAINTENANCE PROJECT NO. | DRAWING NO. 18572

PILE RECORD

LETTING DATE

DESIGNED BY RHC | DATE | REVISED
DETAILED BY RBS | CHECKED BY RHC | DATE May 71 | REVISED
TRACED BY | CHECKED BY | DATE | REVISED

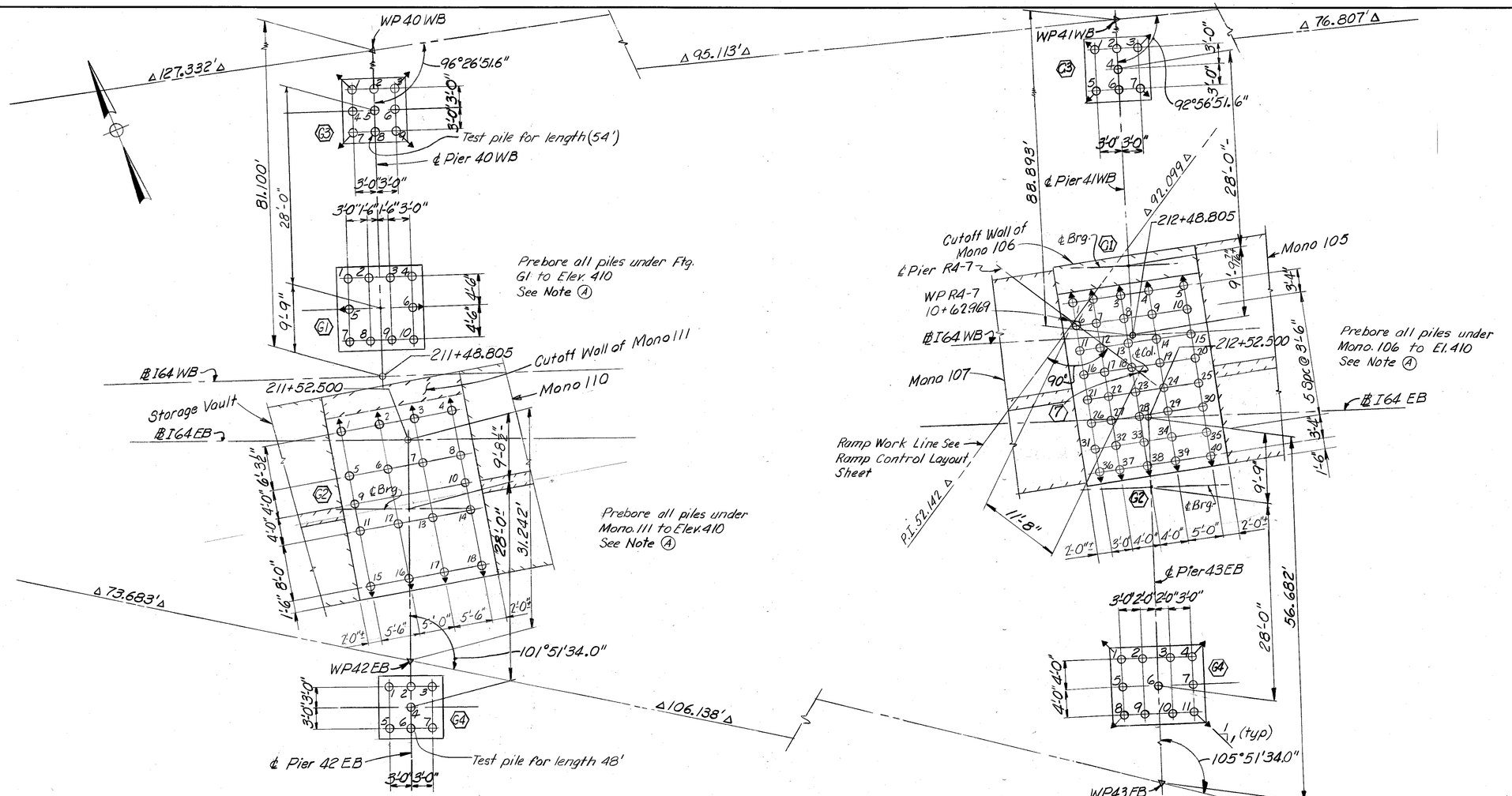

	Pile No.	Cut off Elev.	Tip of Pile El. as Driven	Length of Pile in place	Calc. Brg. capacity Tons
Pier 40 WB (G3)	1	437.596			
	2				
	3				
	4				
	5				
	6				
	7				
	8				
	9				
Pier 40 WB (G1)	1	437.576			
	2				
	3				
	4				
	5				
	6				

	Pile No.	Cut off Elev.	Tip of Pile El. as Driven	Length of Pile in place	Calc. Brg. capacity Tons
(G1)	7	437.576			
	8				
	9				
	10				
Pier 42 EB (G2) (Mono. 111)	1	436.88* ±			
	2				
	3				
	4				
	5				
	6				
	7				
	8				
	9				
	10				
	11				

	Pile No.	Cut off Elev.	Tip of Pile El. as Driven	Length of Pile in place	Calc. Brg. capacity Tons
(G2) (Mono. 111)	12	436.88* ±			
	13				
	14				
	15				
	16				
	17				
	18				
Pier 42 EB (G4)	1	437.764			
	2				
	3				
	4				
	5				
	6				
	7				
(G3)	1	436.396			

	Pile No.	Cut off Elev.	Tip of Pile El. as Driven	Length of Pile in place	Calc. Brg. capacity Tons
Pier 41 WB (G3)	2	436.396			
	3				
	4				
	5				
	6				
	7				
Mono 106**	1	435.40* ±			
	2				
	3				
	4				
	5				
	6				
	7				
	8				
	9				

	Pile No.	Cut off Elev.	Tip of Pile El. as Driven	Length of Pile in place	Calc. Brg. capacity Tons
Mono 106**	10	435.40* ±			
	11				
	12				
	13				
	14				
	15				
	16				
	17				
	18				
	19				
	20				
	21				
	22				
	23				
	24				
	25				
	26				
	27				
	28				
	29				
	30				
	31				
	32				
	33				
	34				
	35				
	36				
	37				
	38				
	39				
	40				
Pier 43 EB (G4)	1	437.316			
	2				
	3				
	4				
	5				
	6				
	7				
	8				
	9				
	10				
	11				

* Precise Elev. depends on existing elev. of adjacent monoliths. See Sheet A39-A41

** Substructure for 41WB-G1, 43EB-G4 & Pier R4-7.

See Sheet A19 for Notes.

SHEET A27

PILE RECORD

COMMONWEALTH OF KENTUCKY
DEPARTMENT OF HIGHWAYS
FRANKFORT
COUNTY OF
JEFFERSON

I64-13TH ST. TO 7TH ST.
LOUISVILLE—LEXINGTON ROAD

STATION 208+08 | P.E. PROJECT NO. I 64-2(35)3 | SP 56-273-11L

CONSTRUCTION PROJECT NO. | MAINTENANCE PROJECT NO. | DRAWING NO. 18572

LETTING DATE

DESIGNED BY TJC | DETAILED BY EBS | TRACED BY | CHECKED BY MWC | CHECKED BY | CHECKED BY | DATE May 71 | DATE | DATE | REVISED | REVISED | REVISED

FED. ROAD DIST.	STATE	FED. AID PROJ. NO.	FISCAL YEAR	SHEET NO.	TOTAL SHEETS
7	KY.				

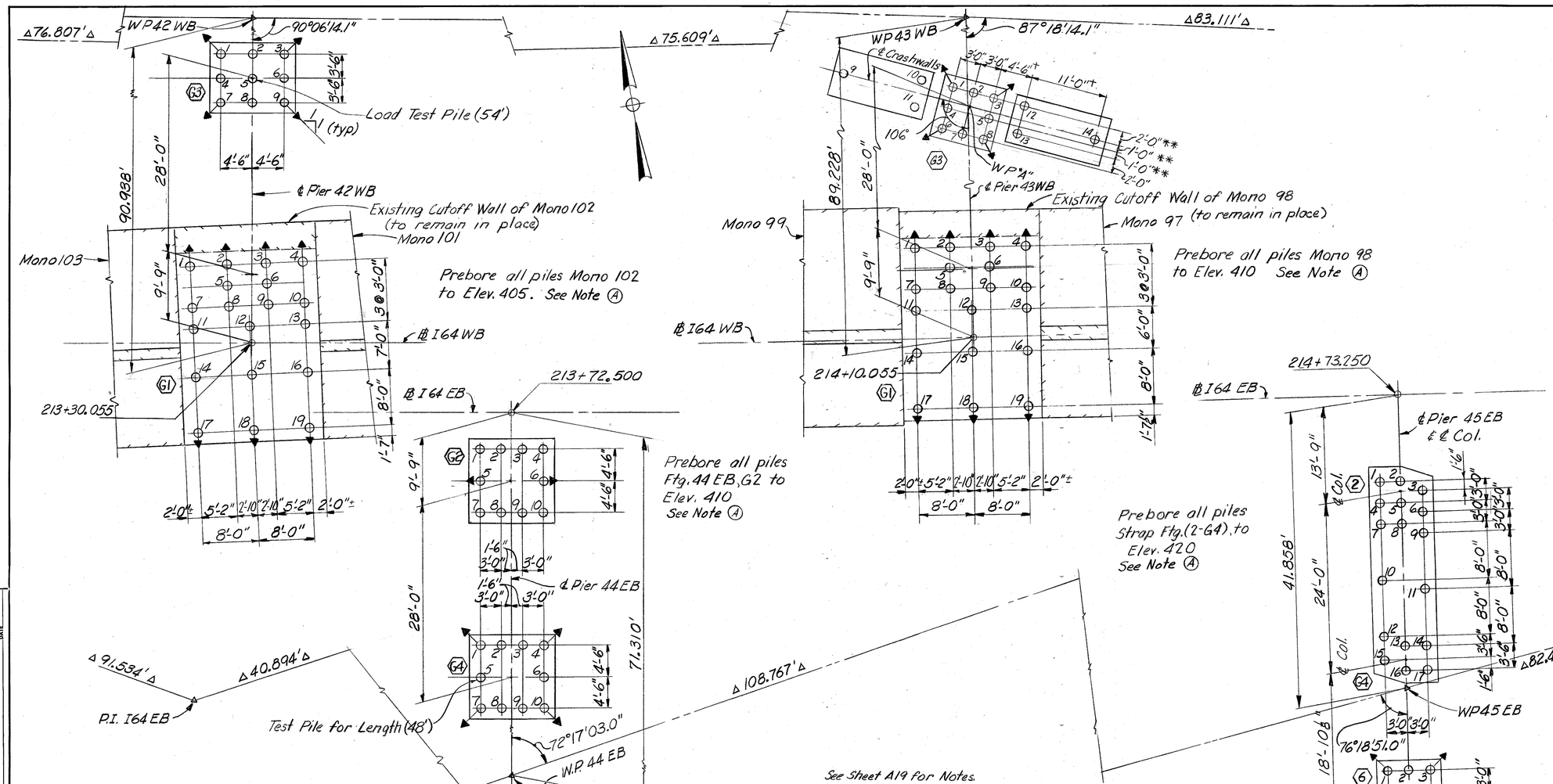

See Sheet A19 for Notes.

	Pile No.	Cut off Elev.	Tip of Pile El. as Driven	Length of Pile in place	Calc. Brg. capacity Tons
Pier 42WB (G3)	1	435.903			
	2	↓			
	3				
	4				
	5				
	6				
	7				
	8				
	9	↓			
(G1)	1	436.38*±			
	2				
	3				
	4				
	5				
	6				
	7	↓			

LOAD TEST PILE

	Pile No.	Cut off Elev.	Tip of Pile El. as Driven	Length of Pile in place	Calc. Brg. capacity Tons
Pier 42WB (G1) (Mono 102)	8	436.38*±			
	9	↓			
	10				
	11				
	12				
	13				
	14				
	15				
	16				
	17				
	18				
	19	↓			
(G2)	1	436.542			
	2				
	3				
	4	↓			

	Pile No.	Cut off Elev.	Tip of Pile El. as Driven	Length of Pile in place	Calc. Brg. capacity Tons
Pier 44EB (G2)	5	436.542			
	6	↓			
	7				
	8				
	9				
	10	↓			
Pier 44EB (G4)	1	436.191			
	2	↓			
	3				
	4				
	5				
	6				
	7				
	8				
	9				
	10	↓			

	Pile No.	Cut off Elev.	Tip of Pile El. as Driven	Length of Pile in place	Calc. Brg. capacity Tons
Pier 43WB (G3)	1	436.721			
	2	↓			
	3				
	4				
	5				
	6				
	7				
	8	↓			
	9	439.971			
	10	↓			
	11				
	12				
	13				
	14	↓			
(G1)	1	437.13*±			
	2	↓			

	Pile No.	Cut off Elev.	Tip of Pile El. as Driven	Length of Pile in place	Calc. Brg. capacity Tons
Pier 43WB (Mono. 98) (G1)	3	437.13*±			
	4	↓			
	5				
	6				
	7				
	8				
	9				
	10				
	11				
	12				
	13				
	14				
	15				
	16				
	17				
	18				
	19	↓			
Pier 45EB (G4)	1	436.966			
	2	↓			
	3				
	4				
	5				
	6				
	7				
	8				
	9				
	10				
	11				
	12				
	13				
	14				
	15				
	16				
	17	↓			
Pier 45EB (6)	1	438.476			
	2	↓			
	3				
	4				
	5				
	6	↓			
Pier 45EB (8)	1	438.493			
	2	↓			
	3				
	4				
	5				
	6	↓			

*Precise Elev. depends on existing elev. of adjacent monoliths. (For details see monolith 98 & 102)

**Pile spacing for Companion Crashwall similar.

PILE RECORD

SHEET A28

DESIGNED BY RHC	CHECKED BY RHC	DATE 4-Apr-71	REVISED DATE
DETAILED BY RBS	CHECKED BY	DATE	REVISED DATE
TRACED BY	CHECKED BY	DATE	REVISED DATE

COMMONWEALTH OF KENTUCKY

DEPARTMENT OF HIGHWAYS

FRANKFORT

COUNTY OF

JEFFERSON

I 64–13TH ST. TO 7TH ST.

LOUISVILLE — LEXINGTON ROAD

SP 56-273-11L

STATION 208+08 **PROJECT NO.** I 64-2(35)3

BRIDGE NUMBER	DRAWING NO.	INDEX
	18572	

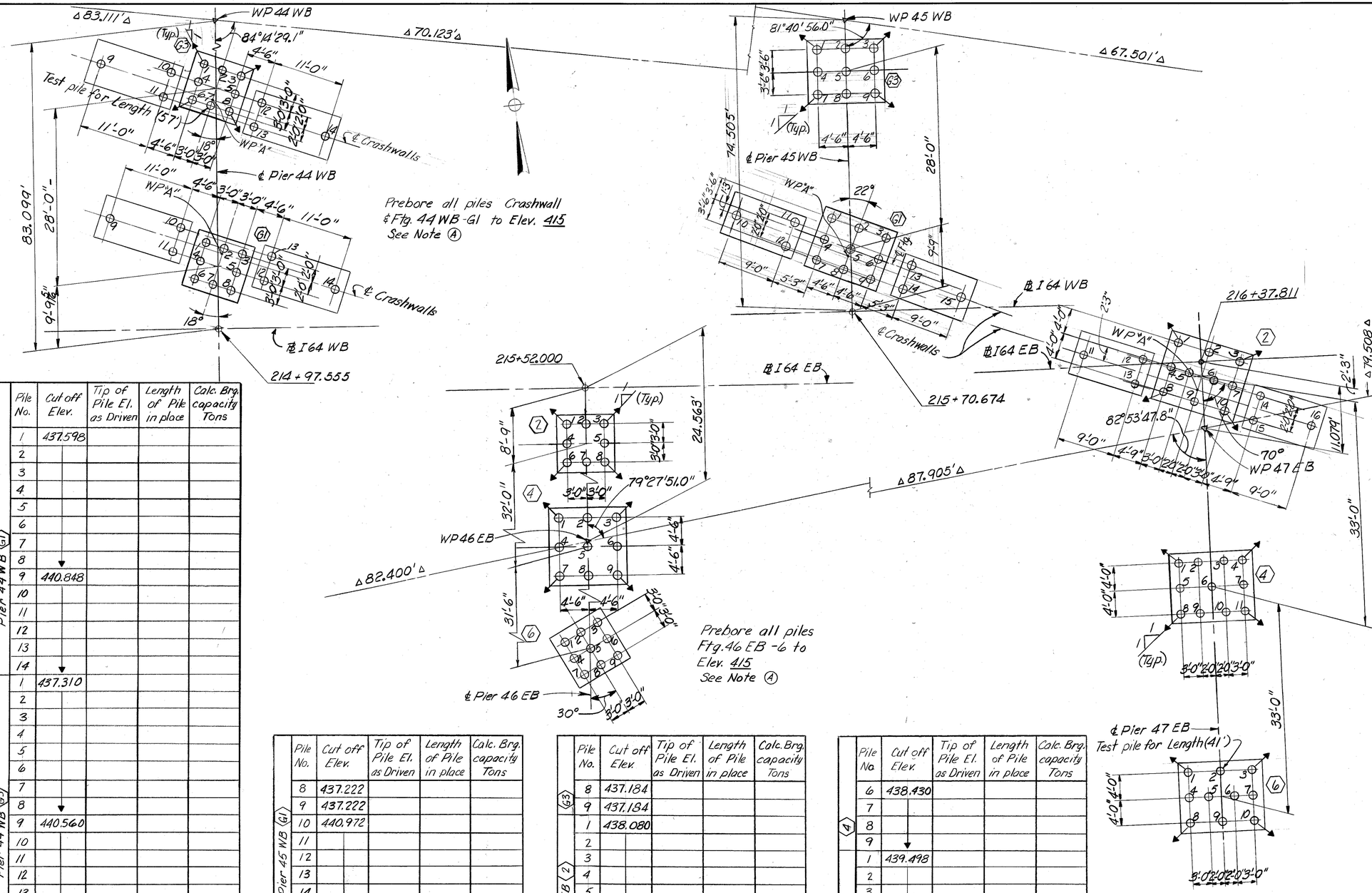

Pier	Pile No.	Cut off Elev.	Tip of Pile El. as Driven	Length of Pile in place	Calc. Brg. capacity Tons
Pier 44 WB (G1)	1	437.598			
	2				
	3				
	4				
	5				
	6				
	7				
	8				
	9	440.848			
	10				
	11				
	12				
	13				
	14				
Pier 44 WB (G3)	1	437.310			
	2				
	3				
	4				
	5				
	6				
	7				
	8				
	9	440.560			
	10				
	11				
	12				
	13				
	14				
Pier 45 WB (G1)	1	437.222			
	2				
	3				
	4				
	5				
	6				
	7				

Pier	Pile No.	Cut off Elev.	Tip of Pile El. as Driven	Length of Pile in place	Calc. Brg. capacity Tons
Pier 45 WB (G1)	8	437.222			
	9	437.222			
	10	440.972			
	11				
	12				
	13				
	14				
	15				
Pier 45 WB (G3)	1	437.184			
	2				
	3				
	4				
	5				
	6				
	7				

Pier	Pile No.	Cut off Elev.	Tip of Pile El. as Driven	Length of Pile in place	Calc. Brg. capacity Tons
Pier 45 WB (G3)	8	437.184			
	9	437.184			
Pier 46 EB (2)	1	438.080			
	2				
	3				
	4				
	5				
	6				
	7				
	8				
Pier 46 EB (4)	1	438.430			
	2				
	3				
	4				
	5				

Pier	Pile No.	Cut off Elev.	Tip of Pile El. as Driven	Length of Pile in place	Calc. Brg. capacity Tons
Pier 46 EB (4)	6	438.430			
	7				
	8				
	9				
Pier 46 EB (6)	1	439.498			
	2				
	3				
	4				
	5				
	6				
	7				
	8				
	9				
Pier 47 EB (2)	1	437.162			
	2	437.162			

Pier	Pile No.	Cut off Elev.	Tip of Pile Elev. as Driven	Length of Pile in place	Calc. Brg. capacity Tons
Pier 47 EB (2)	3	437.162			
	4				
	5				
	6				
	7				
	8				
	9				
	10				
	11	440.912			
	12				
	13				
	14				
	15				
	16				
Pier 47 EB (4)	1	437.295			
	2				
	3				
	4				
	5				
	6				
	7				
	8				
	9				
	10				
	11				
Pier 47 EB (6)	1	438.461			
	2				
	3				
	4				
	5				
	6				
	7				
	8				
	9				
	10				

See Sheet A19 for Notes.

PILE RECORD

SHEET A29

COMMONWEALTH OF KENTUCKY
DEPARTMENT OF HIGHWAYS
FRANKFORT
COUNTY OF
JEFFERSON

I64-13TH ST. TO 7TH ST.
LOUISVILLE – LEXINGTON ROAD

STATION 208+08 | P. E. PROJECT NO. I64-2(35)3 | SP 56-273-11L

CONSTRUCTION PROJECT NO. | MAINTENANCE PROJECT NO. | DRAWING NO. 18572

LETTING DATE

DESIGNED BY ___ DATE ___ REVISED ___
DETAILED BY RBS & DBF DATE June 71 REVISED ___
TRACED BY ___ DATE ___ REVISED ___
CHECKED BY ___ DATE ___
CHECKED BY RHC DATE ___
CHECKED BY ___ DATE ___

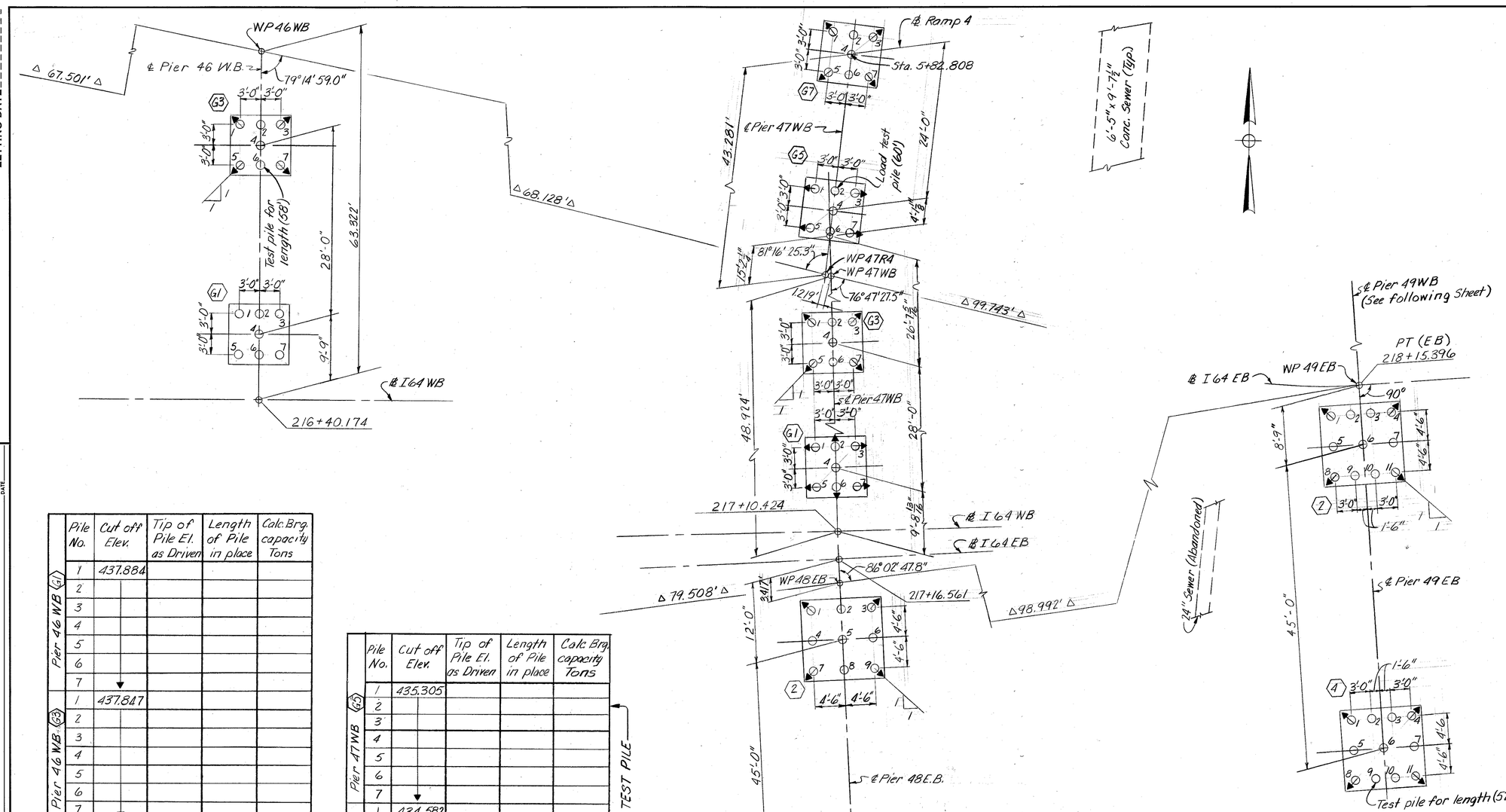

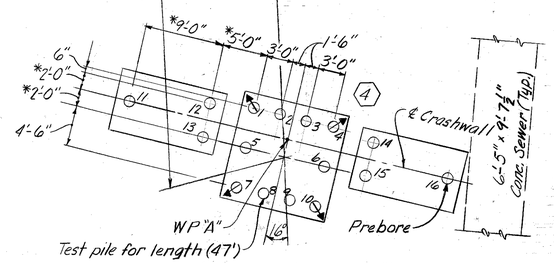

Notes:

It is the Contractors responsibility to determine the exact location of all sewers prior to driving piles.

To prevent damage to the sewer, pile No. 16, or others if directed by the Engineer, in ftg. (4) of pier 48EB shall be prebored to elevation 410.

See Special Notes - Method A "Placing Piles Thru Fill For The Riverside Parkway."

* Pile spacing for companion Crashwall similar.

For other utilities see Layout sheet.

See Sheet A19 for Notes.

	Pile No.	Cut off Elev.	Tip of Pile El. as Driven	Length of Pile in place	Calc. Brg. capacity Tons
Pier 46 WB (G1)	1	437.884			
	2				
	3				
	4				
	5				
	6				
	7	↓			
Pier 46 WB (G3)	1	437.847			
	2				
	3				
	4				
	5				
	6				
	7	↓			
Pier 47WB (G1)	1	436.817			
	2				
	3				
	4				
	5				
	6				
	7	↓			
Pier 47WB (G3)	1	436.759			
	2				
	3				
	4				
	5				
	6				
	7	↓			

	Pile No.	Cut off Elev.	Tip of Pile El. as Driven	Length of Pile in place	Calc. Brg. capacity Tons
Pier 47WB (G5)	1	435.305			
	2				
	3				
	4				
	5				
	6				
	7	↓			
Pier 47WB (G7)	1	434.582			
	2				
	3				
	4				
	5				
	6				
	7	↓			
Pier 48 EB (2)	1	437.409			
	2				
	3				
	4				
	5				
	6				
	7				
	8				
	9	↓			

LOAD TEST PILE

	Pile No.	Cut off Elev.	Top of Pile El. as Driven	Length of Pile in place	Calc. Brg. capacity Tons
Pier 48 EB (4)	1	437.407			
	2				
	3				
	4				
	5				
	6				
	7				
	8				
	9				
	10	↓			
	11	440.657			
	12				
	13				
	14				
	15				
	16	↓			
Pier 49EB (2)	1	437.120			
	2				
	3				
	4				
	5				
	6				
	7				
	8				
	9				
	10				
	11	↓			
Pier 49EB (4)	1	436.619			
	2				
	3				
	4				
	5				
	6				
	7				
	8				
	9				
	10				
	11	↓			

SHEET A30

COMMONWEALTH OF KENTUCKY
DEPARTMENT OF HIGHWAYS
FRANKFORT
COUNTY OF
JEFFERSON

I64-13TH ST. TO 7TH ST.
LOUISVILLE—LEXINGTON
ROAD

STATION 208+08 | P. E. PROJECT NO. I64-2(35)3 | SP 56-273-11L

CONSTRUCTION PROJECT NO. | MAINTENANCE PROJECT NO. | DRAWING NO. 18572

PILE RECORD

LETTING DATE

DESIGNED BY CGH | DETAILED BY | TRACED BY | CHECKED BY RHC | CHECKED BY | CHECKED BY | DATE 5-71 | DATE | DATE | REVISED | REVISED | REVISED

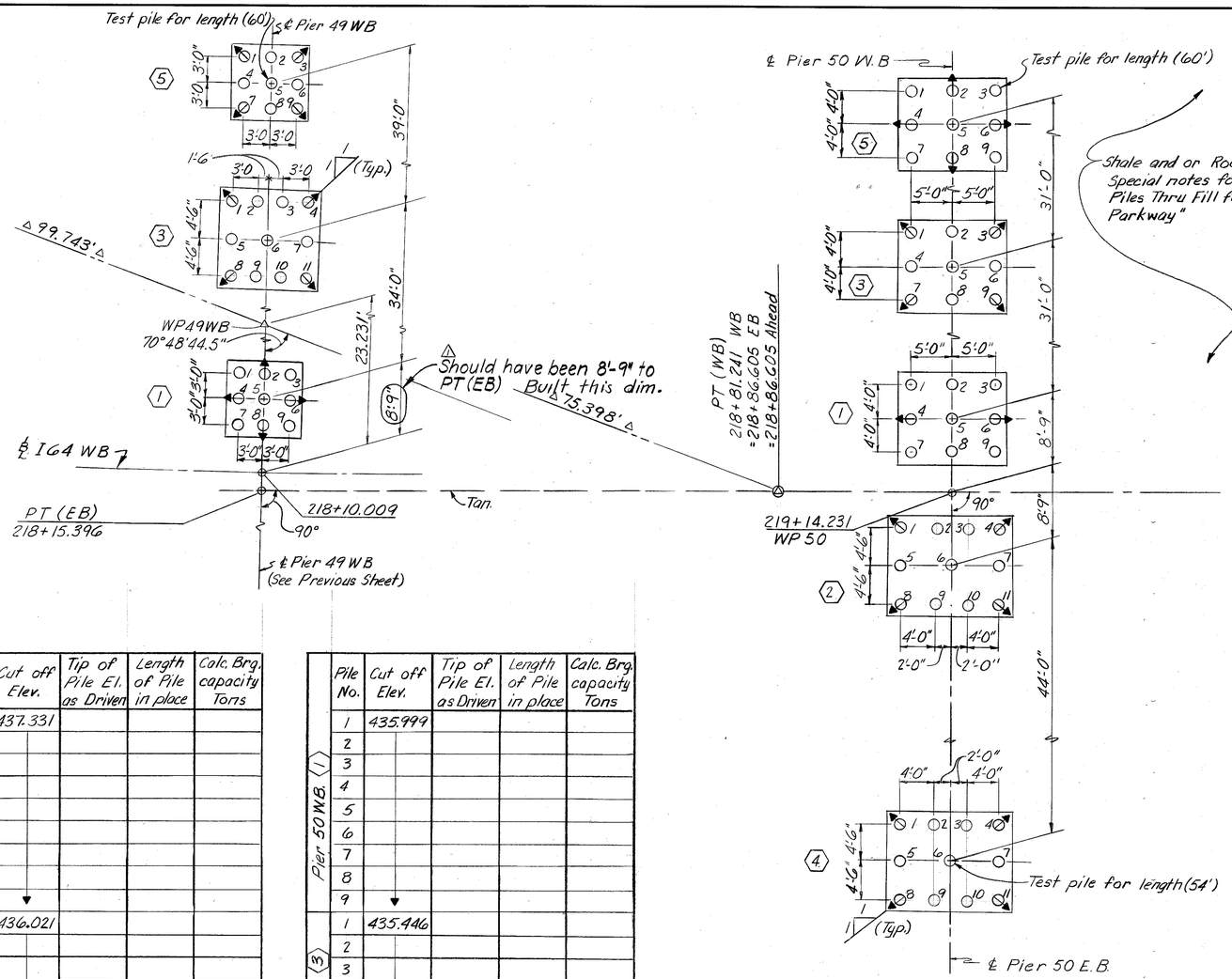

	Pile No.	Cut off Elev.	Tip of Pile El. as Driven	Length of Pile in place	Calc. Brg. capacity Tons
Pier 49 W.B. (1)	1	437.331			
	2	↓			
	3				
	4				
	5				
	6				
	7				
	8				
	9	↓			
Pier 49 W.B. (3)	1	436.021			
	2				
	3				
	4				
	5				
	6				
	7				
	8				
	9				
	10				
	11	↓			
Pier 49 W.B. (5)	1	435.597			
	2				
	3				
	4				
	5				
	6				
	7				
	8				
	9	↓			

	Pile No.	Cut off Elev.	Tip of Pile El. as Driven	Length of Pile in place	Calc. Brg. capacity Tons
Pier 50 W.B. (1)	1	435.999			
	2				
	3				
	4				
	5				
	6				
	7				
	8				
	9	↓			
Pier 50 W.B. (3)	1	435.446			
	2				
	3				
	4				
	5				
	6				
	7				
	8				
	9	↓			
Pier 50 W.B. (5)	1	434.892			
	2				
	3				
	4				
	5				
	6				
	7				
	8				
	9	↓			
(2)	1	436.279			
	2	436.279			

	Pile No.	Cut off Elev.	Tip of Pile El. as Driven	Length of Pile in place	Calc. Brg. capacity Tons
Pier 50 E.B. (2)	3	436.279			
	4				
	5				
	6				
	7				
	8				
	9				
	10				
	11	↓			
(4)	1	436.624			
	2				
	3				
	4	↓			

	Pile No.	Cut off Elev.	Tip of Pile El. as Driven	Length of Pile in place	Calc. Brg. capacity Tons
Pier 50 E.B. (4)	5	436.624			
	6				
	7				
	8				
	9				
	10				
	11	↓			
Pier 51 E.B. (2)	1	436.833			
	2				
	3				
	4				
	5				
	6	↓			

	Pile No.	Cut off Elev.	Tip of Pile El. as Driven	Length of Pile in place	Calc. Brg. capacity Tons
(2)	7	436.833			
	8				
	9	↓			
Pier 51 E.B. (4)	1	437.552			
	2				
	3				
	4				
	5				
	6				
	7				
	8				
	9	↓			
Pier 51 W.B. (1)	1	436.720			
	2				
	3				
	4				
	5				
	6				
	7				
	8	↓			
Pier 51 W.B. (3)	1	436.201			
	2				
	3				
	4				
	5				
	6				
	7				
	8	↓			
Pier 51 W.B. (5)	1	435.411			
	2				
	3				
	4				
	5				
	6				
	7				
	8	↓			

See Sheet A19 for Notes.

PILE RECORD

SHEET A31

COMMONWEALTH OF KENTUCKY
DEPARTMENT OF HIGHWAYS
FRANKFORT
COUNTY OF
JEFFERSON
I64-13TH ST. TO 7TH ST.
LOUISVILLE—LEXINGTON ROAD
STATION 208+08
SP 56-273-11L
P. E. PROJECT NO. I 64-2 (35) 3
CONSTRUCTION PROJECT NO.
MAINTENANCE PROJECT NO.
DRAWING NO. 18572

LETTING DATE

DESIGNED BY: CHECKED BY: DATE: REVISED:
DETAILED BY: Black CHECKED BY: RHC DATE: June 71 REVISED:
TRACED BY: CHECKED BY: DATE: REVISED:
Pier 49 W.B. △
4-75

Note :

① Only corner piles shown. See Pile Record Sheet for Type & Location of others.

② For Location of dowels See Sheet A35 Place dowels in footing with lower end radially out.

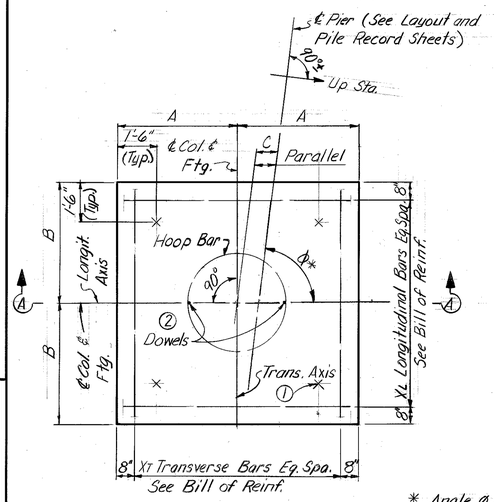

FOOTING PLAN ①
TYPE I
(Transverse Steel Bottom)

* Angle Ø is always in the 1st. Quadrant and measured between the ℄ Pier and Longitudinal Axis of the footing.

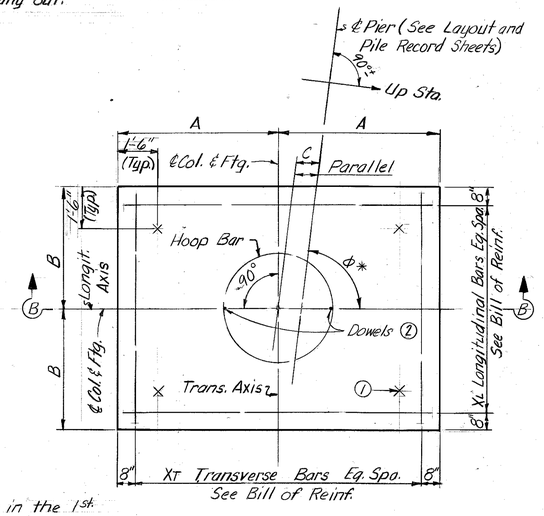

FOOTING PLAN ①
TYPE II
(Longitudinal Steel Bottom)

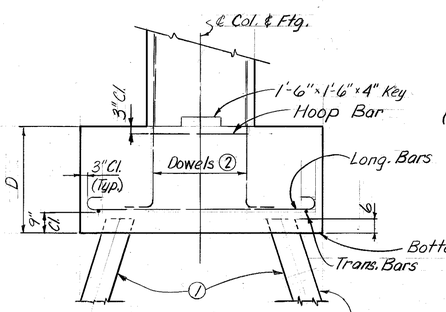

SECTION A-A

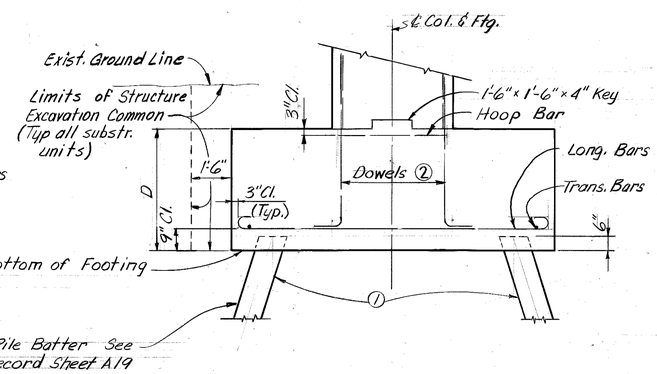

SECTION B-B

Footing Nº	Type	Ø° *	Bott. Ftg. Elev.	A	B	C	D	XT (Trans.)	XL (Long.)	Nº ② Dowels
26W-G1	I	90	441.724	4'-6"	5'-6"	0"	4'-6"	11	11	17
26W-G3	I		441.434	4'-6"	5'-6"	0"	4'-6"	11	11	17
26E-G2	I		441.564	4'-6"	5'-6"	0"	4'-6"	12	11	15
26E-G4	I		441.523	4'-6"	5'-6"	0"	4'-6"	12	11	15
27W-G1	II		441.672	6'-6"	5'-6"	0"	4'-6"	12	17	15
27W-G3	II		441.332	6'-6"	5'-6"	0"	4'-6"	12	17	15
27E-G2	II		441.640	6'-6"	5'-6"	0"	4'-6"	12	17	21
27E-G4	II	48	441.600	6'-6"	5'-6"	0"	4'-6"	12	17	21
28W-G1	I	62	441.177	4'-6"	5'-6"	0"	4'-6"	11	11	15
28W-G3	I	90	441.289	4'-6"	5'-6"	0"	4'-6"	11	11	15
28E-G2	I	65	441.842	4'-6"	4'-6"	0"	4'-6"	11	11	15
28E-G4	I	90	442.536	4'-6"	4'-6"	0"	4'-6"	11	11	15
29W-G1	I	90	442.869	4'-6"	4'-6"	0"	4'-0"	16	16	18
29W-G3	I	74	441.502	4'-6"	4'-6"	0"	4'-0"	15	15	18
29E-G2	I	90	443.298	4'-6"	4'-6"	0"	4'-0"	12	11	15
29E-G4	I	63	443.281	4'-6"	5'-6"	0"	4'-0"	13	11	15
30W-1	II	69	440.196	7'-6"	6'-6"	1 7/32"	5'-0"	18	24	31
30W-G3	II	80	440.060	6'-6"	5'-6"	0"	4'-6"	12	19	21
30E-G4	II	69	442.597	6'-6"	5'-6"	0"	4'-6"	14	18	28
31W-G3	I	70	440.235	4'-6"	5'-6"	0"	4'-6"	12	12	15
31E-2	I	70	440.433	7'-6"	7'-6"	1 3/8"	5'-0"	27	20	19
31E-G4	I	90	440.586	4'-6"	5'-6"	0"	4'-6"	12	12	15
32W-G1	I	90	439.168	4'-6"	5'-6"	0"	4'-6"	12	12	15
32W-3	I	70	438.845	7'-6"	7'-6"	1 5/16"	5'-0"	29	28	19
32E-G2	I	90	440.666	4'-6"	4'-6"	0"	4'-0"	11	11	12
32E-G4	I		440.143	4'-6"	4'-6"	0"	4'-0"	11	11	12
33W-G1	II		436.966	6'-6"	5'-6"	0"	4'-6"	12	20	21
33W-G3	II		437.758	6'-0"	5'-0"	0"	4'-6"	11	17	15
33W-G5	II		437.946	6'-0"	5'-0"	0"	4'-6"	11	17	15
33E-G2	I	90	438.419	4'-6"	4'-6"	0"	4'-0"	11	9	12
33E-G4	I	90	437.616	4'-6"	4'-6"	0"	4'-0"	11	9	12
34W-G1	I	52	434.973	4'-6"	4'-6"	0"	5'-0"	11	9	18
34W-G3	I	90	435.788	4'-6"	4'-6"	0"	5'-0"	11	9	18
R1-17A	I		436.084	4'-6"	4'-6"	0"	5'-0"	9	9	18
R1-17B	I		436.500	4'-6"	4'-6"	0"	5'-0"	9	9	18
34E-G2	II		435.803	7'-6"	6'-0"	0"	5'-0"	16	22	24
34E-G4	II		435.572	7'-6"	6'-0"	0"	5'-0"	16	22	29
35W-G1	II		434.643	6'-0"	5'-0"	0"	4'-6"	11	17	15
35W-G3	II		435.669	6'-0"	5'-0"	0"	4'-6"	11	17	15
35E-G2	I	90	434.761	7'-6"	7'-6"	0"	4'-6"	36	27	18
35E-G4	I	90	434.199	7'-6"	7'-6"	0"	4'-6"	36	27	18
36W-G1	I		435.141	4'-6"	4'-6"	0"	4'-0"	11	11	12
36W-G3	I		435.716	4'-6"	4'-6"	0"	4'-0"	11	11	12
36E-G2	I		434.303	4'-6"	4'-6"	0"	4'-0"	13	13	12
36E-G4	I		433.795	4'-6"	4'-6"	0"	4'-0"	9	9	12
36E-G6	I		433.047	4'-6"	4'-6"	0"	4'-0"	13	13	12
37E-G2	II		434.527	6'-0"	5'-0"	0"	4'-6"	11	17	15
37E-G4	II		433.026	6'-0"	5'-0"	0"	4'-6"	11	17	15
37E-G6	II		431.112	6'-0"	5'-0"	0"	4'-6"	11	17	15
38W-G1	I		437.435	4'-6"	4'-6"	0"	4'-0"	16	16	12
38W-G3	I	90	437.454	4'-6"	4'-6"	0"	4'-0"	15	14	12
38E-G2	I	90	434.306	4'-6"	4'-6"	0"	4'-0"	11	9	12
38E-G4	I		432.606	4'-6"	4'-6"	0"	4'-0"	11	9	12
38E-G6	I		431.055	4'-6"	4'-6"	0"	4'-0"	12	11	12
39W-G3	II		437.459	6'-6"	5'-6"	0"	4'-6"	13	15	15
39E-G2	I		436.311	4'-6"	4'-6"	0"	5'-0"	9	9	18
39E-G4	I		436.210	4'-6"	4'-6"	0"	5'-0"	9	9	18
40W-G1	I		437.076	6'-0"	6'-0"	0"	4'-0"	21	15	14
40W-G3	I		437.096	4'-6"	4'-6"	0"	4'-0"	11	9	12
40E-G2	I	90	439.269	4'-6"	4'-6"	0"	4'-0"	10	9	12

Footing Nº	Type	Ø° *	Bott. Ftg. Elev.	A	B	C	D	XT (Trans.)	XL (Long.)	Nº ② Dowels
40E-G4	I	57	439.419	4'-6"	4'-6"	0"	4'-0"	12	12	12
41W-G3	I	90	435.896	4'-6"	4'-6"	0"	4'-0"	10	9	12
42W-G3	II	90	435.403	6'-0"	5'-0"	0"	4'-6"	11	12	15
42E-G4	I	90	437.264	4'-6"	4'-6"	0"	4'-0"	13	8	12
43W-G3	I	106	436.221	4'-6"	4'-6"	0"	4'-0"	12	11	12
43E-G4	II	90	436.816	6'-6"	5'-6"	0"	4'-6"	14	16	17
44W-G1	I	108	437.098	4'-6"	4'-6"	0"	4'-0"	11	11	12
44W-G3	I	108	436.810	4'-6"	4'-6"	0"	4'-0"	11	11	12
44E-G2	I	90	436.042	6'-0"	6'-0"	0"	4'-6"	17	12	15
44E-G4	I	90	435.691	6'-0"	6'-0"	0"	4'-6"	17	12	15
45W-G1	II	112	436.722	6'-0"	5'-0"	0"	4'-6"	11	12	15
45W-G3	II	90	436.684	6'-0"	5'-0"	0"	4'-6"	11	12	15
45E-G6	I		437.976	4'-6"	4'-6"	0"	5'-0"	9	9	18
45E-G8	I		437.993	4'-6"	4'-6"	0"	5'-0"	9	9	18
46W-G1	I		437.384	4'-6"	4'-6"	0"	4'-0"	10	9	12
46W-G3	I		437.347	4'-6"	4'-6"	0"	4'-0"	10	9	12
46E-2	I		437.580	4'-6"	4'-6"	0"	4'-0"	11	9	12
46E-4	I	90	437.930	6'-0"	6'-0"	0"	4'-0"	17	16	12
46E-6	I	60	438.998	4'-6"	4'-6"	0"	4'-0"	10	9	12
47W-G1	I	90	436.317	4'-6"	4'-6"	0"	5'-0"	9	9	18
47W-G3	I	90	436.259	4'-6"	4'-6"	0"	5'-0"	9	9	18
47W-G5	I	90	434.805	4'-6"	4'-6"	0"	5'-0"	9	9	18
47W-G7	I	90	434.082	4'-6"	4'-6"	0"	5'-0"	9	9	18
47E-2	II	110	436.662	6'-6"	5'-6"	0"	4'-6"	12	15	15
47E-4	II	90	436.795	6'-6"	5'-6"	0"	4'-6"	14	15	15
47E-6	II	90	437.961	6'-6"	5'-6"	0"	4'-6"	12	15	15
48E-2	I	90	436.909	6'-0"	6'-0"	0"	4'-0"	17	16	16
48E-4	I	106	436.907	6'-0"	6'-0"	0"	4'-0"	18	14	16
49W-1	I	90	436.831	4'-6"	4'-6"	0"	4'-0"	10	9	12
49W-3	I	90	435.521	6'-0"	6'-0"	0"	5'-0"	15	11	18
49W-5	I	90	435.097	4'-6"	4'-6"	0"	4'-0"	11	10	12
49E-2	I		436.620	6'-0"	6'-0"	0"	4'-6"	17	12	15
49E-4	I		436.119	6'-0"	6'-0"	0"	4'-6"	17	12	15
50W-1	II		435.499	6'-6"	5'-6"	0"	4'-6"	12	17	15
50W-3	II		434.946	6'-6"	5'-6"	0"	4'-6"	12	17	15
50W-5	II		434.392	6'-6"	5'-6"	0"	4'-6"	12	17	15
50E-2	II		435.779	7'-6"	6'-0"	0"	5'-0"	13	18	18
50E-4	II		436.124	7'-6"	6'-0"	0"	5'-0"	13	18	18
51W-1	I		436.220	4'-6"	4'-6"	0"	4'-0"	13	13	12
51W-3	I		435.701	4'-6"	4'-6"	0"	4'-0"	13	13	12
51W-5	I		434.911	4'-6"	4'-6"	0"	4'-0"	11	11	12
51E-2	I		436.333	4'-6"	4'-6"	0"	4'-0"	10	10	12
51E-4	I	90	437.052	4'-6"	4'-6"	0"	4'-0"	10	10	12

Work this Sheet with Sheets A34 thru A36

SUBSTRUCTURE FOOTING DETAILS

SHEET A32

COMMONWEALTH OF KENTUCKY
DEPARTMENT OF HIGHWAYS
FRANKFORT
COUNTY OF
JEFFERSON
I64-13TH ST. TO 7TH ST.
LOUISVILLE—LEXINGTON ROAD
SP 56-273-11L
STATION 208+08 **P. E. PROJECT NO.** I 64-2 (35) 3

CONSTRUCTION PROJECT NO.	MAINTENANCE PROJECT NO.	DRAWING NO.
		18572

LETTITG DATE

DATE DATE DATE

DESIGNED BY DATE REVISED
DETAILED BY C.B.F. CHECKED BY RHC DATE 4-16-71 REVISED
TRACED BY CHECKED BY DATE REVISED

LETTITG DATE

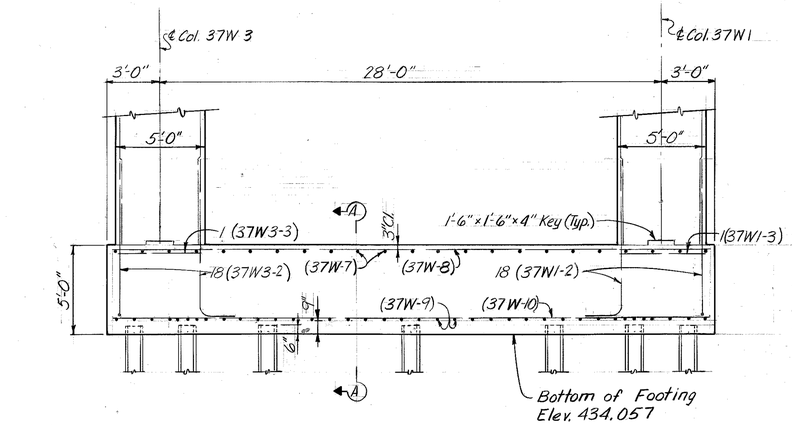

ELEVATION
PIER 37WB

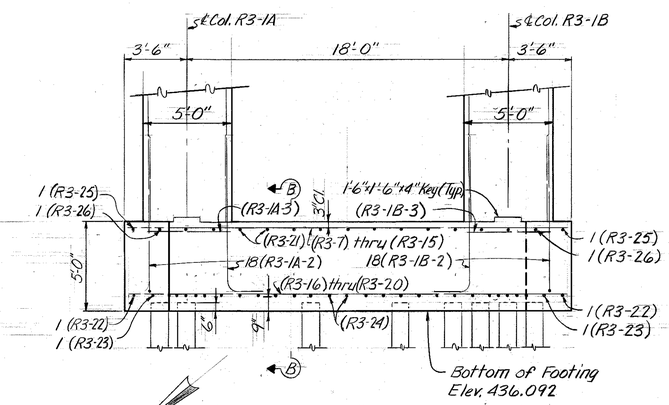

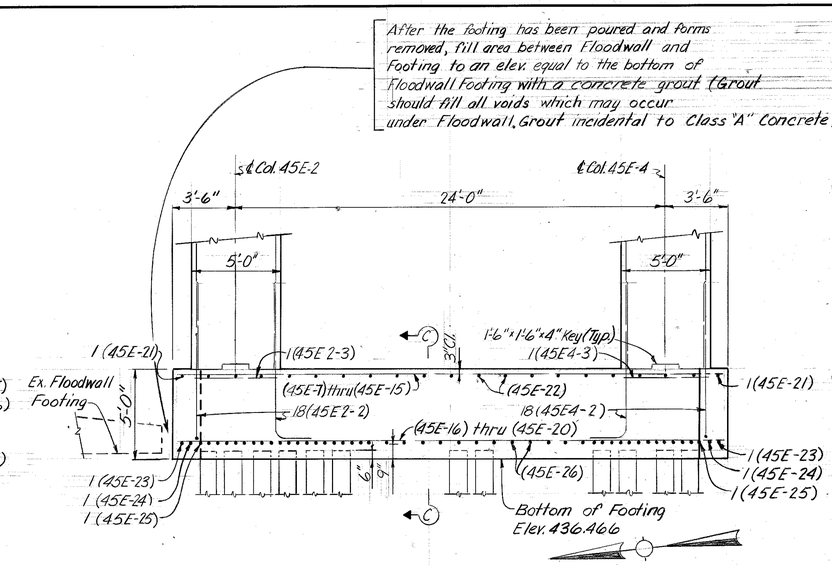

ELEVATION
PIER 45EB

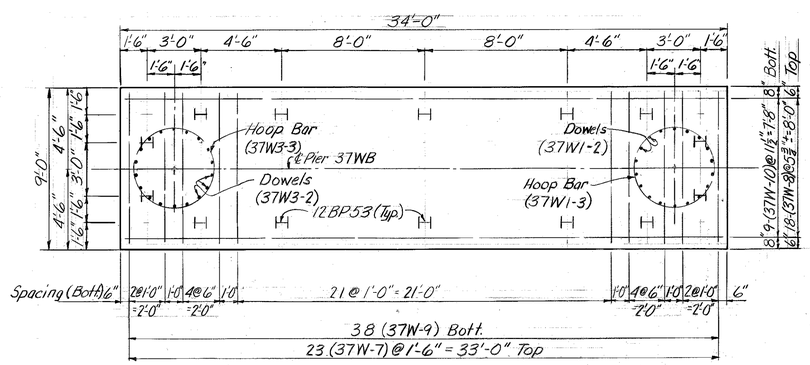

FOOTING PLAN
PIER 37WB

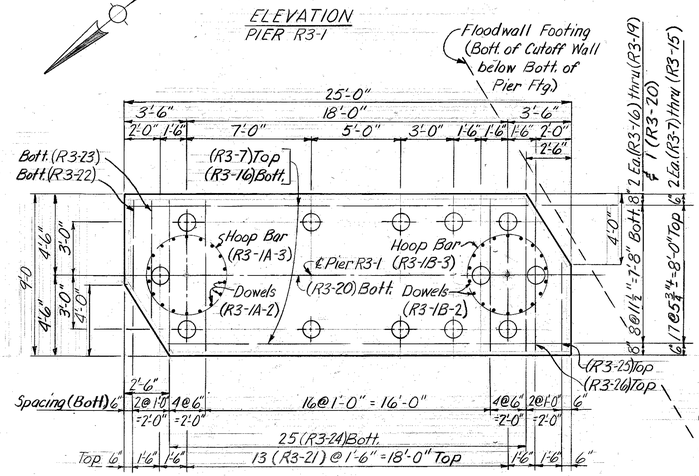

FOOTING PLAN
PIER R3-1

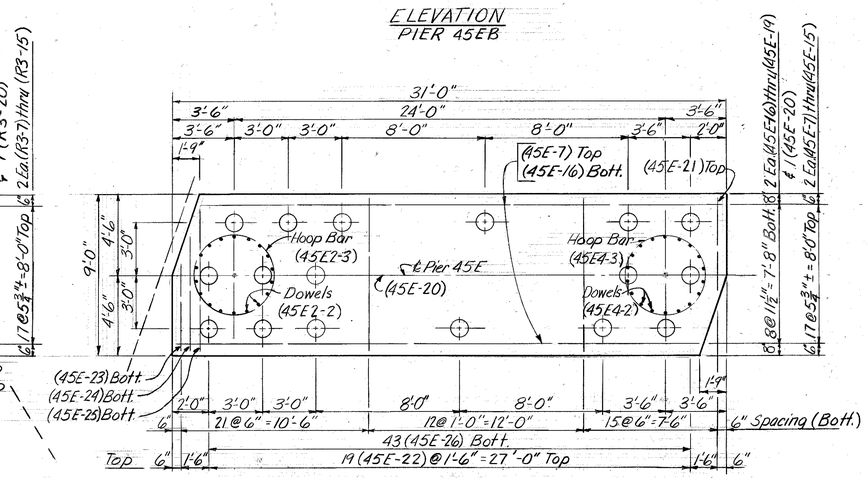

FOOTING PLAN
PIER 45EB

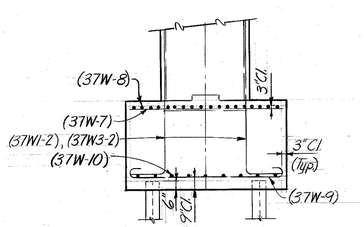

SECTION A-A

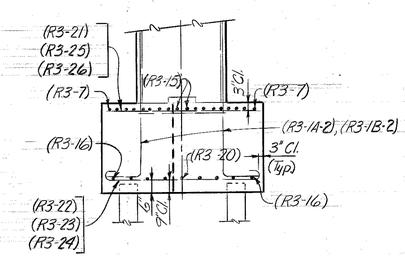

SECTION B-B

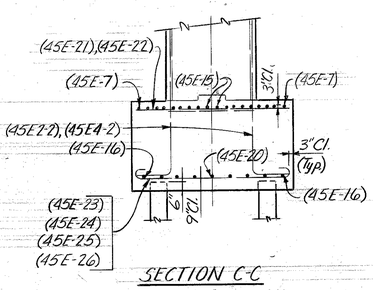

SECTION C-C

Notes:
(37W1-2), (37W3-2), (R3-1A-2), (R3-1B-2) (45E2-2), (45E4-2) dowel bars are to be placed with lower end radially out where possible.
For location of Dowels see Sheet A35
⊕ Indicates Piles Option A thru F.
⊥ Indicates 12 BP53 Piles.
See Pile Record Sheet for location of ℄ Columns.

SUBSTRUCTURE
STRAP FOOTING DETAILS

SHEET A33

COMMONWEALTH OF KENTUCKY
DEPARTMENT OF HIGHWAYS
FRANKFORT
COUNTY OF
JEFFERSON

I64-13TH ST. TO 7TH ST.
LOUISVILLE – LEXINGTON
ROAD SP 56-273-11L
STATION 208+08 **P. E. PROJECT NO.** I 64-2 (35) 3

CONSTRUCTION PROJECT NO.	MAINTENANCE PROJECT NO.	DRAWING NO.
		18572

DESIGNED BY CBF
DETAILED BY CBF
TRACED BY
CHECKED BY
CHECKED BY
CHECKED BY
DATE 4-71
DATE
DATE
DATE
REVISED
REVISED
REVISED
REVISED

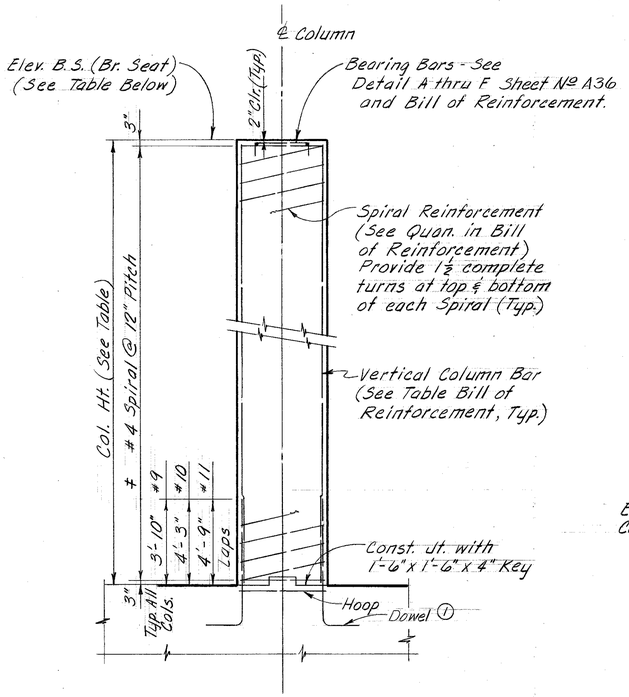

DETAIL "A"

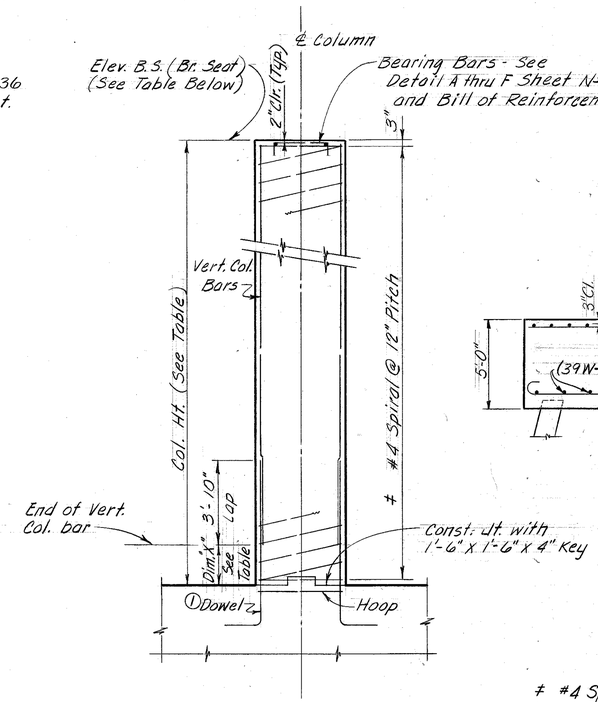

DETAIL "B"

≠ #4 Spiral equals size W20 wire.

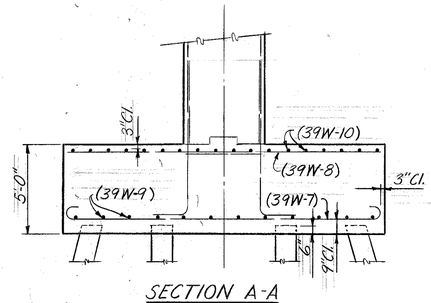

SECTION A-A
PIER 39WB

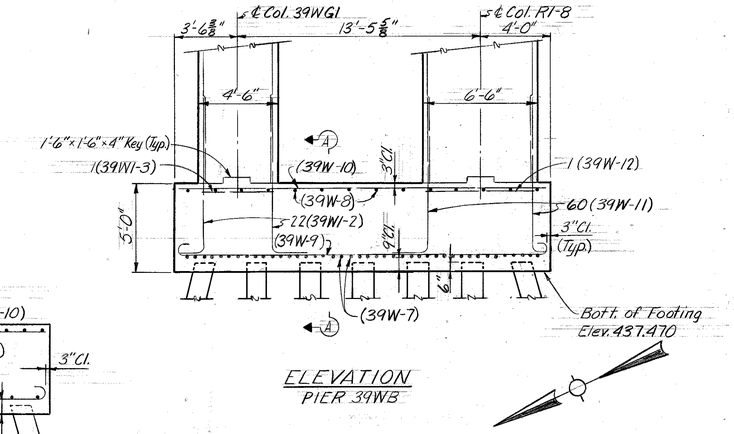

ELEVATION
PIER 39WB

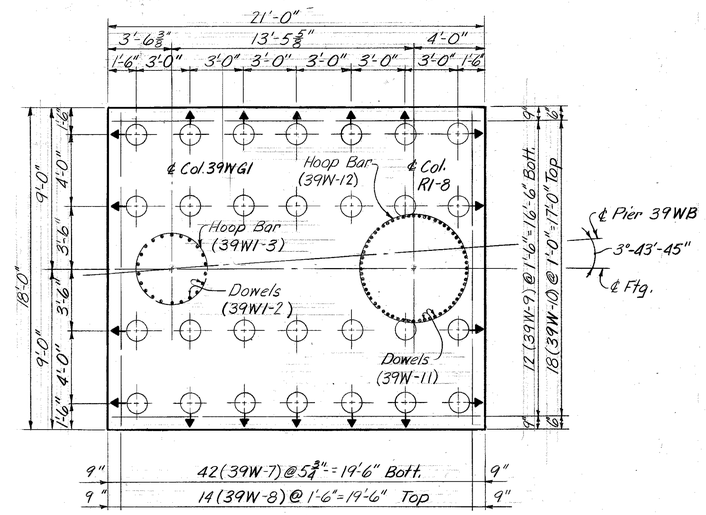

FOOTING PLAN
PIER 39WB

NOTE:
Columns 42W-G1 & 43W-G1 are on Floodwall Monoliths 102 & 98. See Sheet A35 for Dowel Details.

DIMENSION "X"	
Column	Dim.
29W-G1	2"
29W-G3	11"
30W-1	1'-8"
34E-G4	5"

Column	Elev. B.S.	Col. Ht.	Det.	Column	Elev. B.S.	Col. Ht.	Det.	Column	Elev. B.S.	Col. Ht.	Det.	Column	Elev. B.S.	Col. Ht.	Det.	Column	Elev. B.S.	Col. Ht.	Det.	Column	Elev. B.S.	Col. Ht.	Det.	Column	Elev. B.S.	Col. Ht.	Det.
26W-G1	476.974	30'-9"	A	30W-1	472.696	27'-6"	B	34W-G3	465.538	24'-9"	A	37E-G2	462.527	23'-6"	A	40E-G2	461.769	18'-6"	A	45E-G4	468.716	27'-3"	A	48E-4	469.907	29'-0"	A
26W-G3	476.184	30'-3"	↓	30W-G3	471.810	27'-3"	A	R1-17A	468.034	27'-0"	↕	37E-G4	463.526	26'-0"	↑	40E-G4	463.169	19'-9"	↑	45E-G6	471.726	28'-9"	↑	49W-1	465.831	25'-0"	↑
26E-G2	477.064	31'-0"		30E-G4	473.097	26'-0"	B	R1-17B	467.000	25'-6"	↓	37E-G6	463.112	27'-6"		41W-G3	462.146	22'-3"		45E-G8	472.493	29'-6"		49W-3	463.771	23'-3"	
26E-G4	477.773	31'-9"		31W-G3	470.735	26'-0"	A	34E-G2	467.303	26'-6"	A	38W-G1	460.935	19'-6"		42W-G1	464.181	*24'-3⅝±		46W-G1	467.634	26'-3		49W-5	462.597	23'-6"	
27W-G1	475.922	29'-9"		31E-2	471.183	25'-9"	↑	34E-G4	467.822	27'-3"	B	38W-G3	459.704	18'-3"		42W-G3	462.903	23'-0"		46W-G3	466.347	25'-0"		49E-2	466.120	25'-0"	
27W-G3	475.082	29'-3"		31E-G4	472.086	27'-0"		35W-G1	464.393	25'-3"	A	38E-G2	461.806	23'-6"		42E-G4	464.514	23'-3"		46E-2	467.330	25'-9"		49E-4	468.369	27'-9"	
27E-G2	475.890	29'-9"		32W-G1	469.418	25'-9"		35W-G3	463.919	23'-9"	↓	38E-G4	463.106	26'-6"		43W-G1	464.993	*24'-4⅜±		46E-4	468.930	27'-0"		50W-1	464.499	24'-6"	
27E-G4	476.600	30'-6"		32W-3	468.845	25'-0"		35E-G2	464.761	25'-6"		38E-G6	462.305	27'-3"		43W-G3	463.721	23'-6"		46E-6	470.248	27'-3"		50W-3	463.196	23'-9"	
28W-G1	474.927	29'-3"		32E-G2	470.166	25'-6"		35E-G4	465.449	26'-9"		39W-G1	461.220	18'-9"		43E-G4	465.316	24'-0"		47W-G1	467.567	26'-3"		50W-5	461.892	23'-0"	
28W-G3	474.039	28'-3"		32E-G4	470.643	26'-6"		36W-G1	462.641	23'-6"		39W-G3	459.959	18'-0"		44W-G1	467.098	26'-0"		47W-G3	466.259	25'-0"		50E-2	464.779	24'-0"	
28E-G2	475.092	28'-9"	↓	33W-G1	467.716	26'-3"		36W-G3	461.716	22'-0"		R3-1A	465.381	24'-3½"		44W-G3	465.810	25'-0"		47W-G5	469.305	29'-6"		50E-4	466.374	25'-3"	
28E-G4	475.786	28'-9"	A	33W-G3	467.258	25'-0"		36E-G2	463.803	25'-6"		R3-1B	464.342	23'-3"		44E-G2	465.042	24'-6"		47W-G7	468.582	29'-6"		51W-1	462.470	22'-3"	
29W-G1	473.869	27'-0"	B	33W-G5	466.946	24'-6"		36E-G4	464.545	26'-9"		39E-G2	461.811	20'-6"		44E-G4	466.441	26'-3"		47E-2	467.412	26'-3"		51W-3	461.701	22'-0"	
29W-G3	473.252	27'-9"	B	33E-G2	468.919	26'-6"		36E-G6	464.547	27'-6"		39E-G4	463.210	22'-0"		45W-G1	467.472	26'-3"		47E-4	469.045	27'-9"		51W-5	460.911	22'-0"	
29E-G2	474.048	26'-9"	A	33E-G4	469.366	27'-9"	↓	37W-G1	461.807	22'-9"	↓	40W-G1	462.326	21'-3"	↓	45W-G3	466.184	25'-0"	↓	47E-6	470.711	28'-3"	↓	51E-2	462.583	22'-3"	↓
29E-G4	474.531	27'-3"	A	34W-G1	465.973	26'-0"	A	37W-G3	460.535	21'-5¾"	A	40W-G3	461.096	20'-0"	A	45E-2	467.496	26'-0⅜"	A	48E-2	467.659	26'-9"	A	51E-4	463.552	22'-6"	A

* Floodwall Ftg. Elev. may vary to fit existing condition, thus Col. Ht. may vary

SUBSTRUCTURE
COLUMN DETAILS

For Columns not shown see Floodwall Monolith or Ramp Substructure Details.
① Turn radially outward where possible (Lower end to rest on top of bottom reinforcement in footing.)
For location of Footing 39WB see Pile Record Sheet

Work this Sheet with Sheets A32 thru A36.

SHEET A34

COMMONWEALTH OF KENTUCKY
DEPARTMENT OF HIGHWAYS
FRANKFORT
COUNTY OF
JEFFERSON
I64-13TH ST. TO 7TH ST.
LOUISVILLE—LEXINGTON ROAD
STATION 208+08
SP 56-273-IIL
P.E. PROJECT NO. I64-2(35)3

CONSTRUCTION PROJECT NO.	MAINTENANCE PROJECT NO.	DRAWING NO.
		18572

LETTITG DATE

DESIGNED BY E.L.U. 3-71 CHECKED BY RHC DATE 4-71
DETAILED BY CHECKED BY
TRACED BY CHECKED BY
REVISED DATE
REVISED DATE
REVISED DATE

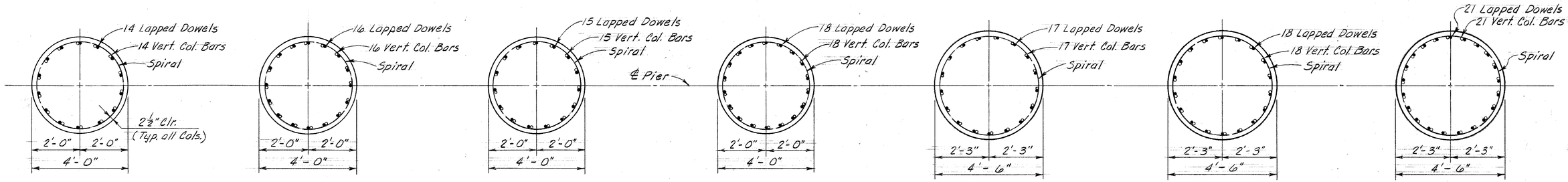

COLUMN SECTION
Column 40 W-G1

COLUMN SECTION
Columns 48 E-2 & 48 E-4

COLUMN SECTION
Columns 29 E-G2 & 29 E-G4

COLUMN SECTION
Columns 29 W-G1 & 29 W-G3

COLUMN SECTION
Columns 26 W-G1, 26 W-G3, 43 E-G4

COLUMN SECTION
Columns 35 E-G2 & 35 E-G4

COLUMN SECTION
Columns 27 E-G2, 27 E-G4, 30 W-G3 & 33 W-G1

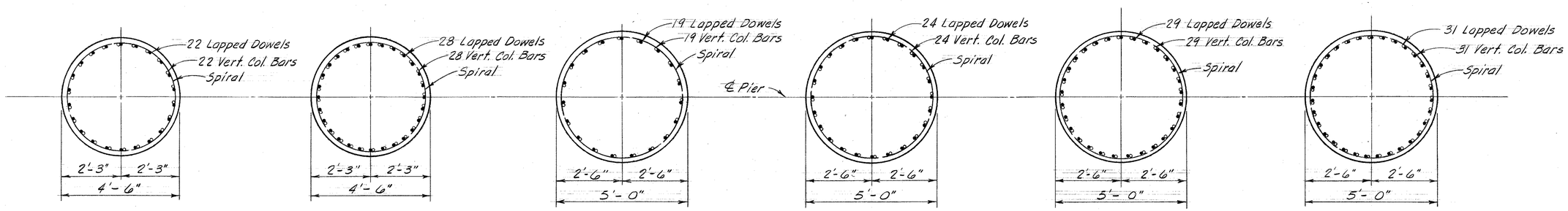

COLUMN SECTION
Column 39 W-G1

COLUMN SECTION
Column 30 E-G4

COLUMN SECTION
Columns 31 E-2 & 32 W-3

COLUMN SECTION
Column 34 E-G2

COLUMN SECTION
Column 34 E-G4

COLUMN SECTION
Column 30 W-1

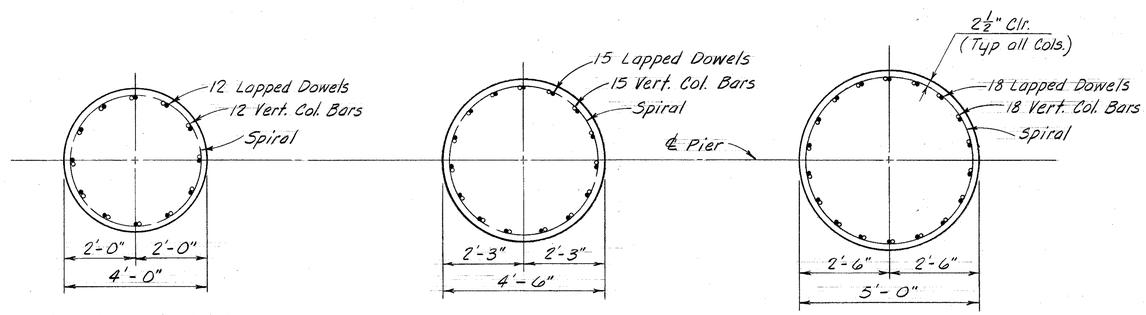

COLUMN SECTION

Columns		
32 E-G2	38 E-G4	46 W-G3
32 E-G4	38 E-G6	46 E-2
33 E-G2	40 W-G3	46 E-4
33 E-G4	40 E-G2	46 E-6
36 W-G1	40 E-G4	49 W-1
36 W-G3	41 W-G3	49 W-5
36 E-G2	42 E-G4	51 W-1
36 E-G4	43 W-G1	51 W-3
36 E-G6	43 W-G3	51 W-5
38 W-G1	44 W-G1	51 E-2
38 W-G3	44 W-G3	51 E-4
38 E-G2	46 W-G1	

COLUMN SECTION

Columns		
26 E-G2	33 W-G3	44 E-G4
26 E-G4	33 W-G5	45 W-G1
27 W-G1	35 W-G1	45 W-G3
27 W-G3	35 W-G3	47 E-2
28 W-G1	37 E-G2	47 E-4
28 W-G3	37 E-G4	47 E-6
28 E-G2	37 E-G6	49 E-2
28 E-G4	39 W-G3	49 E-4
31 W-G3	42 W-G1	50 W-1
31 E-G4	42 W-G3	50 W-3
32 W-G1	44 E-G2	50 W-5

COLUMN SECTION

Columns	
34 W-G1	45 E-G4
34 W-G3	45 E-G6
R1-17A	45 E-G8
R1-17B	47 W-G1
37 W-G1	47 W-G3
37 W-G3	47 W-G5
R3-1A	47 W-G7
R3-1B	49 W-3
39 E-G2	50 E-2
39 E-G4	50 E-4
45 E-2	

NOTES:

Column Sections are cut just above top of Footing to show vertical column bars and footing dowels.

Column Designation - Prefix denotes pier no., Suffix denotes column no. (29 W-G1 is Col. G1 in pier 29 westbound, or 31 E-2 is Col. 2 in pier 31 eastbound) The "G" in the suffix indicates the column is under a longitudinal girder.

Work this sheet with Sheets A32 thru A36

SHEET A35

SUBSTRUCTURE
COLUMN SECTIONS

COMMONWEALTH OF KENTUCKY
DEPARTMENT OF HIGHWAYS
FRANKFORT
COUNTY OF
JEFFERSON

I 64-13TH ST. TO 7TH ST.
LOUISVILLE — LEXINGTON ROAD

STATION 208+08 | P.E. PROJECT NO. I 64-2 (35) 3 | SP 56-273-11L

CONSTRUCTION PROJECT NO.	MAINTENANCE PROJECT NO.	DRAWING NO.
		18572

LETTING DATE

DESIGNED BY E.L.U. DATE 3-71 CHECKED BY RHC DATE 4-71
DETAILED BY DATE CHECKED BY DATE
TRACED BY DATE CHECKED BY DATE
REVISED REVISED REVISED

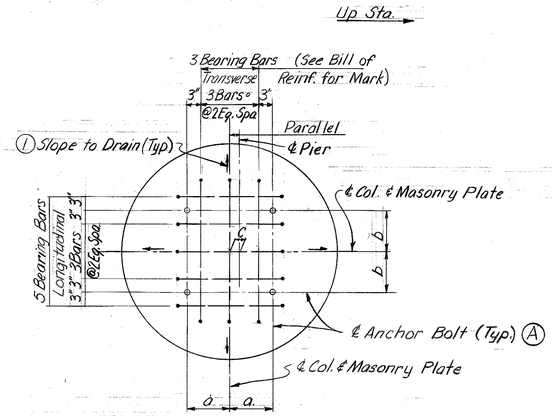

DETAIL "A"

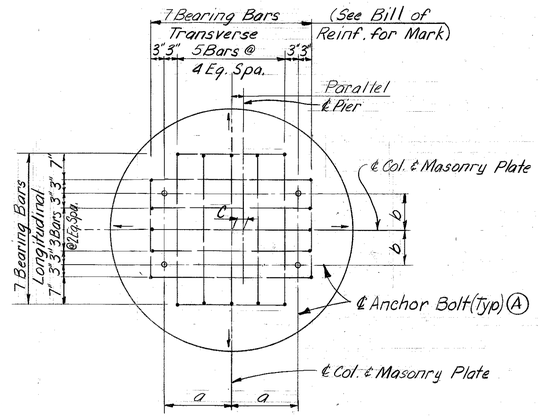

DETAIL "B"

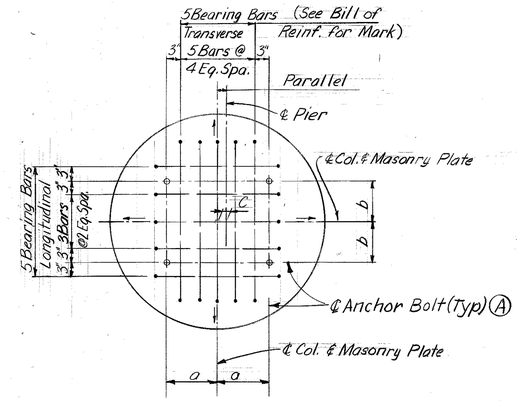

DETAIL "C"

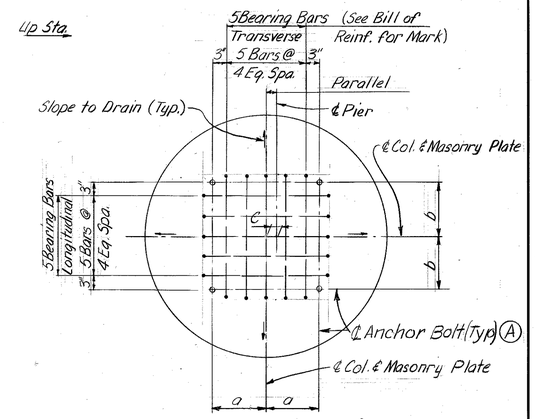

DETAIL "D"

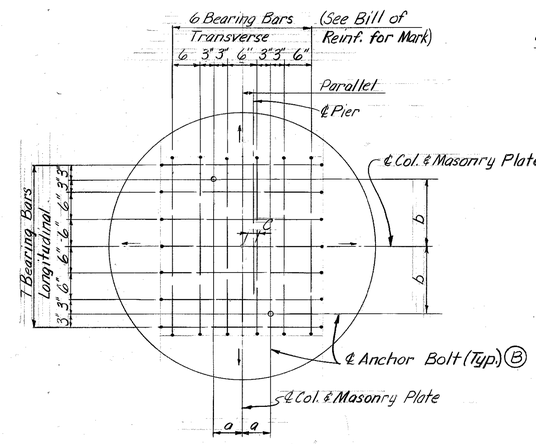

DETAIL "E"

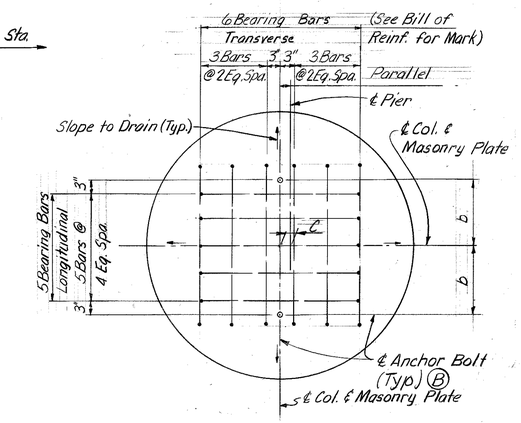

DETAIL "F"

Column	Det.	a	b	Nº Trans. Bars	Nº Long. Bars
26W-G1	A	10½"	9"	3	5
26W-G3	A	10½"	9"	3	5
26E-G2	A	10½"	9"	3	5
26E-G4	A	10½"	9"	3	5
27W-G1	D	1'-0"	1'-0"	5	5
27W-G3	D	1'-0"	1'-0"	5	5
27E-G2	D	1'-0"	1'-0"	5	5
27E-G4	D	1'-0"	1'-0"	5	5
28W-G1	A	10½"	9"	3	5
28W-G3	A	10½"	9"	3	5
28E-G2	A	9½"	9"	3	5
28E-G4	A	9½"	9"	3	5
29W-G1	C	11½"	9"	5	5
29W-G3	C	1'-0½"	9"	5	5
29E-G2	C	11½"	9"	5	5
29E-G4	A	10½"	9"	3	5
30W-1	D	1'-4"	1'-4"	5	5
30W-G3	D	1'-1"	1'-1"	5	5
30E-G4	D	1'-2"	1'-2"	5	5
31W-G3	C	11½"	9"	5	5
31E-2	C	1'-1½"	9"	5	5
31E-G4	A	9½"	9"	3	5
32W-G1	C	1'-1½"	9"	5	5
32W-3	B	1'-6"	8"	5	5
				2	2
32E-G2	C	11½"	9"	5	5
32E-G4	A	10½"	9"	3	5
33W-G1	D	1'-1"	1'-1"	5	5
33W-G3	D	1'-0"	1'-0"	5	5
33W-G5	D	1'-1"	1'-1"	5	5
33E-G2	A	10½"	9"	3	5
33E-G4	A	10½"	9"	3	5
34W-G1	F	–	1'-2½"	6	5
34W-G3	F	–	1'-2½"	6	5
R1-17A	F	–	1'-1½"	6	5
R1-17B	F	–	1'-3½"	6	5
34E-G2	D	1'-3"	1'-3"	5	5
34E-G4	D	1'-3"	1'-3"	5	5
35W-G1	D	1'-0"	1'-0"	5	5
35W-G3	D	1'-0"	1'-0"	5	5
35E-G2	B	1'-3"	7"	5	5
				2	2
35E-G4	B	1'-3"	7"	5	5
				2	2

Column	Det.	a	b	Nº Trans. Bars	Nº Long. Bars
36W-G1	A	10½"	9"	3	5
36W-G3	A	10½"	9"	3	5
36E-G2	A	10½"	9	3	5
36E-G4	A	9½"	9"	3	5
36E-G6	A	10½"	9"	3	5
37W-G1	F	–	1'-0½"	6	5
37W-G3	F	–	1'-0½"	6	5
37E-G2	D	1'-0"	1'-0"	5	5
37E-G4	D	1'-0"	1'-0"	5	5
37E-G6	D	1'-1"	1'-1"	5	5
38W-G1	C	1'-0½"	9"	5	5
38W-G3	C	11½"	9"	5	5
38E-G2	A	10½"	9"	3	5
38E-G4	A	10½"	9"	3	5
38E-G6	A	10½"	9"	3	5
39W-G1	D	1'-2"	1'-2"	5	5
39W-G3	D	1'-2"	1'-2"	5	5
R3-1A	F	–	1'-0½"	6	5
R3-1B	F	–	1'-1½"	6	5
39E-G2	E	6"	1'-3"	6	7
39E-G4	E	6"	1'-3"	6	7
40W-G1	C	1'-0½"	9"	5	5
40W-G3	C	11½"	9"	5	5
40E-G2	A	9½"	9"	3	5
40E-G4	A	9½"	9"	3	5
41W-G3	A	10½"	9"	3	5
42W-G1	D	1'-0"	1'-0"	5	5
42W-G3	D	1'-0"	1'-0"	5	5
42E-G4	A	9½"	9"	3	5
43W-G1	A	9½"	9"	3	5
43W-G3	A	9½"	9"	3	5
43E-G4	D	1'-1"	1'-1"	5	5
44W-G1	A	9½"	9"	3	5
44W-G3	A	9½"	9"	3	5
44E-G2	C	11½"	9"	5	5
44E-G4	C	11½"	9"	5	5
45W-G1	D	1'-0"	1'-0"	5	5
45W-G3	D	1'-0"	1'-0"	5	5
45E-2	F	–	1'-2½"	6	5
45E-G4	F	–	1'-2½"	6	5
45E-G6	F	–	1'-2½"	6	5
45E-G8	F	–	1'-2½"	6	5
46W-G1	A	9½"	9"	3	5

Column	Det.	a	b	Nº Trans. Bars	Nº Long. Bars
46W-G3	A	9½"	9"	3	5
46E-2	C	11½"	9"	5	5
46E-4	C	11½"	9"	5	5
46E-6	C	11½"	9"	5	5
47W-G1	F	–	1'-2½"	6	5
47W-G3	F	–	1'-2½"	6	5
47W-G5	F	–	1'-3½"	6	5
47W-G7	F	–	1'-2½"	6	5
47E-2	D	1'-0"	1'-0"	5	5
47E-4	D	1'-1"	1'-1"	5	5
47E-6	D	1'-0"	1'-0"	5	5
48E-2	C	11½"	9"	5	5
48E-4	C	11½"	9"	5	5
49W-1	C	11½"	9"	5	5
49W-3	C	1'-1½"	9"	5	5
49W-5	C	11½"	9"	5	5
49E-2	C	1'-0½"	9"	5	5
49E-4	C	1'-0½"	9"	5	5
50W-1	D	1'-0"	1'-0"	5	5
50W-3	D	1'-0"	1'-0"	5	5
50W-5	D	1'-0"	1'-0"	5	5
50E-2	D	1'-1"	1'-1"	5	5
50E-4	D	1'-1"	1'-1"	5	5
51W-1	C	11½"	9"	5	5
51W-3	C	11½"	9"	5	5
51W-5	C	11½"	9"	5	5
51E-2	C	11½"	9"	5	5
51E-4	C	11½"	9"	5	5

Notes:

For dim. "C" See Sheet A32

Work this Sheet with Sheets A32 thru A35

① Slope shall begin ½"± outside edge of Masonry Plate.

Ⓐ 1¾"Φ hole 12" deep for 1¼"Φ x 1'-6" long Anchor Bolt.

Ⓑ 2"Φ hole 15" deep for 1½"Φ x 1'-9" long Anchor Bolt.

SHEET A36

SUBSTRUCTURE
MASONRY PLATE BEARING BAR & ANCHOR BOLT SETTING DETAILS

COMMONWEALTH OF KENTUCKY
DEPARTMENT OF HIGHWAYS
FRANKFORT
COUNTY OF
JEFFERSON

I 64-13TH ST. TO 7TH ST.
LOUISVILLE—LEXINGTON ROAD

SP 56-273-11L

STATION 208+08 **P. E. PROJECT NO.** I 64-2 (35) 3

CONSTRUCTION PROJECT NO.	MAINTENANCE PROJECT NO.	DRAWING NO.
		18572

LETTITG DATE

DATE DATE DATE

REVISED REVISED REVISED

DESIGNED BY CHECKED BY DATE
DETAILED BY LBF CHECKED BY RHC DATE 4-71
TRACED BY CHECKED BY DATE

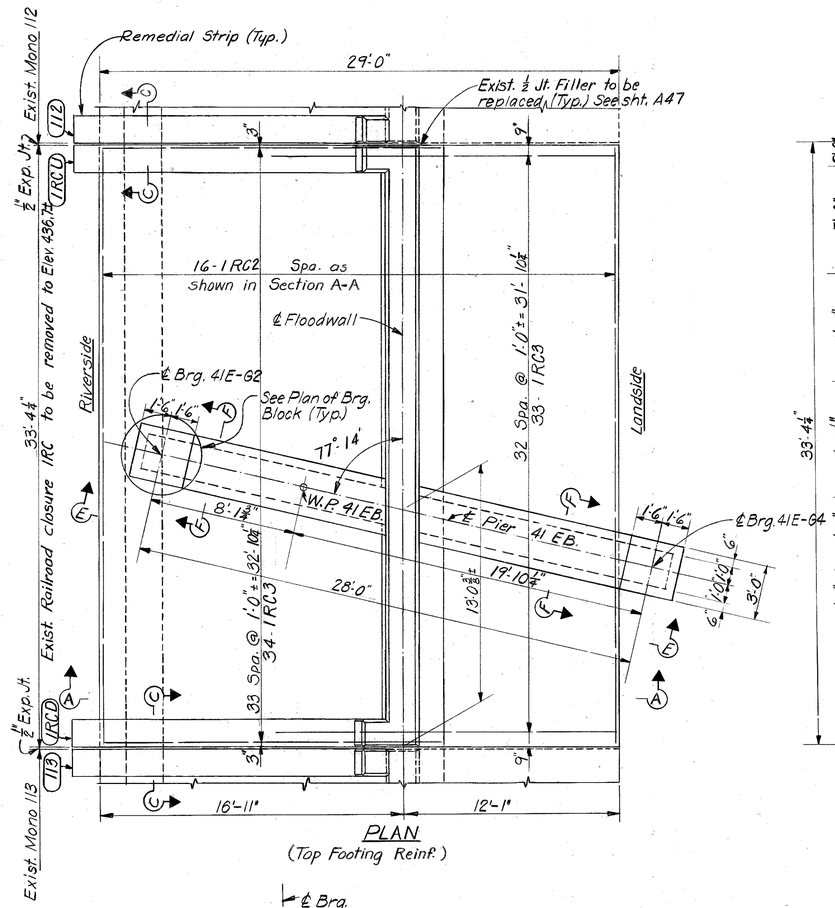

PLAN
(Top Footing Reinf.)

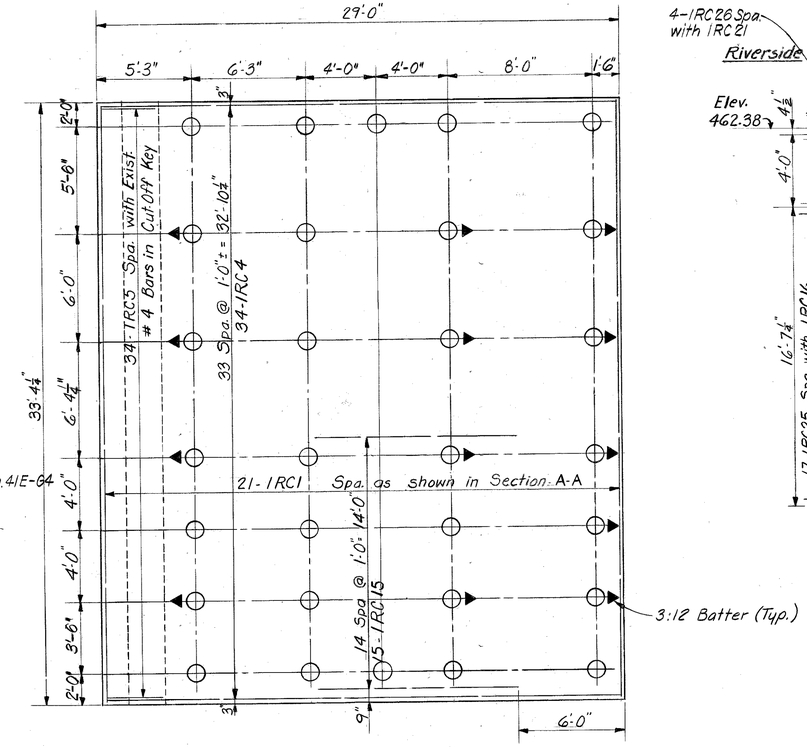

PLAN
(Bottom Footing Reinf.)

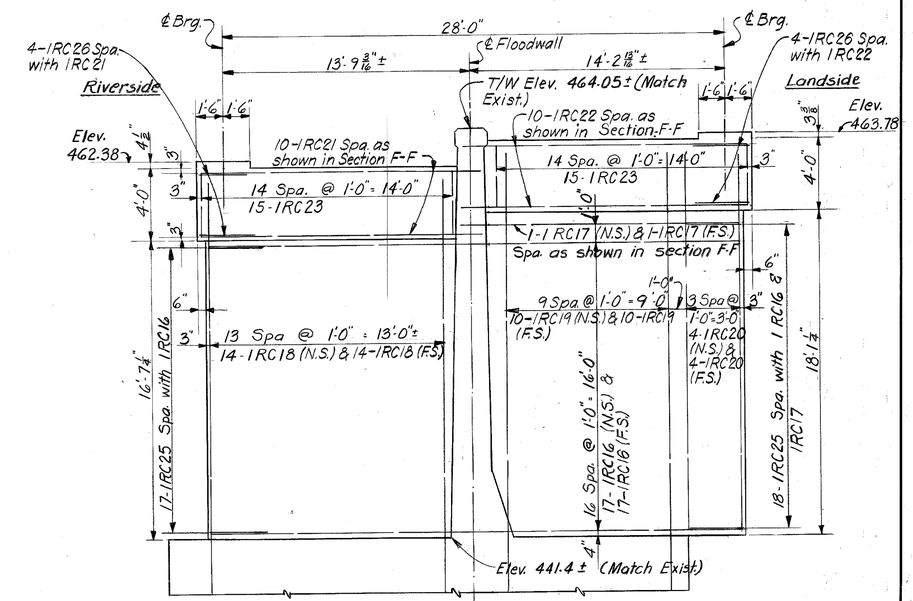

SECTION- E-E

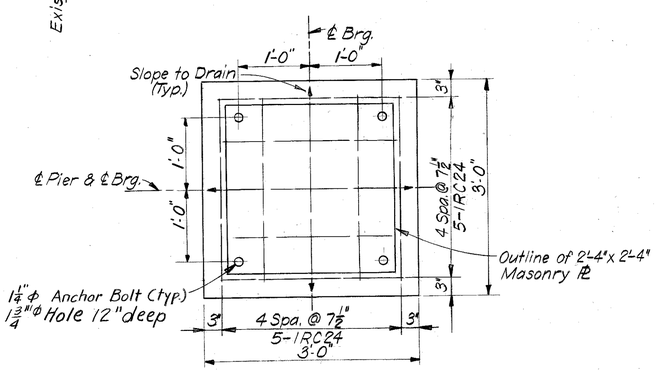

PLAN OF BEARING BLOCK
(Typical)

NOTES FOR FLOODWALL MONOLITHS

1. R.S. Denotes Riverside.
2. L.S. Denotes Landside.
3. The clear distance from the face of concrete to the first layer of reinforcing is 2½" unless otherwise noted.
4. Care shall be exercised in removing existing footing, to prevent damage to the projection of existing reinforcement in Cut-Off Key.
5. Existing reinforcement to be cleaned by sandblasting before pouring replacement footing. (Incidental to Class "A" Concrete)
6. Floodwall reconstruction shall be commenced no earlier than May 1 and completed no later than December 31 of the same Year.
7. Existing concrete dimensions and reinforcement shown for information only.
8. Monolith numbers, dimensions and elevations shown are based on "As-Built" Plans for Louisville Flood Protection, section B, by U.S. Engineer office, Louisville Ky.
9. Floodwall cope and remedial strips at top of floodwall are to be chamfered 2". All other exposed corners shall have the standard ⅞" chamfer.
10. For details of Remedial Strips and for Sections B-B, C-C & D-D see sheet A44
11. For Miscellaneous Details see sheet A47
12. Vertical Reinforcement in Floodwalls, Pier Walls and Column Bases shall be embedded in the footing to the elevation of the bottom footing reinforcement.
13. For Section A-A & F-F See Sh. A38.
14. Where excavation occurs adjacent to Floodwall the excavated soil shall be replaced and compacted to its original state.

SUBSTRUCTURE
RAILROAD CLOSURE 1RC, PIER 41E (G2 & G4)

SHEET A37

COMMONWEALTH OF KENTUCKY
DEPARTMENT OF HIGHWAYS
FRANKFORT
COUNTY OF
JEFFERSON

I64-13TH ST. TO 7TH ST.
LOUISVILLE—LEXINGTON ROAD

STATION 208+08 | P.E. PROJECT NO. I64-2(35)3 | SP 56-273-11L

CONSTRUCTION PROJECT NO.	MAINTENANCE PROJECT NO.	DRAWING NO.
		18572

LETTITG DATE

DESIGNED BY	RBS	CHECKED BY	PME
DETAILED BY	BMD	CHECKED BY	EB
TRACED BY		CHECKED BY	

REVISED DATE 3-71
REVISED DATE 4-71
REVISED DATE
REVISED DATE

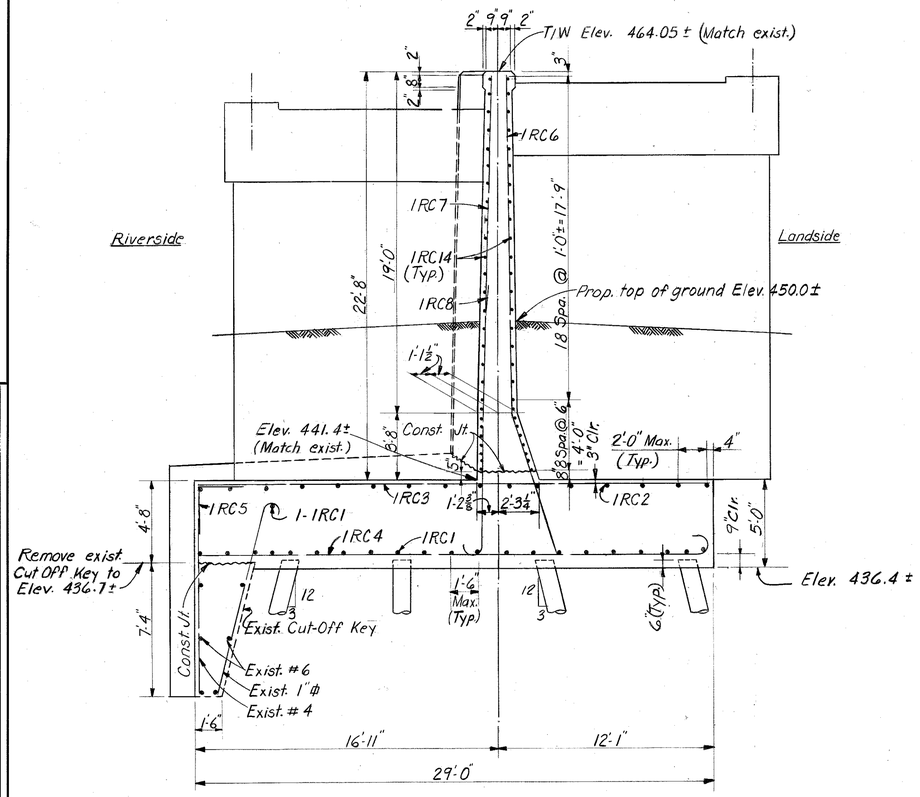

SECTION-A-A

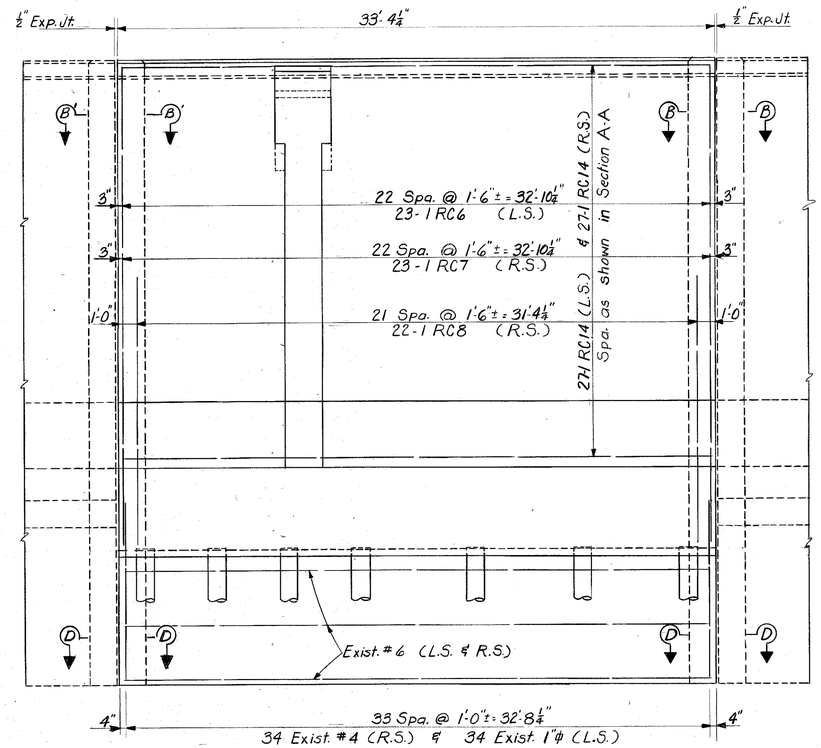

LANDSIDE ELEVATION

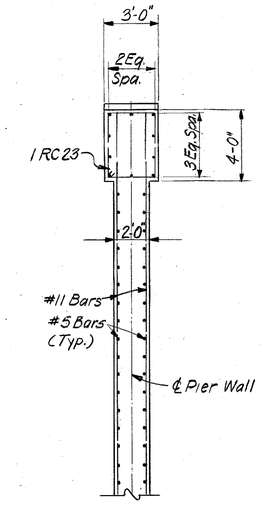

SECTION-F-F

NOTE:
For Floodwall Monolith Notes See Sht. A37

SHEET A38

SUBSTRUCTURE
RAILROAD CLOSURE 1RC, PIER 41E (G2 & G4)

COMMONWEALTH OF KENTUCKY
DEPARTMENT OF HIGHWAYS
FRANKFORT
COUNTY OF
JEFFERSON
I64-13TH ST. TO 7TH ST.
LOUISVILLE-LEXINGTON ROAD
SP 56-273-11L
STATION 208+08 P. E. PROJECT NO. I 64-2(35)3

CONSTRUCTION PROJECT NO.	MAINTENANCE PROJECT NO.	DRAWING NO.
		18572

LETTITG DATE

DESIGNED BY RBS CHECKED BY PME DATE 3-71 REVISED
DETAILED BY BMD CHECKED BY EB DATE 4-71 REVISED
TRACED BY CHECKED BY DATE REVISED

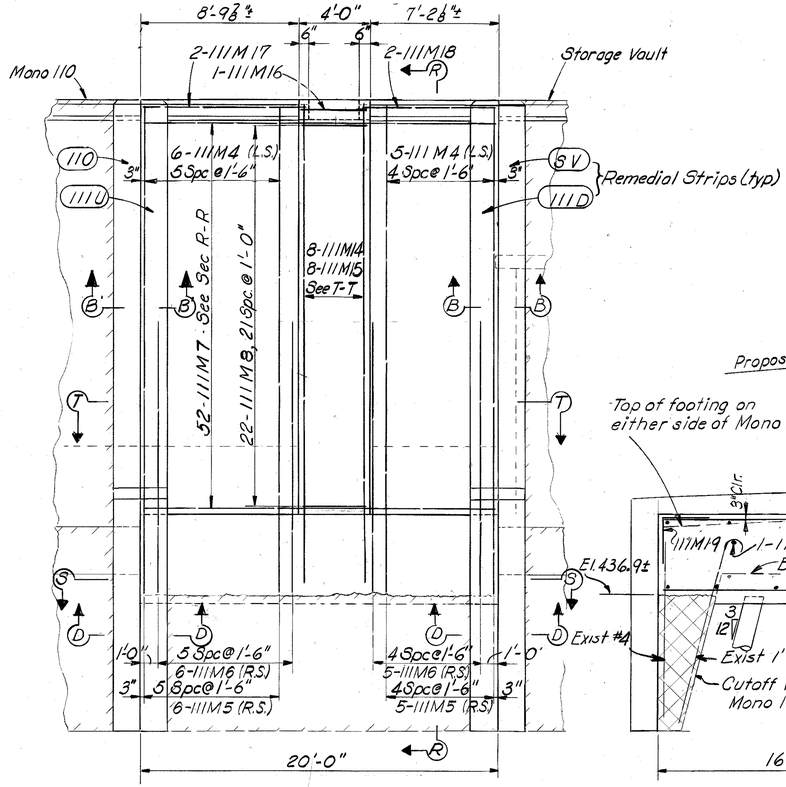

ELEVATION - RIVERSIDE

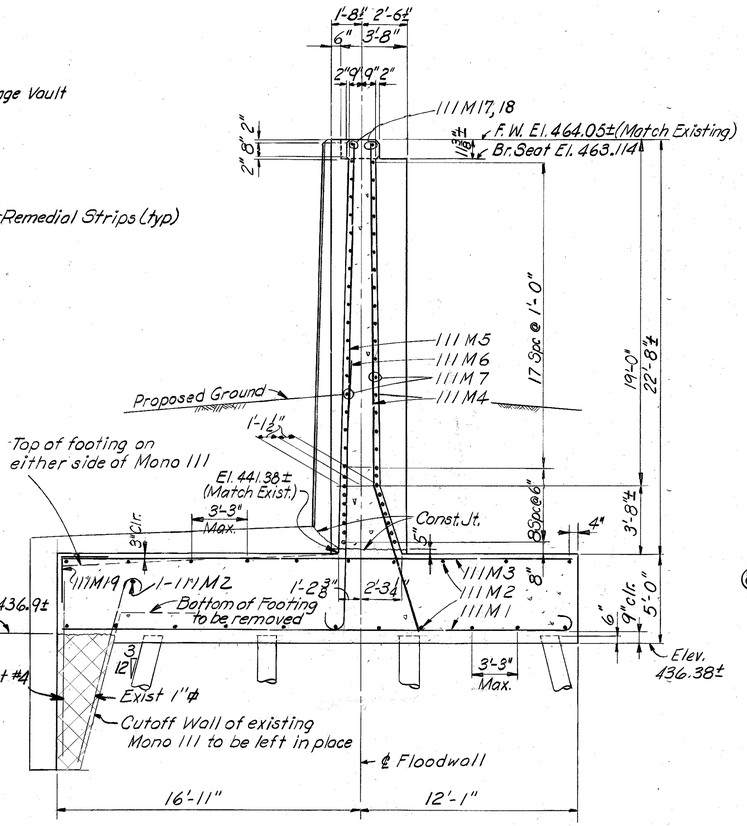

SECTION R-R

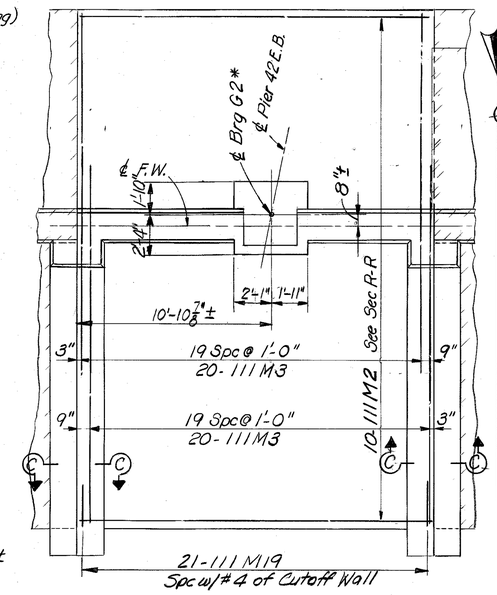

PLAN

*℄ Brg. G2 to be located relative to the Work Point as shown on Pile Record Sheets

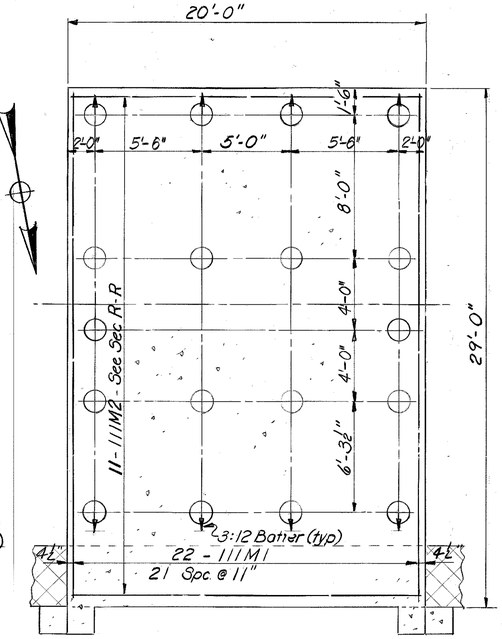

SECTION S-S

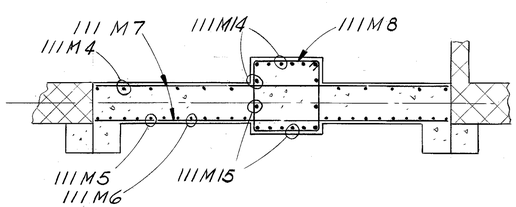

SECTION T-T

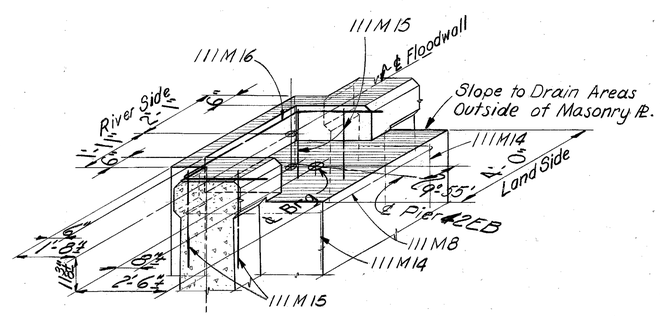

BRIDGE SEAT DETAIL

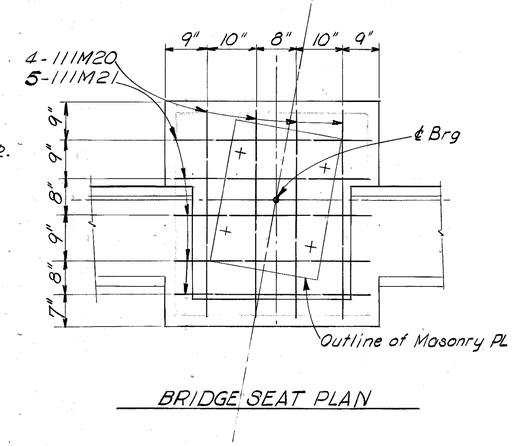

BRIDGE SEAT PLAN

NOTE
See Sheet A37 for "Notes For Floodwall Monoliths."

SHEET A39

COMMONWEALTH OF KENTUCKY
DEPARTMENT OF HIGHWAYS
FRANKFORT
COUNTY OF
JEFFERSON

I 64-13TH ST. TO 7TH ST.
LOUISVILLE — LEXINGTON ROAD

SP 56-273-11L

STATION 208+08 **P. E. PROJECT NO.** I 64-2 (35) 3

CONSTRUCTION PROJECT NO.	MAINTENANCE PROJECT NO.	DRAWING NO.
		18572

SUBSTRUCTURE
MONO 111, PIER 42E(G2)

LETTITG DATE

DESIGNED BY RBS CHECKED BY PME DATE 4-71 REVISED
DETAILED BY RBS CHECKED BY PME DATE 4-71 REVISED
TRACED BY CHECKED BY DATE REVISED

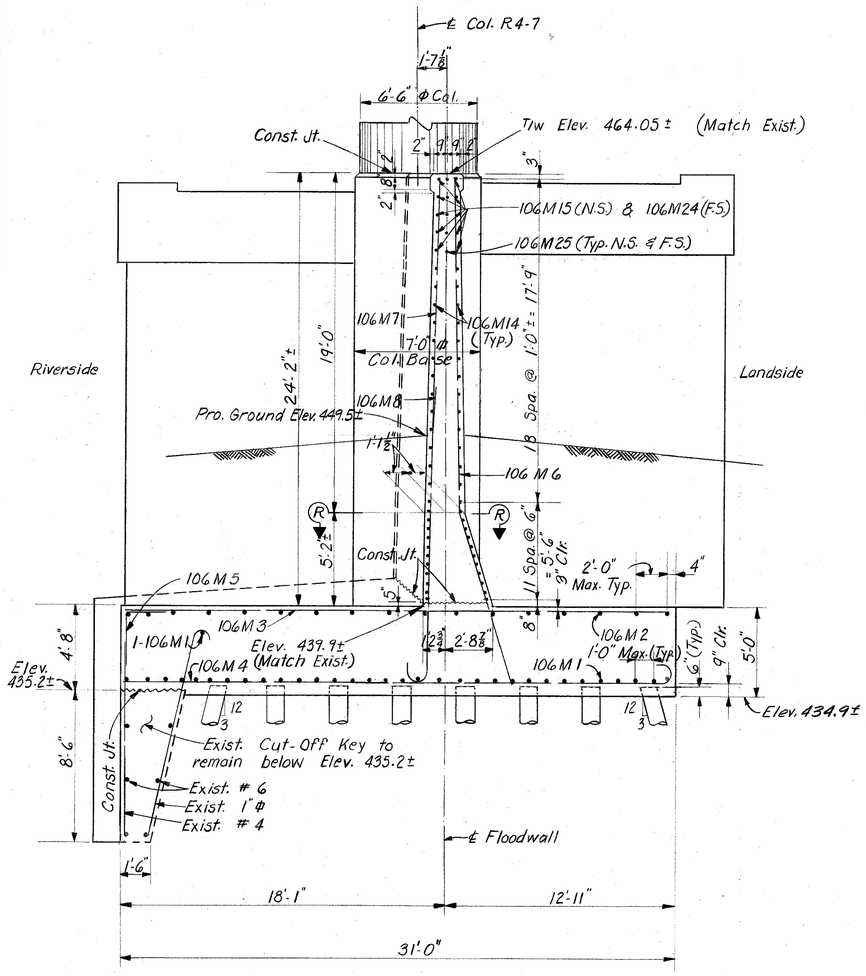

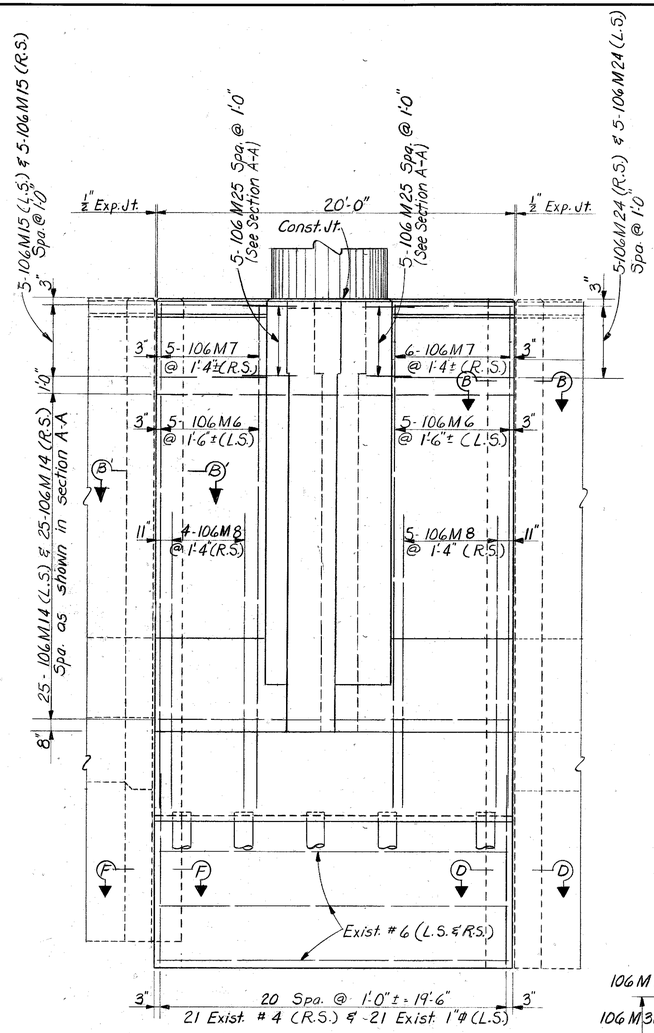

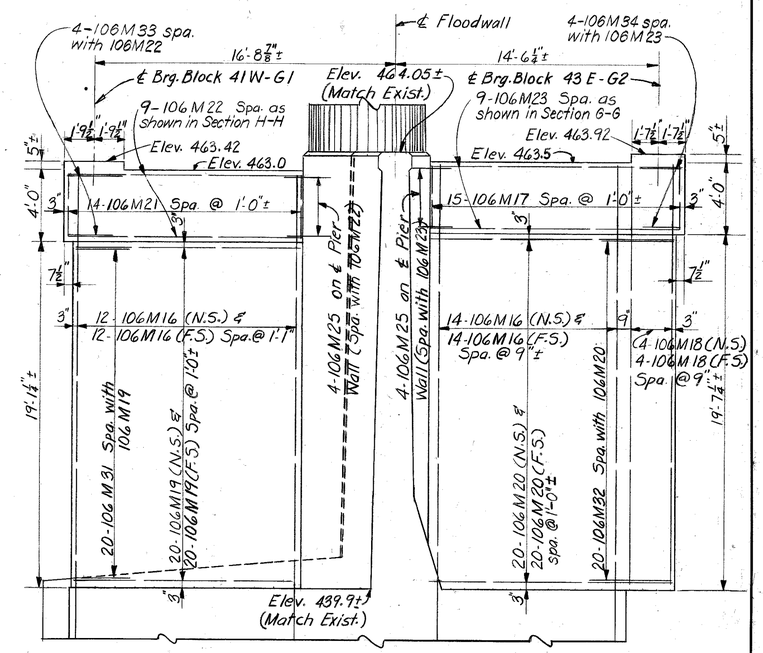

SECTION A-A
(Pier Wall Detail)

LANDSIDE ELEVATION

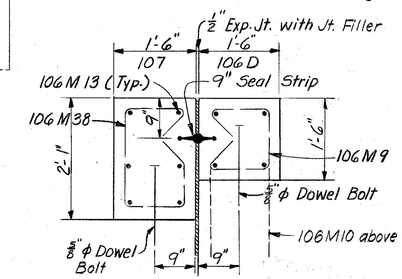

SECTION F-F

NOTES FOR MONO 106

1. For notes see sht. A37
2. For Details of Column R4-7 above Elev. 464.05 see sht. C26
3. Reinforcing Bars in Bearing Blocks to be placed exactly as shown so as not to interfere with drilling of Anchor Bolt Holes

For Plan and location of Section A-A see Sheet A41.

SECTION A-A
(Floodwall & Footing Detail)

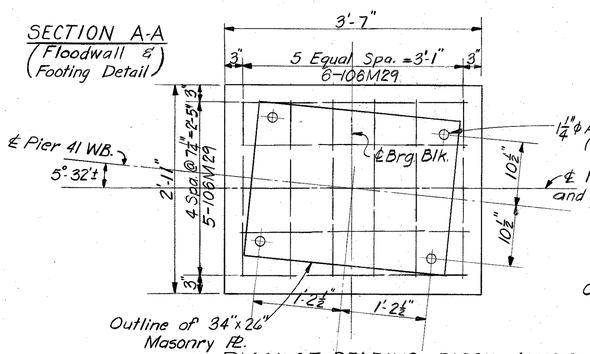

PLAN OF BEARING BLOCK 41 W-G1

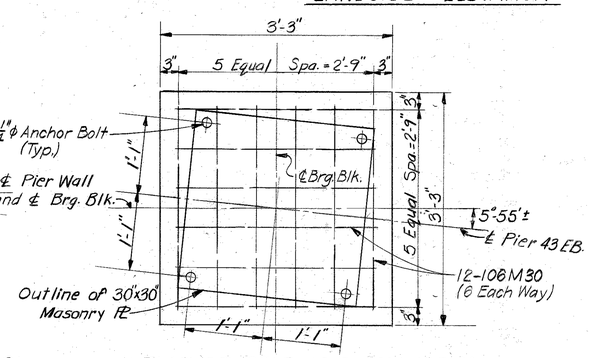

PLAN OF BEARING BLOCK 43 E-G2

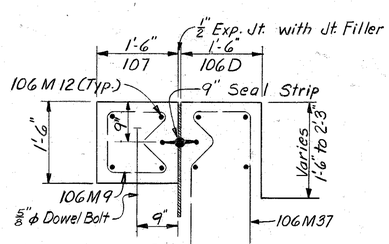

SECTION E-E

SHEET A40

COMMONWEALTH OF KENTUCKY
DEPARTMENT OF HIGHWAYS
FRANKFORT
COUNTY OF
JEFFERSON

I64-13TH ST. TO 7TH ST.
LOUISVILLE — LEXINGTON ROAD

STATION 208+08 — P.E. PROJECT NO. I 64-2 (35) 3 — SP 56-273-11L

CONSTRUCTION PROJECT NO.	MAINTENANCE PROJECT NO.	DRAWING NO.
		18572

SUBSTRUCTURE—MONO 106—PIERS 41W(G1), 43E(G2) & R4-7

LETTITIG DATE

DESIGNED BY RBS — CHECKED BY PME — DATE 3-71 — REVISED
DETAILED BY BMD — CHECKED BY PME — DATE 4-71 — REVISED
TRACED BY — CHECKED BY — DATE — REVISED

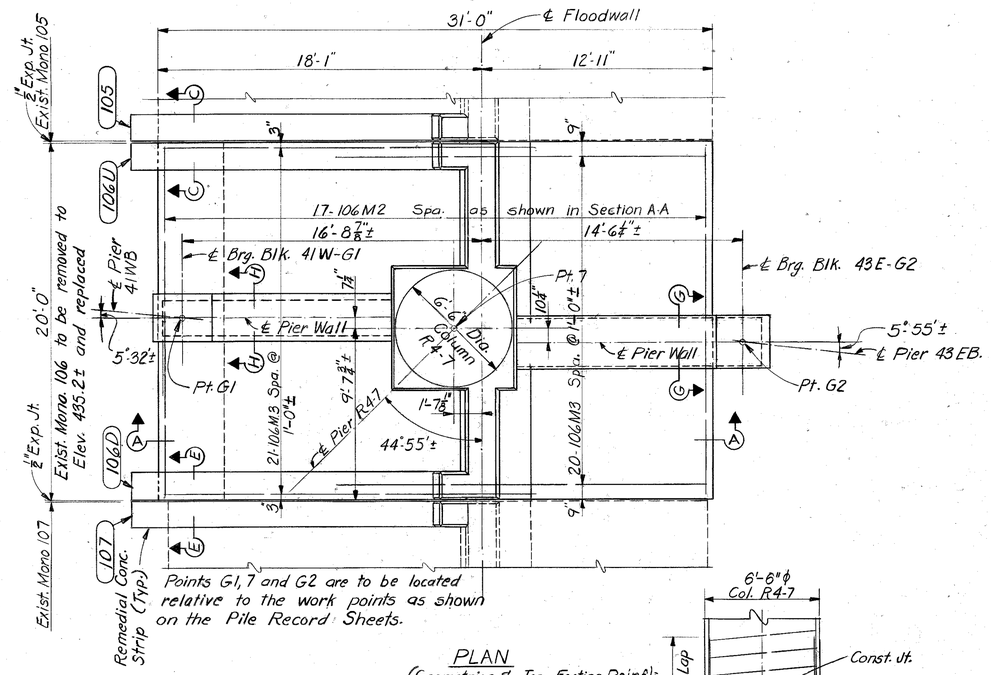

PLAN
(Geometrics & Top Footing Reinf.)

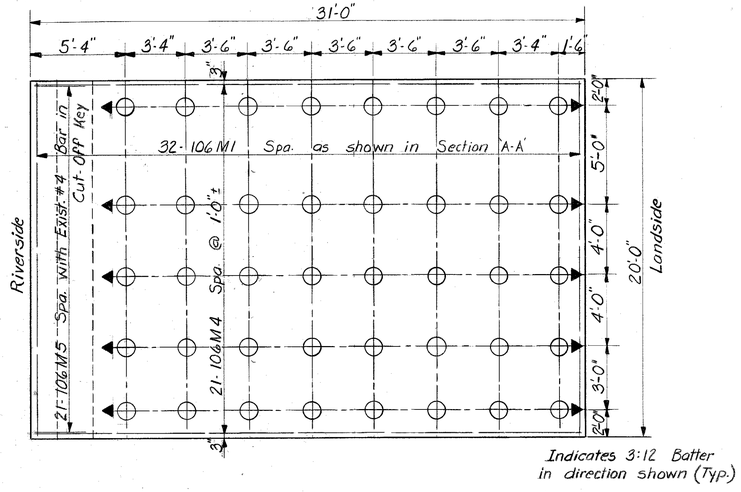

PLAN
(Bottom Footing Reinf. and Pile Pattern.)

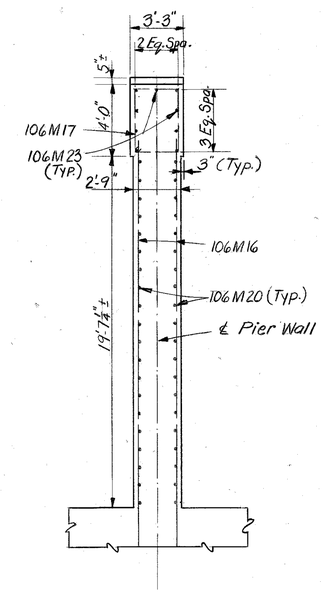

SECTION G-G

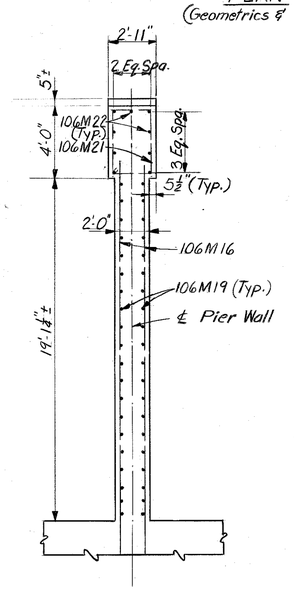

SECTION H-H

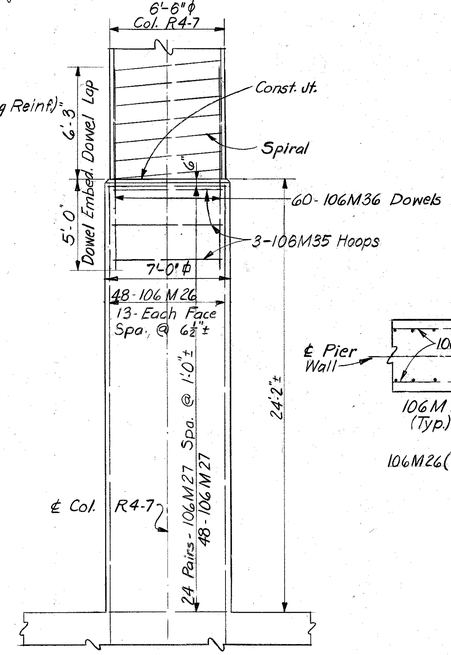

COLUMN BASE ELEVATION
(Walls not shown)

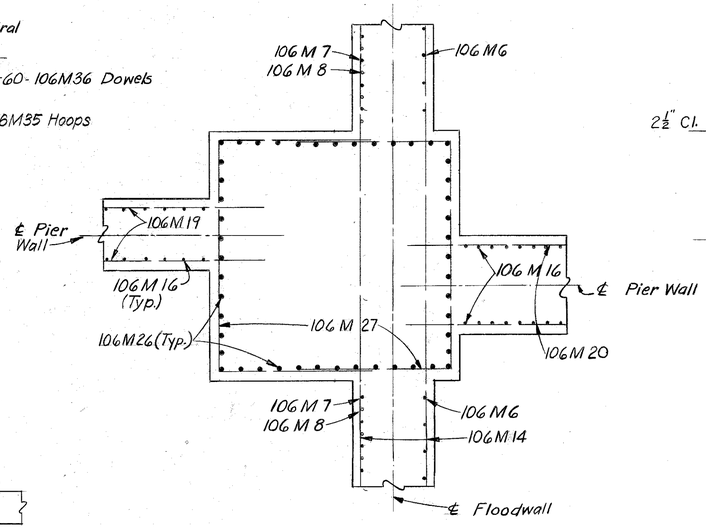

SECTION R-R

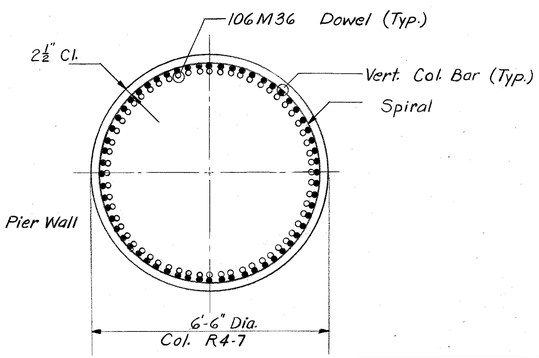

COLUMN SECTION

SHEET A41

COMMONWEALTH OF KENTUCKY
DEPARTMENT OF HIGHWAYS
FRANKFORT
COUNTY OF
JEFFERSON

I64-13TH ST. TO 7TH ST.
LOUISVILLE—LEXINGTON ROAD

SP 56-273-11L

STATION 208+08 **P. E. PROJECT NO.** I 64-2 (35) 3

CONSTRUCTION PROJECT NO.	MAINTENANCE PROJECT NO.	DRAWING NO.
		18572

SUBSTRUCTURE-MONO 106-PIERS 41W(G1), 43E(G2) & R4-7

LETTITG DATE

DESIGNED BY RBS	CHECKED BY PME	DATE 3-71	REVISED
DETAILED BY BMD	CHECKED BY PME	DATE 4-71	REVISED
TRACED BY	CHECKED BY	DATE	REVISED

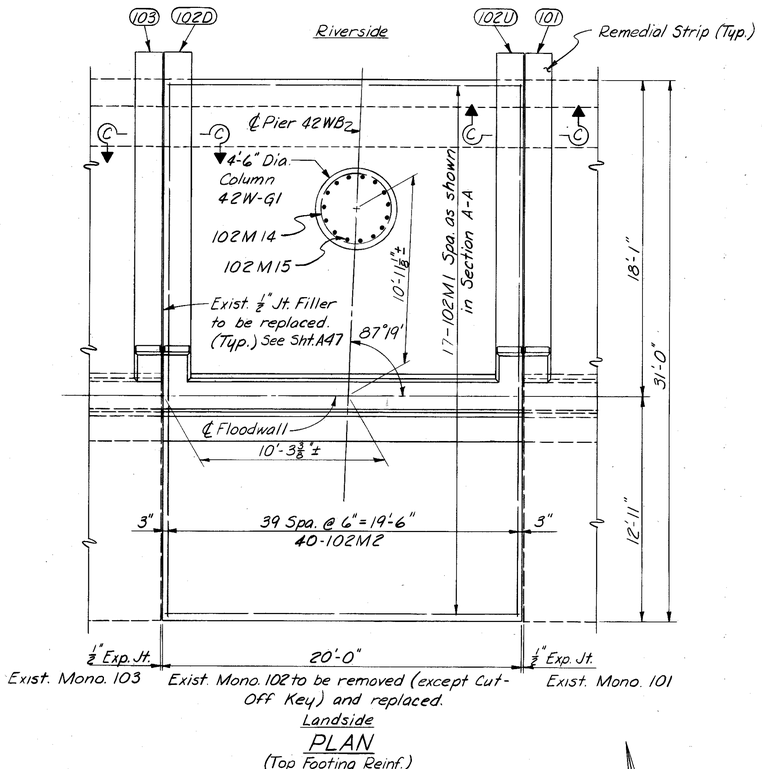

Landside

PLAN

(Top Footing Reinf.)

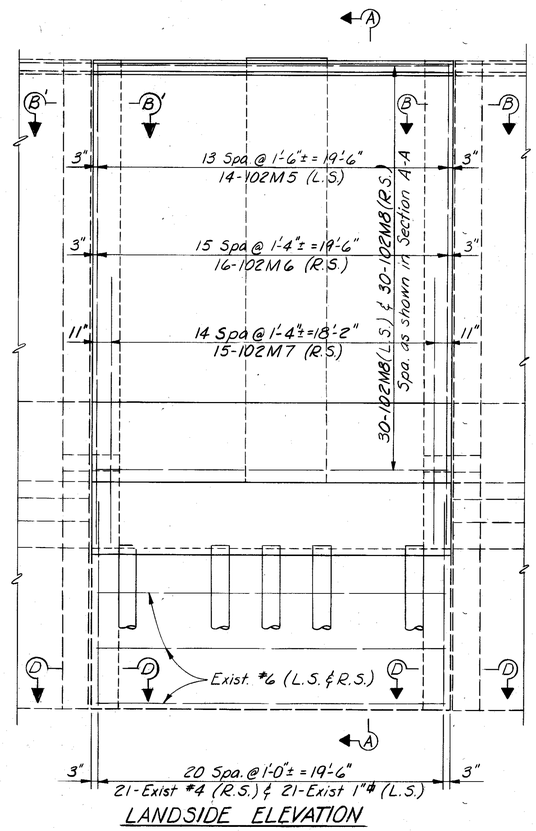

LANDSIDE ELEVATION

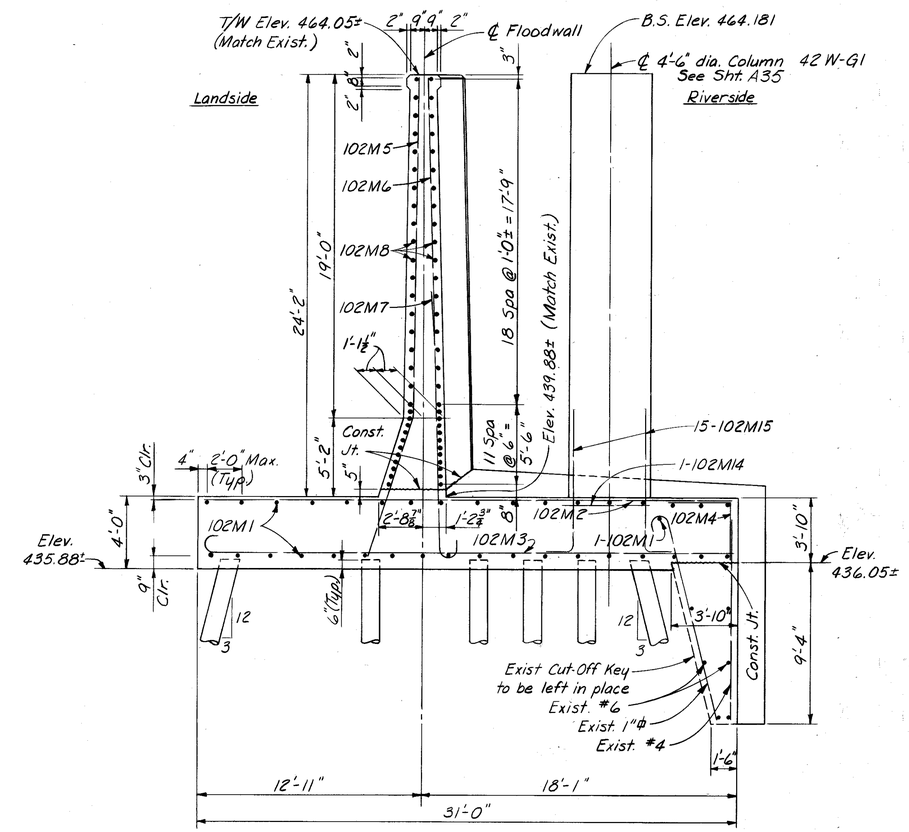

SECTION A-A

NOTE:

For Floodwall Monolith Notes See Sht. A37
Column to be located relative to Work Point.
See Pile Record Sheet.

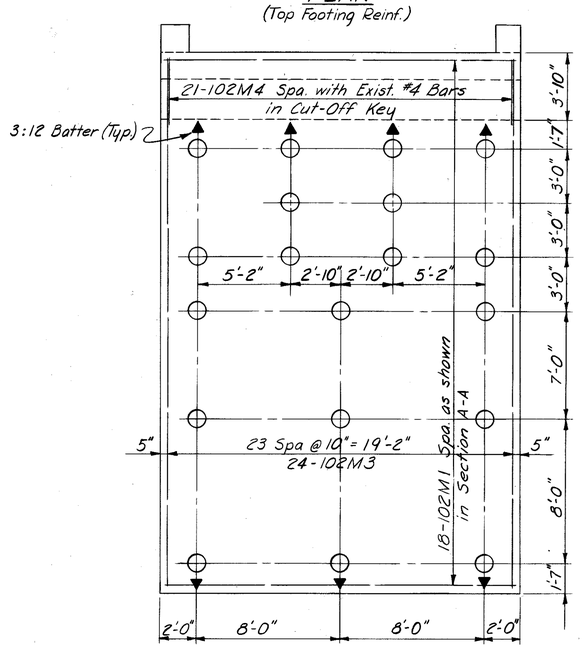

PLAN

(Bottom Footing Reinf.)

SUBSTRUCTURE
MONO 102, PIER 42 WB (G1)

SHEET A 42

COMMONWEALTH OF KENTUCKY
DEPARTMENT OF HIGHWAYS
FRANKFORT
COUNTY OF
JEFFERSON

I64-13TH ST. TO 7TH ST.
LOUISVILLE – LEXINGTON ROAD

SP 56-273-11L

STATION 208+08 **P. E. PROJECT NO.** I 64-2 (35) 3

CONSTRUCTION PROJECT NO.	MAINTENANCE PROJECT NO.	DRAWING NO.
		18572

LETTITG DATE

DESIGNED BY PME CHECKED BY RBS DATE 3-71 REVISED
DETAILED BY EB CHECKED BY RBS DATE 4/28/71 REVISED
TRACED BY CHECKED BY DATE REVISED

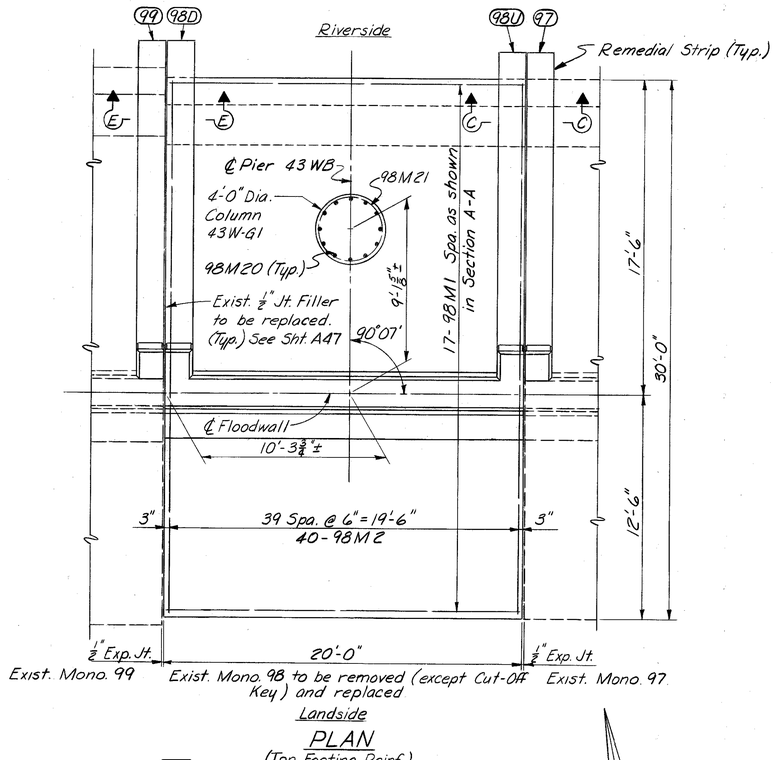

PLAN
(Top Footing Reinf.)

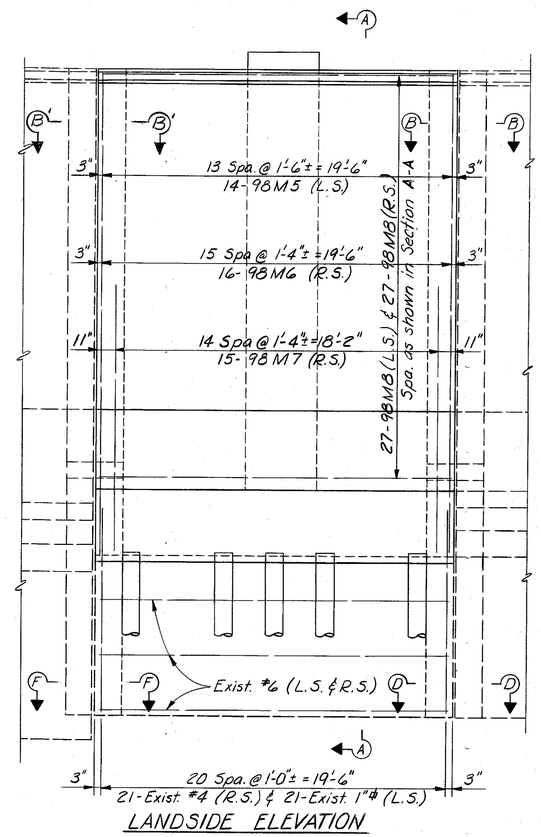

LANDSIDE ELEVATION

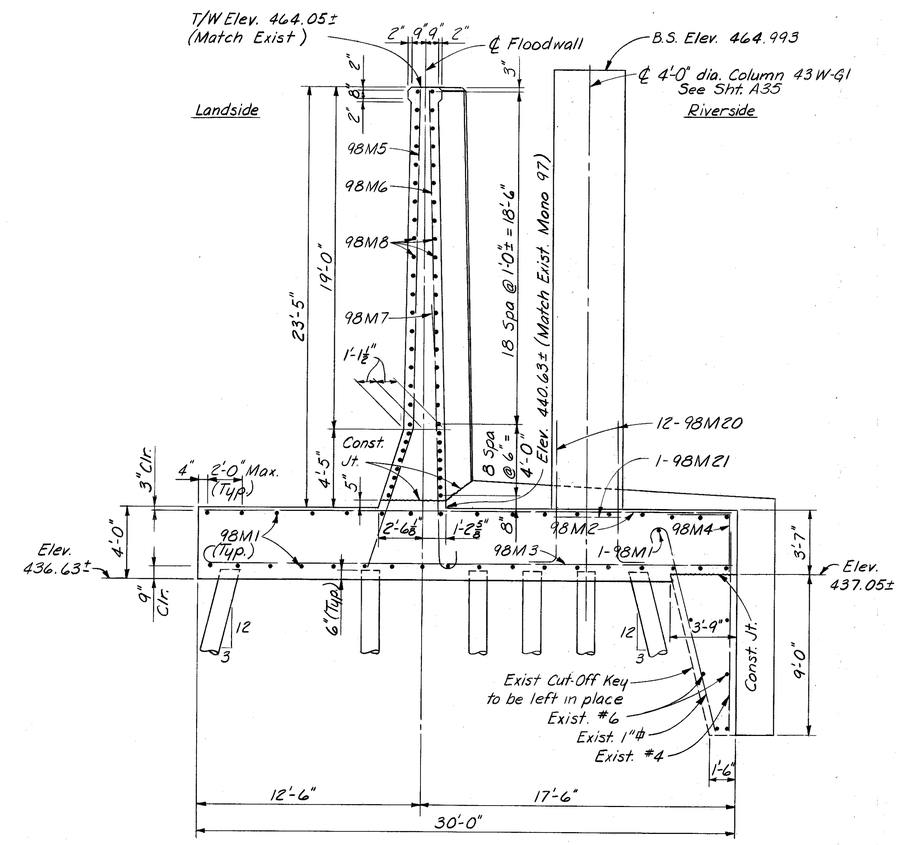

SECTION A-A

NOTE:
For Floodwall Monolith Notes See Sht. A37
Column to be located relative to Work Point.
See Pile Record Sheet.

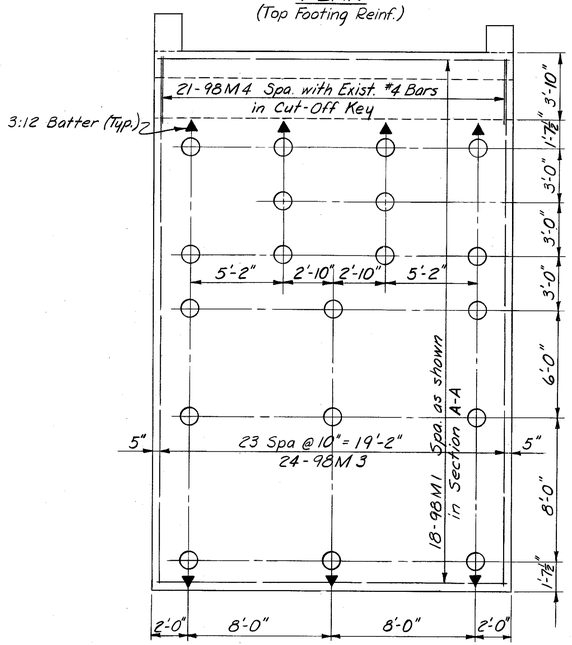

PLAN
(Bottom Footing Reinf.)

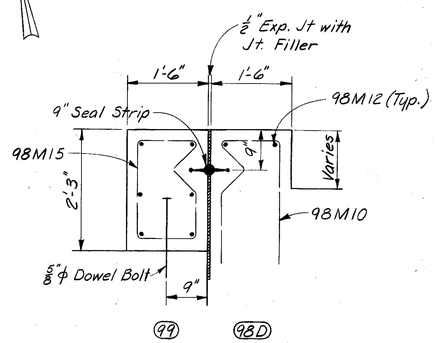

SECTION E-E

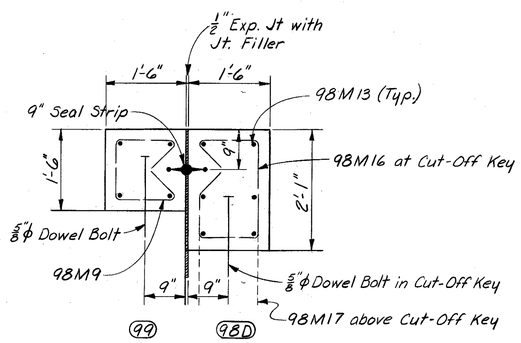

SECTION F-F

SUBSTRUCTURE
MONO 98, PIER 43WB (G1)

SHEET A43

COMMONWEALTH OF KENTUCKY
DEPARTMENT OF HIGHWAYS
FRANKFORT
COUNTY OF
JEFFERSON
I64-13TH ST. TO 7TH ST.
LOUISVILLE — LEXINGTON ROAD
SP 56-273-11L
STATION 208+08 **P. E. PROJECT NO.** I64-2(35)3

CONSTRUCTION PROJECT NO.	MAINTENANCE PROJECT NO.	DRAWING NO.
		18572

LETTITG DATE

DESIGNED BY PME DATE 3-71 REVISED
DETAILED BY EB DATE 4-71 REVISED
TRACED BY DATE REVISED
CHECKED BY RBS DATE REVISED
CHECKED BY RBS DATE REVISED
CHECKED BY DATE REVISED

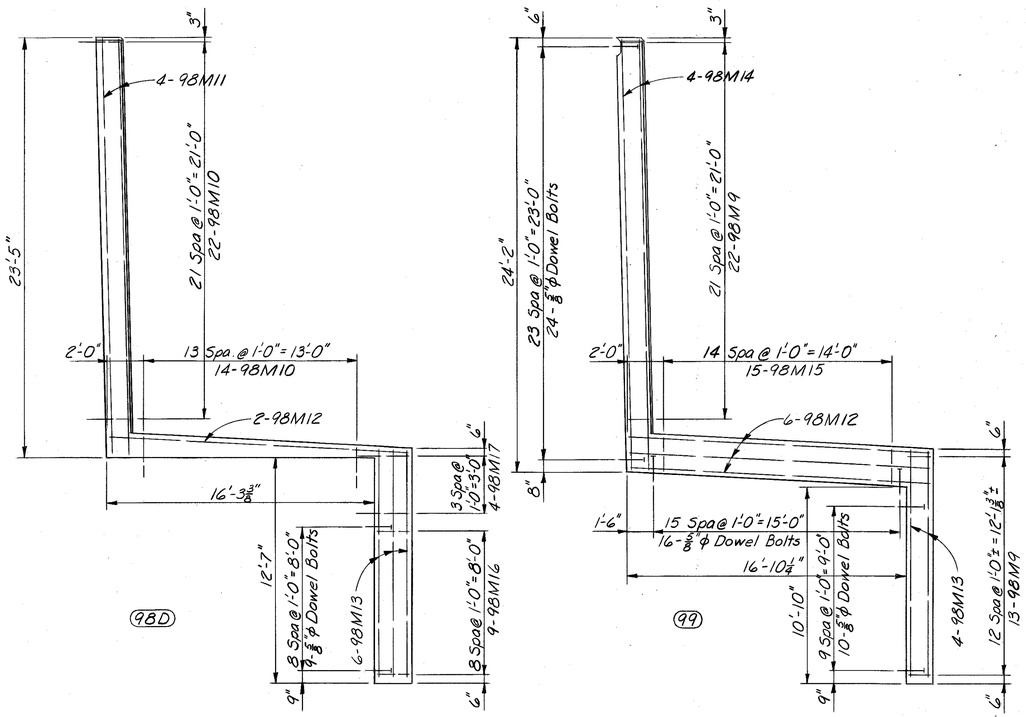

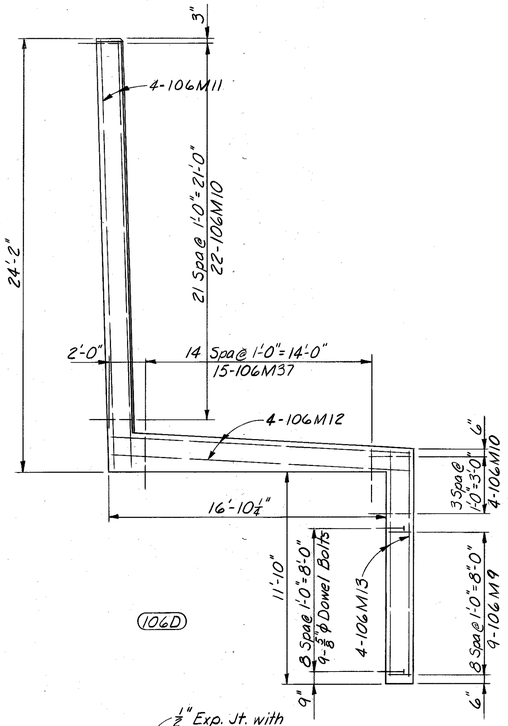

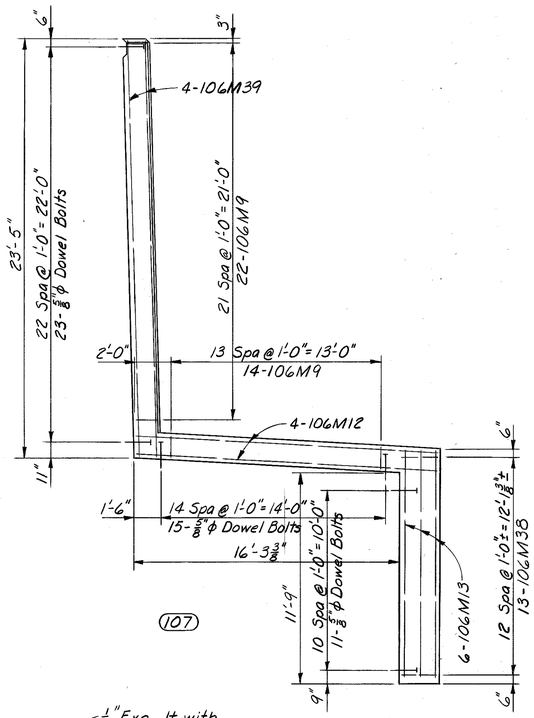

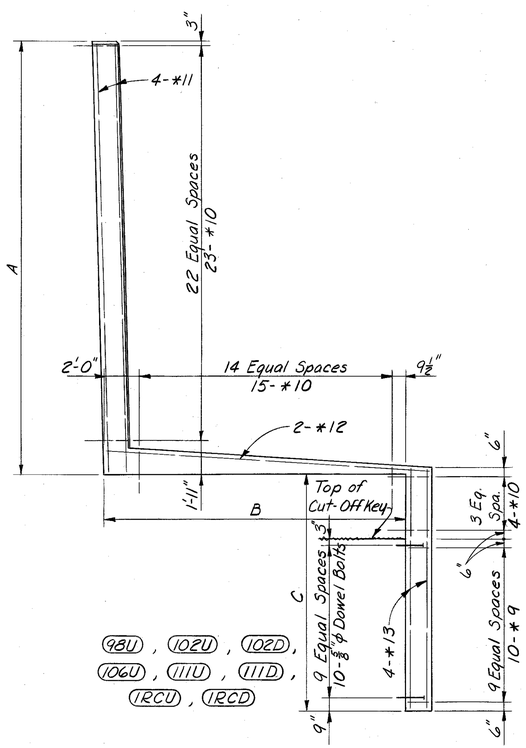

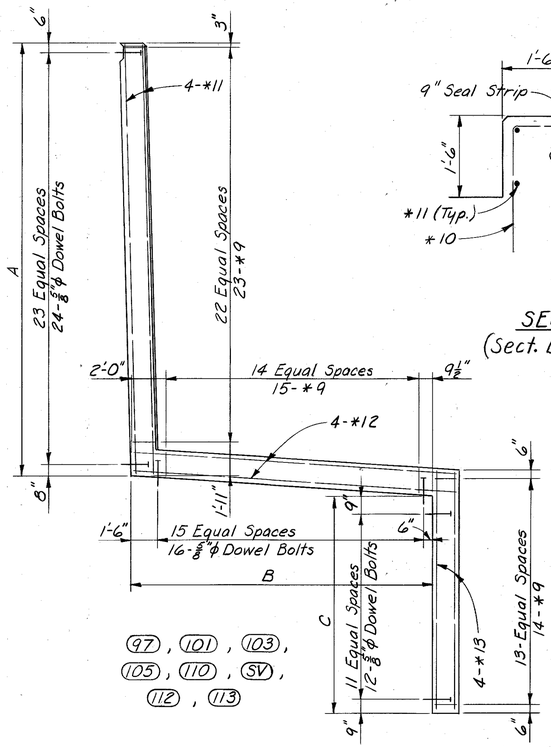

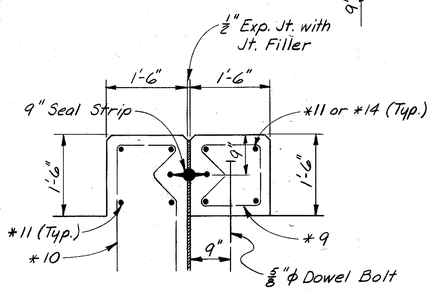

SECTION B-B
(Sect. B'-B' Oppo. Hand)

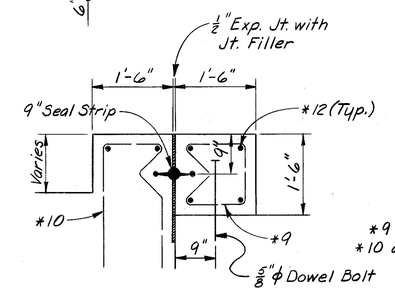

SECTION C-C

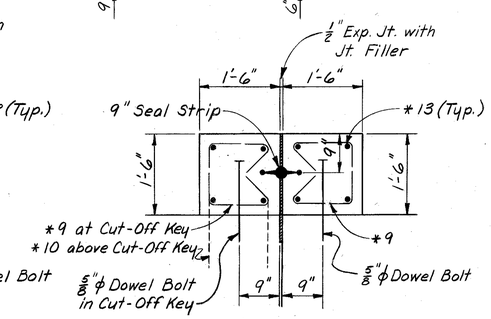

SECTION D-D

NOTE:
For Floodwall Monolith Notes See Sht. A37
* = Prefix to bar no. (*9 = 98M9)

MONO.	STRIP	*	A	B	C
98	97	98M	23'-5"	16'-3 3/8"	11'-9"
	98U				12'-7"
102	101, 103	102M	24'-2"	16'-10 1/4"	12'-2"
	102U, 102D				13'-2"
106	105	106M	24'-2"	16'-10 1/4"	12'-2"
	106U				13'-2"
111	110, SV	111M	22'-8"	15'-8 5/8"	11'-4"
	111U, 111D				12'-0"
1RC	112, 113	1RC	22'-8"	15'-8 5/8"	11'-4"
	1RCU, 1RCD				12'-0"

SUBSTRUCTURE
FLOODWALL REMEDIAL STRIPS

SHEET A44

COMMONWEALTH OF KENTUCKY
DEPARTMENT OF HIGHWAYS
FRANKFORT
COUNTY OF
JEFFERSON

I 64-13TH ST. TO 7TH ST.
LOUISVILLE—LEXINGTON ROAD

STATION 208+08

SP 56-273-11L
P. E. PROJECT NO. I 64-2 (35) 3

CONSTRUCTION PROJECT NO.	MAINTENANCE PROJECT NO.	DRAWING NO.
		1857Z

LETTITG DATE

DESIGNED BY EB CHECKED BY DATE REVISED
DETAILED BY RBS CHECKED BY DATE 4/27/71 REVISED
TRACED BY CHECKED BY DATE REVISED

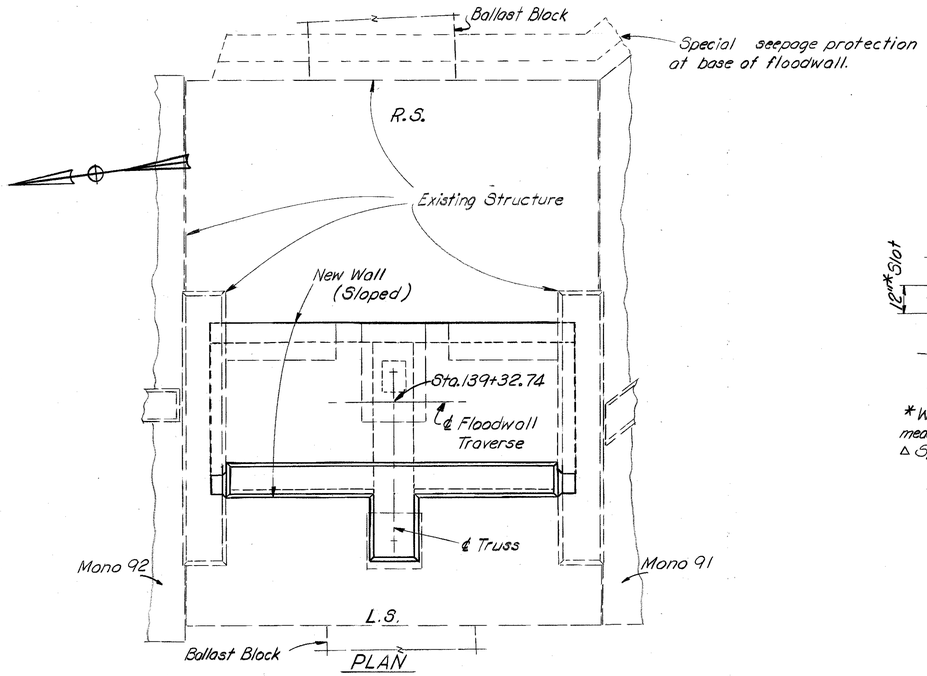

PLAN

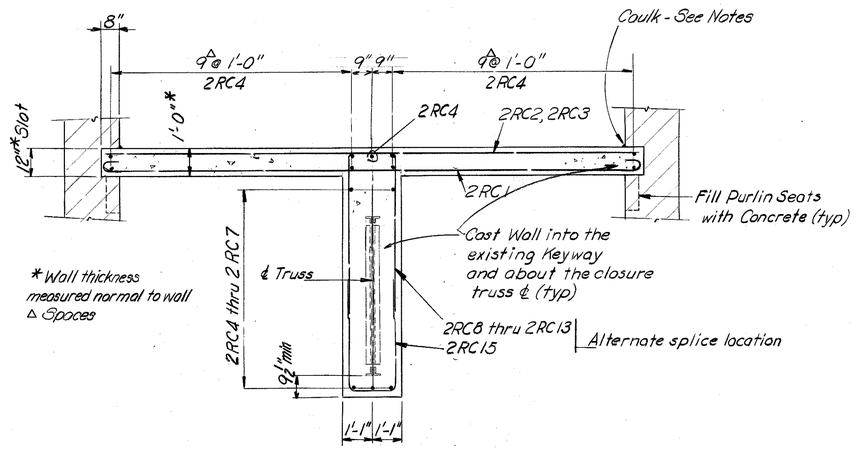

SECTION B-B

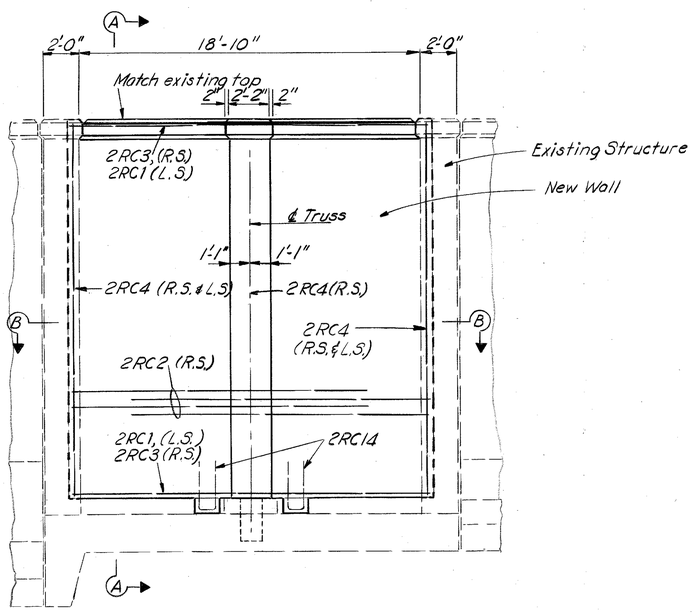

LAND SIDE ELEVATION

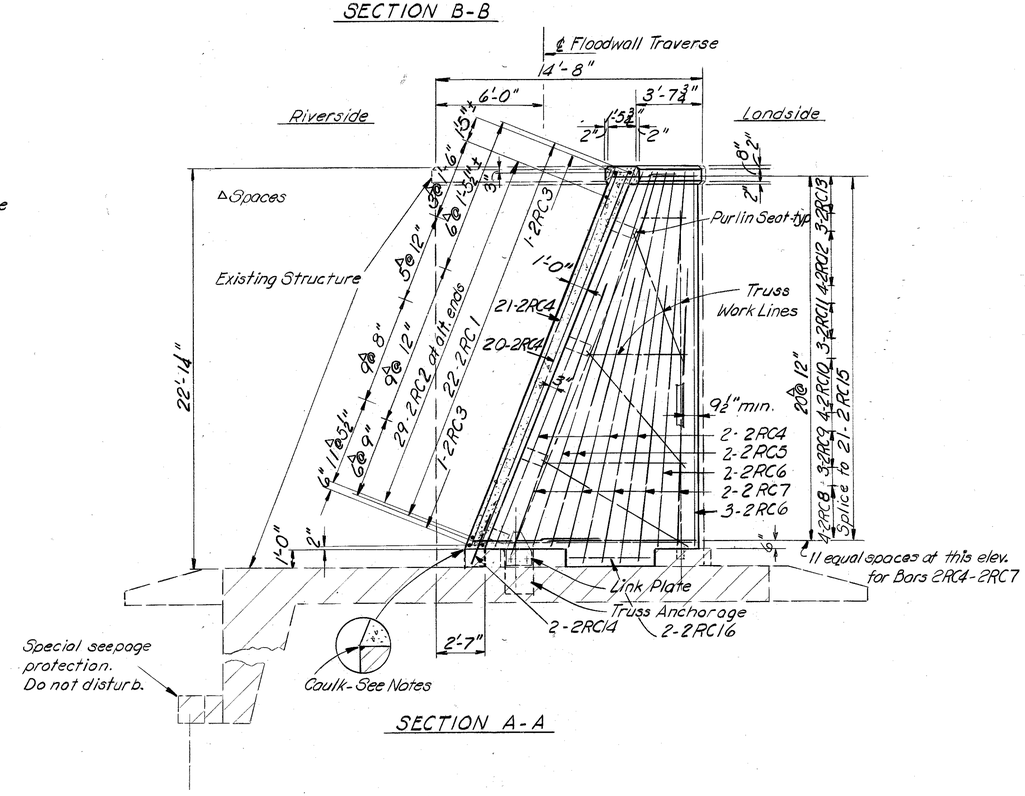

SECTION A-A

Notes

See Floodwall Monolith Notes on Sheet A 37

The existing aluminum truss is stored in the gate storage vault at the site. The Contractor shall erect the truss as shown under the supervision of the City Engineer of Louisville or his representative.

Since the embedded truss is aluminum, extreme care must be taken to see that the concrete used does not contain any trace of calcium chloride, also no reinforcement or tie steel may be placed closer than six inches to the truss.

Sandblast the existing concrete surfaces and wet them thoroughly before placing the new concrete.

The truss shall be erected according to the appropriate instructions. It is imperative that the link plate is correctly assembled to the truss anchorage and the truss to the link plate. The truss is the center support in this closure ℄

The joints on the river side shall be caulked with an approved silicone-rubber compound. If there is no chamfer along the bottom, make one ¾" ± in the new concrete. Caulking is incidental to Concrete, Class "A."

SHEET A45

COMMONWEALTH OF KENTUCKY
DEPARTMENT OF HIGHWAYS
FRANKFORT
COUNTY OF
JEFFERSON

I 64-13TH ST. TO 7TH ST
LOUISVILLE — LEXINGTON
ROAD

STATION 208+08 | P. E. PROJECT NO. I 64-2(35)3 | SP 56-273-11L

CONSTRUCTION PROJECT NO.	MAINTENANCE PROJECT NO.	DRAWING NO.
		18572

SUBSTRUCTURE
RAILROAD CLOSURE 2RC

LETTING DATE

DESIGNED BY RBS	CHECKED BY DHC	DATE 9-72	REVISED
DETAILED BY RBS	CHECKED BY RHC	DATE 7-72	REVISED
TRACED BY	CHECKED BY	DATE	REVISED

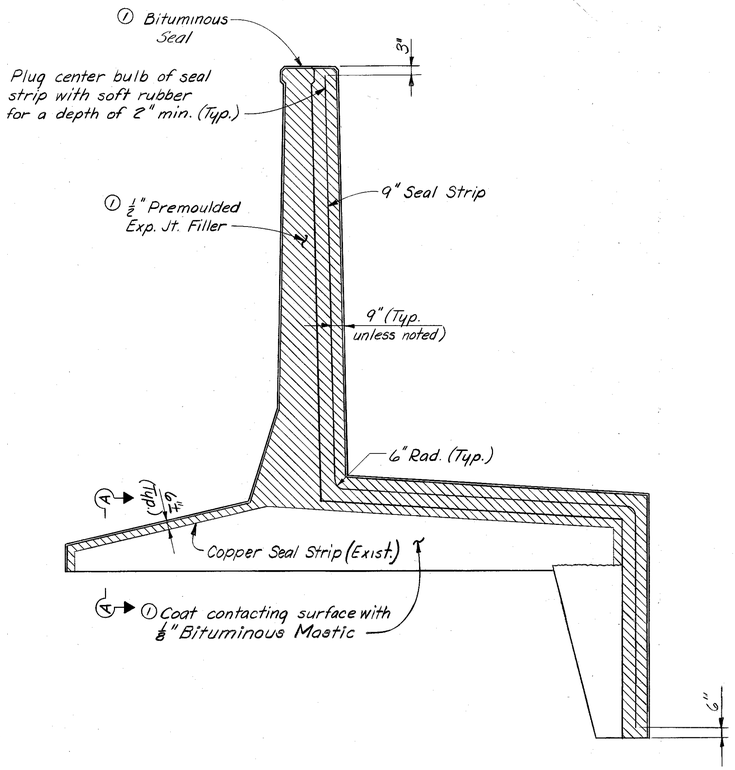

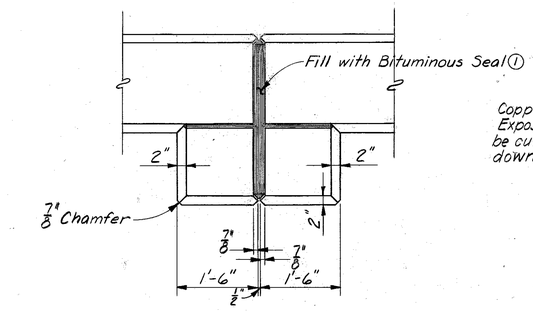

PLAN

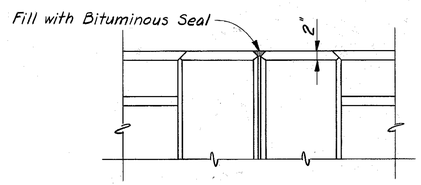

ELEVATION

TOP of WALL DETAILS

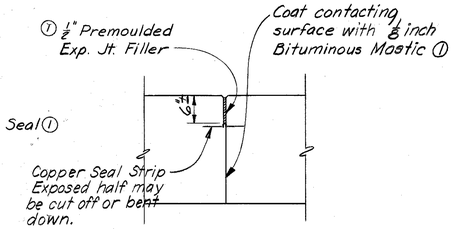

SECTION A-A

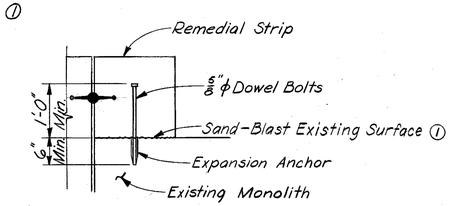

REMEDIAL STRIP CONNECTION DETAIL

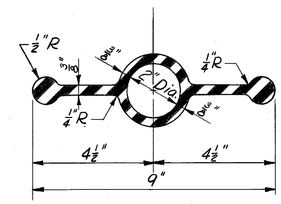

SEAL STRIP DETAIL

ESTIMATE OF QUANTITIES FOR MONOLITHS

MONOLITH NUMBER	Concrete Class A	Steel Reinf	Piles Options A thru F Lin. Ft.		Structure Excavation Common	Placing Piles Thru Fill / Alternate A & Under Floodwall / Preboring Category C	Remove Existing Monoliths	‡ Dowel Bolts with Expansion Anchors	‡ 9" Seal Strip
	Cu. Yds.	Lbs.	Furn.	Driven	Cu. Yds.	Lin. Ft.	Lump Sum	Each	Lin. Ft.
1RC	299.9	31082	1275	1275	128	792	Lump Sum	124	98
111	163.4	13965	766	766	80	475	" "	124	98
106	261.2**	36466**	1630	1630	84	996	" "	120	103
102	161.3	17220	795	795	53	587	" "	124	104
98	154.1	16229	810	810	57	505	" "	121	100
2RC	30.1	2671	None	None	0		none	0	0
TOTALS	1070.0	117633	5276	5276	402 *	3355	Lump Sum	613	503

* Includes removing soil directly above existing footing.
** Conc. & Reinf. for Col. R4-7 is listed in Ramp Quantities.
① ½" Premoulded Exp. Joint Filler, Copper Seal Strip, ⅛" Bituminous Mastic, Sandblasting existing surfaces and exposed reinforcement, and Paint are incidental to Class "A" Concrete.
‡ Dimensions and Materials to be approved by U. S. Corps of Engineers.

SHEET A47

SUBSTRUCTURE
MISCELLANEOUS MONO DETAILS

COMMONWEALTH OF KENTUCKY
DEPARTMENT OF HIGHWAYS
FRANKFORT
COUNTY OF
JEFFERSON
I64-13TH ST. TO 7TH ST.
LOUISVILLE—LEXINGTON ROAD
S P 56-273-11L
STATION 208+08 **P. E. PROJECT NO.** I 64-2(35)3

CONSTRUCTION PROJECT NO.	MAINTENANCE PROJECT NO.	DRAWING NO.
		18572

LETTITG DATE

DESIGNED BY EB DATE
DETAILED BY DATE
TRACED BY DATE
CHECKED BY 28.5 DATE 1-71
CHECKED BY DATE
CHECKED BY DATE
REVISED
REVISED
REVISED

BILL OF REINFORCEMENT - COL./FTG. UNITS

	Mark	Type	Size	No. Req.	Length Ft.	Length In.	Location	a Ft.	a In.
Col./Ftg. 26W-G1	26W1-1	Str.	11	17	30	7	Col.-Vertical		
	" -2	22	11	17	10	3	Ftg. & Col. (Dowel)	8	4
	" -3	T3	5	1	14	10	Ftg. Hoop	4	1¼
	" -4	T5	4	1	423	5	Col. Spiral (33.25 Turns) *	4	1
	" -5	1	8	11	12	8	Ftg. Trans.	10	6
	" -6	1	6	11	10	0	Ftg. Long.	8	6
	" -7	17A	4	3	4	6	Mas. Pt. Brg. Bar -Trans.	2	10
	" -8	17A	4	5	3	10	" -Long.	2	2
Col./Ftg. 26W-G3	26W3-1	Str.	11	17	30	1	Col.-Vertical		
	" -2	22	11	17	10	3	Ftg. & Col. (Dowel)	8	4
	" -3	T3	5	1	14	10	Ftg. Hoop	4	1¼
	" -4	T5	4	1	417	1	Col. Spiral (32.75 Turns) *	4	1
	" -5	1	8	11	12	8	Ftg. Trans.	10	6
	" -6	1	6	11	10	0	Ftg. Long.	8	6
	" -7	17A	4	3	4	6	Mas. Pt. Brg. Bar -Trans.	2	10
	" -8	17A	4	5	3	10	" -Long.	2	2
Col./Ftg. 26E-G2	26E2-1	Str.	11	15	30	10	Col.-Vertical		
	" -2	22	11	15	10	3	Ftg. & Col. (Dowel)	8	4
	" -3	T3	5	1	14	10	Ftg. Hoop	4	1¼
	" -4	T5	4	1	426	7	Col. Spiral (33.50 Turns) *	4	1
	" -5	1	8	12	12	8	Ftg. Trans.	10	6
	" -6	1	6	11	10	0	Ftg. Long.	8	6
	" -7	17A	4	3	4	6	Mas. Pt. Brg. Bar -Trans.	2	10
	" -8	17A	4	5	3	10	" -Long.	2	2
Col./Ftg. 26E-G4	26E4-1	Str.	11	15	31	7	Col.-Vertical		
	" -2	22	11	15	10	3	Ftg. & Col. (Dowel)	8	4
	" -3	T3	5	1	14	10	Ftg. Hoop	4	1¼
	" -4	T5	4	1	436	2	Col. Spiral (34.25 Turns) *	4	1
	" -5	1	8	12	12	8	Ftg. Trans.	10	6
	" -6	1	6	11	10	0	Ftg. Long.	8	6
	" -7	17A	4	3	4	6	Mas. Pt. Brg. Bar -Trans.	2	10
	" -8	17A	4	5	3	10	" -Long.	2	2
Col./Ftg. 27W-G1	27W1-1	Str.	11	15	29	7	Col.-Vertical		
	" -2	22	11	15	10	3	Ftg. & Col. (Dowel)	8	4
	" -3	T3	5	1	14	10	Ftg. Hoop	4	1¼
	" -4	T5	4	1	410	8	Col. Spiral (32.25 Turns) *	4	1
	" -5	1	8	12	12	8	Ftg. Trans.	10	6
	" -6	1	8	17	14	8	Ftg. Long.	12	6
	" -7	17A	4	5	4	0	Mas. Pt. Brg. Bar -Trans.	2	4
	" -8	17A	4	5	4	0	" -Long.	2	4
Col./Ftg. 27W-G3	27W3-1	Str.	11	15	29	1	Col.-Vertical		
	" -2	22	11	15	10	3	Ftg. & Col. (Dowel)	8	4
	" -3	T3	5	1	14	10	Ftg. Hoop	4	1¼
	" -4	T5	4	1	404	4	Col. Spiral (31.75 Turns) *	4	1
	" -5	1	8	12	12	8	Ftg. Trans.	10	6
	" -6	1	8	17	14	8	Ftg. Long.	12	6
	" -7	17A	4	5	4	0	Mas. Pt. Brg. Bar -Trans.	2	4
	" -8	17A	4	5	4	0	" - Long.	2	4

	Mark	Type	Size	No. Req.	Length Ft.	Length In.	Location	a Ft.	a In.
Col./Ftg. 27E-G2	27E2-1	Str.	10	21	29	7	Col.-Vertical		
	" -2	22	11	21	9	9	Ftg. & Col. (Dowel)	7	10
	" -3	T3	5	1	14	10	Ftg. Hoop	4	1¼
	" -4	T5	4	1	410	8	Col. Spiral (32.25 Turns) *	4	1
	" -5	1	8	12	12	8	Ftg. Trans.	10	6
	" -6	1	8	17	14	8	Ftg. Long.	12	6
	" -7	17A	4	5	4	0	Mas. Pt. Brg. Bar -Trans.	2	4
	" -8	17A	4	5	4	0	" -Long.	2	4
Col./Ftg. 27E-G4	27E4-1	Str.	10	21	30	4	Col. - Vertical		
	" -2	22	11	21	9	9	Ftg. & Col. (Dowel)	7	10
	" -3	T3	5	1	14	10	Ftg. Hoop	4	1¼
	" -4	T5	4	1	420	3	Col. Spiral (33.00 Turns) *	4	1
	" -5	1	8	12	12	8	Ftg. Trans.	10	6
	" -6	1	8	17	14	8	Ftg. Long.	12	6
	" -7	17A	4	5	4	0	Mas. Pt. Brg. Bar -Trans.	2	4
	" -8	17A	4	5	4	0	" -Long.	2	4
Col./Ftg. 28W-G1	28W1-1	Str.	11	15	29	1	Col. - Vertical		
	" -2	22	11	15	10	3	Ftg. & Col. (Dowel)	8	4
	" -3	T3	5	1	14	10	Ftg. Hoop	4	1¼
	" -4	T5	4	1	404	4	Col. Spiral (31.75 Turns) *	4	1
	" -5	1	8	11	12	8	Ftg. Trans.	10	6
	" -6	1	6	11	10	0	Ftg. Long.	8	6
	" -7	17A	4	3	4	6	Mas. Pt. Brg. Bar -Trans.	2	10
	" -8	17A	4	5	3	10	" -Long.	2	2
Col./Ftg. 28W-G3	28W3-1	Str.	11	15	28	1	Col. - Vertical		
	" -2	22	11	15	10	3	Ftg. & Col. (Dowel)	8	4
	" -3	T3	5	1	14	10	Ftg. Hoop	4	1¼
	" -4	T5	4	1	391	7	Col. Spiral (30.75 Turns) *	4	1
	" -5	1	8	11	12	8	Ftg. Trans.	10	6
	" -6	1	6	11	10	0	Ftg. Long.	8	6
	" -7	17A	4	3	4	6	Mas. Pt. Brg. Bar - Trans.	2	10
	" -8	17A	4	5	3	10	" - Long.	2	2
Col./Ftg. 28E-G2	28E2-1	Str.	11	15	28	7	Col. - Vertical		
	" -2	22	11	15	10	3	Ftg. & Col. (Dowel)	8	4
	" -3	T3	5	1	14	10	Ftg. Hoop	4	1¼
	" -4	T5	4	1	397	11	Col. Spiral (31.25 Turns) *	4	1
	" -5	1	6	11	10	0	Ftg. Trans.	8	6
	" -6	1	6	11	10	0	Ftg. Long.	8	6
	" -7	17A	4	3	4	4	Mas. Pt. Brg. Bar -Trans.	2	8
	" -8	17A	4	5	3	8	" - Long.	2	0
Col./Ftg. 28E-G4	28E4-1	Str.	11	15	28	7	Col. - Vertical		
	" -2	22	11	15	10	3	Ftg. & Col. (Dowel)	8	4
	" -3	T3	5	1	14	10	Ftg. Hoop	4	1¼
	" -4	T5	4	1	397	11	Col. Spiral (37.25 Turns) *	4	1
	" -5	1	6	11	10	0	Ftg. Trans.	8	6
	" -6	1	6	11	10	0	Ftg. Long.	8	6
	" -7	17A	4	3	4	4	Mas. Pt. Brg. Bar - Trans.	2	8
	" -8	17A	4	5	3	8	" - Long.	2	0

	Mark	Type	Size	No. Req.	Length Ft.	Length In.	Location	a Ft.	a In.
Col./Ftg. 29W-G1	29W1-1	Str.	9	18	26	8	Col. - Vertical		
	" -2	22	11	18	9	0	Ftg. & Col. (Dowel)	7	1
	" -3	T3	5	1	13	3	Ftg. Hoop	3	7¼
	" -4	T5	4	1	329	5	Col. Spiral (29.50 Turns) *	3	7
	" -5	1	6	16	10	0	Ftg. Trans.	8	6
	" -6	1	6	16	10	0	Ftg. Long.	8	6
	" -7	17A	4	5	4	8	Mas. Pt. Brg. Bar - Trans.	3	0
	" -8	17A	4	5	4	0	" - Long.	2	4
Col./Ftg. 29W-G3	29W3-1	Str.	9	18	26	8	Col. - Vertical		
	" -2	22	11	18	9	9	Ftg. & Col. (Dowel)	7	10
	" -3	T3	5	1	13	3	Ftg. Hoop	3	7¼
	" -4	T5	4	1	337	10	Col. Spiral (30.25 Turns) *	3	7
	" -5	1	6	15	10	0	Ftg. Trans.	8	6
	" -6	1	6	15	10	0	Ftg. Long.	8	6
	" -7	17A	4	5	4	2	Mas. Pt. Brg. Bar -Trans.	2	6
	" -8	17A	4	5	4	2	" - Long.	2	6
Col./Ftg. 29E-G2	29E2-1	Str.	11	15	26	7	Col. - Vertical		
	" -2	22	11	15	9	9	Ftg. & Col. (Dowel)	7	10
	" -3	T3	5	1	13	3	Ftg. Hoop	3	7¼
	" -4	T5	4	1	326	8	Col. Spiral (29.25 Turns) *	3	7
	" -5	1	7	12	10	3	Ftg. Trans.	8	6
	" -6	1	7	11	10	3	Ftg. Long.	8	6
	" -7	17A	4	5	4	8	Mas. Pt. Brg. Bar -Trans.	3	0
	" -8	17A	4	5	4	0	" - Long.	2	4
Col./Ftg. 29E-G4	29E4-1	Str.	11	15	27	1	Col. - Vertical		
	" -2	22	11	15	9	9	Ftg. & Col. (Dowel)	7	10
	" -3	T3	5	1	13	3	Ftg. Hoop	3	7¼
	" -4	T5	4	1	332	3	Col. Spiral (29.75 Turns) *	3	7
	" -5	1	8	13	12	8	Ftg. Trans.	10	6
	" -6	1	7	11	10	3	Ftg. Long.	8	6
	" -7	17A	4	3	4	6	Mas. Pt. Brg. Bar -Trans.	2	10
	" -8	17A	4	5	3	10	" - Long.	2	2
Col./Ftg. 30W-1	30W1-1	Str.	9	31	25	8	Col. - Vertical		
	" -2	22	11	31	11	6	Ftg. & Col. (Dowel)	9	7
	" -3	T3	5	1	16	5	Ftg. Hoop	4	7¼
	" -4	T5	4	1	429	0	Col. Spiral (30.00 Turns) *	4	7
	" -5	1	8	18	14	8	Ftg. Trans.	12	6
	" -6	1	8	24	16	8	Ftg. Long.	14	6
	" -7	17A	4	5	5	0	Mas. Pt. Brg. Bar - Trans	3	4
	" -8	17A	4	5	5	0	" - Long	3	4

* No. of turns @ 12" pitch plus 1½ turns at each end required for the column.
Size 4 Spiral equals size W20 wire.
For Bar Bending Details see Sheet A56.

SHEET A48

SUBSTRUCTURE
BILL OF REINFORCEMENT

COMMONWEALTH OF KENTUCKY
DEPARTMENT OF HIGHWAYS
FRANKFORT
COUNTY OF
JEFFERSON

I 64-13TH ST. TO 7TH ST.
LOUISVILLE—LEXINGTON ROAD

SP 56-273-11L

STATION 208408 **P.E. PROJECT NO.** I 64-2 (35) 3

CONSTRUCTION PROJECT NO.	MAINTENANCE PROJECT NO.	DRAWING NO.
		18572

LETTING DATE

DESIGNED BY CBF CHECKED BY
DETAILED BY CHECKED BY
TRACED BY CHECKED BY

DATE REVISED
DATE 5-71 REVISED
DATE REVISED

BILL OF REINFORCEMENT - COL./FTG. UNITS

	Mark	Type	Size	No. Reg.	Length Ft.	Length In.	Location	a Ft.	a In.
Col./Ftg. 30W-G3	30W3-1	Str.	10	21	27	1	Col.-Vertical		
	" -2	22	11	21	9	9	Ftg. & Col. (Dowel)	7	10
	" -3	T3	5	1	14	10	Ftg. Hoop	4	1¼
	" -4	T5	4	1	378	10	Col. Spiral (29.75 Turns) *	4	1
	" -5	1	8	12	12	8	Ftg. Trans.	10	6
	" -6	1	8	19	14	8	Ftg. Long.	12	6
	" -7	17A	4	5	4	2	Mas. Rt. Brg. Bar -Trans.	2	6
	" -8	17A	4	5	4	2	" -Long.	2	6

	Mark	Type	Size	No. Reg.	Length Ft.	Length In.	Location	a Ft.	a In.
Col./Ftg. 30E-G4	30E4-1	Str.	11	28	25	10	Col.-Vertical		
	" -2	22	11	28	10	3	Ftg. & Col. (Dowel)	8	4
	" -3	T3	5	1	14	10	Ftg. Hoop	4	1¼
	" -4	T5	4	1	362	11	Col. Spiral (28.50 Turns) *	4	1
	" -5	1	8	14	12	8	Ftg. Trans.	10	6
	" -6	1	8	18	14	8	Ftg. Long.	12	6
	" -7	17A	4	5	4	4	Mas. Rt. Brg. Bar -Trans.	2	8
	" -8	17A	4	5	4	4	" -Long.	2	8

	Mark	Type	Size	No. Reg.	Length Ft.	Length In.	Location	a Ft.	a In.
Col./Ftg. 31W-G3	31W3-1	Str.	11	15	25	10	Col.-Vertical		
	" -2	22	11	15	10	3	Ftg. & Col. (Dowel)	8	4
	" -3	T3	5	1	14	10	Ftg. Hoop	4	1¼
	" -4	T5	4	1	362	11	Col. Spiral (28.50 Turns) *	4	1
	" -5	1	8	12	12	8	Ftg. Trans.	10	6
	" -6	1	6	12	10	0	Ftg. Long.	8	6
	" -7	17A	4	5	4	8	Mas. Rt. Brg. Bar -Trans.	3	0
	" -8	17A	4	5	4	0	" -Long.	2	4

	Mark	Type	Size	No. Reg.	Length Ft.	Length In.	Location	a Ft.	a In.
Col./Ftg. 31E-2	31E2-1	Str.	11	19	25	7	Col.-Vertical		
	" -2	22	11	19	10	9	Ftg. & Col. (Dowel)	8	10
	" -3	T3	5	1	16	5	Ftg. Hoop	4	7¼
	" -4	T5	4	1	404	0	Col. Spiral (28.25 Turns) *	4	7
	" -5	1	8	27	16	8	Ftg. Trans.	14	6
	" -6	1	8	20	16	8	Ftg. Long.	14	6
	" -7	17A	4	5	5	0	Mas. Rt. Brg. Bar -Trans.	3	4
	" -8	17A	4	5	4	4	" -Long.	2	8

	Mark	Type	Size	No. Reg.	Length Ft.	Length In.	Location	a Ft.	a In.
Col./Ftg. 31E-G4	31E4-1	Str.	11	15	26	10	Col.-Vertical		
	" -2	22	11	15	10	3	Ftg. & Col. (Dowel)	8	4
	" -3	T3	5	1	14	10	Ftg. Hoop	4	1¼
	" -4	T5	4	1	375	8	Col. Spiral (29.50 Turns) *	4	1
	" -5	1	8	12	12	8	Ftg. Trans.	10	6
	" -6	1	6	12	10	0	Ftg. Long.	8	6
	" -7	17A	4	3	4	4	Mas. Rt. Brg. Bar -Trans.	2	8
	" -8	17A	4	5	3	8	" -Long.	2	0

	Mark	Type	Size	No. Reg.	Length Ft.	Length In.	Location	a Ft.	a In.
Col./Ftg. 32W-G1	32W1-1	Str.	11	15	25	7	Col.-Vertical		
	" -2	22	11	15	10	3	Ftg. & Col. (Dowel)	8	4
	" -3	T3	5	1	14	10	Ftg. Hoop	4	1¼
	" -4	T5	4	1	359	9	Col. Spiral (28.25 Turns) *	4	1
	" -5	1	8	12	12	8	Ftg. Trans.	10	6
	" -6	1	6	12	10	0	Ftg. Long.	8	6
	" -7	17A	4	5	5	0	Mas. Rt. Brg. Bar -Trans.	3	4
	" -8	17A	4	5	4	4	" - Long.	2	8

	Mark	Type	Size	No. Reg.	Length Ft.	Length In.	Location	a Ft.	a In.
Col./Ftg. 32W-3	32W3-1	Str.	11	19	24	10	Col.-Vertical		
	" -2	22	11	19	10	9	Ftg. & Col. (Dowel)	8	10
	" -3	T3	5	1	16	5	Ftg. Hoop	4	7¼
	" -4	T5	4	1	393	3	Col. Spiral (27.50 Turns) *	4	7
	" -5	1	8	29	16	8	Ftg. Trans.	14	6
	" -6	1	8	28	16	8	Ftg. Long.	14	6
	" -7	17A	4	5	4	6	Mas. Rt. Brg. Bar -Trans.	2	10
	" -8	17A	4	2	3	6	" -Trans.	1	10
	" -9	17A	4	5	5	2	Mas. Rt. Brg. Bar - Long.	3	6
	" -10	17A	4	2	4	2	" -Long.	2	6

	Mark	Type	Size	No. Reg.	Length Ft.	Length In.	Location	a Ft.	a In.
Col./Ftg. 32E-G2	32E2-1	Str.	11	12	25	4	Col. - Vertical		
	" -2	22	11	12	9	9	Ftg. & Col. (Dowel)	7	10
	" -3	T3	5	1	13	3	Ftg. Hoop	3	7¼
	" -4	T5	4	1	312	8	Col. Spiral (28.00 Turns) *	3	7
	" -5	1	7	11	10	3	Ftg. Trans.	8	6
	" -6	1	7	11	10	3	Ftg. Long.	8	6
	" -7	17A	4	5	4	8	Mas. Rt. Brg. Bar -Trans.	3	0
	" -8	17A	4	5	4	0	" -Long.	2	4

	Mark	Type	Size	No. Reg.	Length Ft.	Length In.	Location	a Ft.	a In.
Col./Ftg. 32E-G4	32E4-1	Str.	11	12	26	4	Col. - Vertical		
	" -2	22	11	12	9	9	Ftg. & Col. (Dowel)	7	10
	" -3	T3	5	1	13	3	Ftg. Hoop	3	7¼
	" -4	T5	4	1	323	10	Col. Spiral (29.00 Turns) *	3	7
	" -5	1	7	11	10	3	Ftg. Trans.	8	6
	" -6	1	7	11	10	3	Ftg. Long.	8	6
	" -7	17A	4	3	4	6	Mas. Rt. Brg. Bar -Trans.	2	10
	" -8	17A	4	5	3	10	" -Long.	2	2

	Mark	Type	Size	No. Reg.	Length Ft.	Length In.	Location	a Ft.	a In.
Col./Ftg. 33W-G1	33W1-1	Str.	10	21	26	1	Col. - Vertical		
	" -2	22	11	21	9	9	Ftg. & Col. (Dowel)	7	10
	" -3	T3	5	1	14	10	Ftg. Hoop	4	1¼
	" -4	T5	4	1	366	1	Col. Spiral (28.75 Turns) *	4	1
	" -5	1	8	12	12	8	Ftg. Trans.	10	6
	" -6	1	8	20	14	8	Ftg. Long.	12	6
	" -7	17A	4	5	4	2	Mas. Rt. Brg. Bar -Trans.	2	6
	" -8	17A	4	5	4	2	" - Long.	2	6

	Mark	Type	Size	No. Reg.	Length Ft.	Length In.	Location	a Ft.	a In.
Col./Ftg. 33W-G3	33W3-1	Str.	11	15	24	10	Col. - Vertical		
	" -2	22	11	15	10	3	Ftg. & Col. (Dowel)	8	4
	" -3	T3	5	1	14	10	Ftg. Hoop	4	1¼
	" -4	T5	4	1	350	2	Col. Spiral (27.50 Turns) *	4	1
	" -5	1	8	11	11	8	Ftg. Trans.	9	6
	" -6	1	8	17	13	8	Ftg. Long.	11	6
	" -7	17A	4	5	4	0	Mas. Rt. Brg. Bar -Trans.	2	4
	" -8	17A	4	5	4	0	" - Long.	2	4

	Mark	Type	Size	No. Reg.	Length Ft.	Length In.	Location	a Ft.	a In.
Col./Ftg. 33W-G5	33W5-1	Str.	11	15	24	4	Col. - Vertical		
	" -2	22	11	15	10	3	Ftg. & Col. (Dowel)	8	4
	" -3	T3	5	1	14	10	Ftg. Hoop	4	1¼
	" -4	T5	4	1	343	10	Col. Spiral (27.00 Turns) *	4	1
	" -5	1	8	11	11	8	Ftg. Trans.	9	6
	" -6	1	8	17	13	8	Ftg. Long.	11	6
	" -7	17A	4	5	4	2	Mas. Rt. Brg. Bar - Trans.	2	6
	" -8	17A	4	5	4	2	" - Long.	2	6

	Mark	Type	Size	No. Reg.	Length Ft.	Length In.	Location	a Ft.	a. In.
Col./Ftg. 33E-G2	33E2-1	Str.	11	12	26	4	Col. - Vertical		
	" -2	22	11	12	9	9	Ftg. & Col. (Dowel)	7	10
	" -3	T3	5	1	13	3	Ftg. Hoop	3	7¼
	" -4	T5	4	1	323	10	Col. Spiral (29.00 Turns)*	3	7
	" -5	1	7	11	10	3	Ftg. Trans.	8	6
	" -6	1	6	9	10	0	Ftg. Long.	8	6
	" -7	17A	4	3	4	6	Mas. Rt. Brg. Bar -Trans.	2	10
	" -8	17A	4	5	3	10	" - Long.	2	2

	Mark	Type	Size	No. Reg.	Length Ft.	Length In.	Location	a Ft.	a In.
Col./Ftg. 33E-G4	33E4-1	Str.	11	12	27	7	Col. - Vertical		
	" -2	22	11	12	9	9	Ftg. & Col. (Dowel)	7	10
	" -3	T3	5	1	13	3	Ftg. Hoop	3	7¼
	" -4	T5	4	1	337	10	Col. Spiral (30.25 Turns) *	3	7
	" -5	1	7	11	10	3	Ftg. Trans.	8	6
	" -6	1	6	9	10	0	Ftg. Long.	8	6
	" -7	17A	4	3	4	6	Mas. Rt. Brg. Bar -Trans.	2	10
	" -8	17A	4	5	3	10	" - Long.	2	2

	Mark	Type	Size	No. Reg.	Length Ft.	Length In.	Location	a Ft.	a In.
Col./Ftg. 34W-G1	34W1-1	Str.	11	18	25	10	Col. - Vertical		
	" -2	22	11	18	10	9	Ftg. & Col. (Dowel)	8	10
	" -3	T3	5	1	16	5	Ftg. Hoop	4	7¼
	" -4	T5	4		407	7	Col. Spiral (28.50 Turns)*	4	7
	" -5	1	6	11	10	0	Ftg. Trans.	8	6
	" -6	1	6	9	10	0	Ftg. Long.	8	6
	" -7	17A	4	6	4	6	Mas. Rt. Brg. Bar -Trans.	2	10
	" -8	17A	4	5	4	6	" - Long.	2	10

	Mark	Type	Size	No. Reg.	Length Ft.	Length In.	Location	a Ft.	a In.
Col./Ftg. 34W-G3	34W3-1	Str.	11	18	24	7	Col. - Vertical		
	" -2	22	11	18	10	9	Ftg. & Col. (Dowel)	8	10
	" -3	T3	5	1	16	5	Ftg. Hoop	4	7¼
	" -4	T5	4	1	389	8	Col. Spiral (27.25 Turns) *	4	7
	" -5	1	6	11	10	0	Ftg. Trans.	8	6
	" -6	1	6	9	10	0	Ftg. Long.	8	6
	" -7	17A	4	6	4	6	Mas. Rt. Brg. Bar -Trans.	2	10
	" -8	17A	4	5	4	6	" - Long.	2	10

	Mark	Type	Size	No. Reg.	Length Ft.	Length In.	Location	a Ft.	a In.
Col./Ftg. R1-17A	1R17A -1	Str.	11	18	26	10	Col. - Vertical		
	" -2	22	11	18	10	9	Ftg. & Col. (Dowel)	8	10
	" -3	T3	5	1	16	5	Ftg. Hoop	4	7¼
	" -4	T5	4	1	421	10	Col. Spiral (29.50 Turns) *	4	7
	" -5	1	6	9	10	0	Ftg. Trans.	8	6
	" -6	1	6	9	10	0	Ftg. Long.	8	6
	" -7	17A	4	6	4	4	Mas. Rt. Brg. Bar -Trans	2	8
	" -8	17A	4	5	4	4	" -Long	2	8

* No. of turns @ 12" pitch plus 1½ turns at each end required for the column. Size 4 Spiral equals size W20 wire.

SUBSTRUCTURE
BILL OF REINFORCEMENT

SHEET A49

COMMONWEALTH OF KENTUCKY
DEPARTMENT OF HIGHWAYS
FRANKFORT
COUNTY OF
JEFFERSON

I 64-13TH ST. TO 7TH ST.
LOUISVILLE—LEXINGTON ROAD

SP 56-273-IIL

STATION 208408 **P. E. PROJECT NO.** I 64-2 (35) 3

CONSTRUCTION PROJECT NO.	MAINTENANCE PROJECT NO.	DRAWING NO.
		18572

LETTITG DATE

DATE DATE DATE

REVISED REVISED REVISED

DATE DATE DATE

DESIGNED BY CHECKED BY
DETAILED BY C.G.F. CHECKED BY R. Lock DATE 3-71
TRACED BY CHECKED BY

BILL OF REINFORCEMENT - COL./FTG. UNITS

	Mark	Type	Size	No. Req.	Length Ft.	Length In.	Location	a Ft.	a In.
Col./Ftg. R1-17B	1R17B-1	Str.	11	18	25	4	Col.-Vertical		
	" -2	22	11	18	10	9	Ftg. & Col. (Dowel)	8	10
	" -3	T3	5	1	16	5	Ftg. Hoop	4	7¼
	" -4	T5	4	1	400	5	Col. Spiral (28.00 Turns) *	4	7
	" -5	1	6	9	10	0	Ftg. Trans.	8	6
	" -6	1	6	9	10	0	Ftg. Long.	8	6
	" -7	17A	4	6	4	8	Mas. Pt. Brg. Bar -Trans.	3	0
	" -8	17A	4	5	4	8	" -Long.	3	0

	Mark	Type	Size	No. Req.	Length Ft.	Length In.	Location	a Ft.	a In.
Col./Ftg. 34E-G2	34E2-1	Str.	10	24	26	4	Col.-Vertical		
	" -2	22	11	24	10	3	Ftg. & Col. (Dowel)	8	4
	" -3	T3	5	1	16	5	Ftg. Hoop	4	7¼
	" -4	T5	4	1	414	9	Col. Spiral (29.00 Turns) *	4	7
	" -5	1	8	16	13	8	Ftg. Trans.	11	6
	" -6	1	8	22	16	8	Ftg. Long.	14	6
	" -7	17A	4	5	4	6	Mas. Pt. Brg. Bar -Trans.	2	10
	" -8	17A	4	5	4	6	" -Long.	2	10

	Mark	Type	Size	No. Req.	Length Ft.	Length In.	Location	a Ft.	a In.
Col./Ftg. 34E-G4	34E4-1	Str.	9	29	26	8	Col.-Vertical		
	" -2	22	11	29	10	3	Ftg. & Col. (Dowel)	8	4
	" -3	T3	5	1	16	5	Ftg. Hoop	4	7¼
	" -4	T5	4	1	425	5	Col. Spiral (29.75 Turns) *	4	7
	" -5	1	8	16	13	8	Ftg. Trans.	11	6
	" -6	1	8	22	16	8	Ftg. Long.	14	6
	" -7	17A	4	5	4	6	Mas. Pt. Brg. Bar -Trans.	2	10
	" -8	17A	4	5	4	6	" -Long.	2	10

	Mark	Type	Size	No. Req.	Length Ft.	Length In.	Location	a Ft.	a In.
Col./Ftg. 35W-G1	35W1-1	Str.	11	15	25	1	Col.-Vertical		
	" -2	22	11	15	10	3	Ftg. & Col. (Dowel)	8	4
	" -3	T3	5	1	14	10	Ftg. Hoop	4	1¼
	" -4	T5	4	1	353	4	Col. Spiral (27.75 Turns) *	4	1
	" -5	1	8	11	11	8	Ftg. Trans.	9	6
	" -6	1	8	17	13	8	Ftg. Long.	11	6
	" -7	17A	4	5	4	0	Mas. Pt. Brg. Bar -Trans.	2	4
	" -8	17A	4	5	4	0	" -Long.	2	4

	Mark	Type	Size	No. Req.	Length Ft.	Length In.	Location	a Ft.	a In.
Col./Ftg. 35W-G3	35W3-1	Str.	11	15	23	7	Col-Vertical		
	" -2	22	11	15	10	3	Ftg. & Col. (Dowel)	8	4
	" -3	T3	5	1	14	10	Ftg. Hoop	4	1¼
	" -4	T5	4	1	334	3	Col. Spiral (26.25 Turns) *	4	1
	" -5	1	8	11	11	8	Ftg. Trans.	9	6
	" -6	1	8	17	13	8	Ftg. Long.	11	6
	" -7	17A	4	5	4	0	Mas. Pt. Brg. Bar -Trans.	2	4
	" -8	17A	4	5	4	0	" -Long.	2	4

	Mark	Type	Size	No. Req.	Length Ft.	Length In.	Location	a Ft.	a In.
Col./Ftg. 35E-G2	35E2-1	Str.	11	18	25	4	Col.-Vertical		
	" -2	22	11	18	10	3	Ftg. & Col. (Dowel)	8	4
	" -3	T3	5	1	14	10	Ftg. Hoop	4	1¼
	" -4	T5	4	1	356	7	Col. Spiral (28.00 Turns) *	4	1
	" -5	1	8	36	16	8	Ftg. Trans.	14	6
	" -6	1	8	27	16	8	Ftg. Long.	14	6
	" -7	17A	4	5	4	6	Mas. Pt. Brg. Bar -Trans.	2	10
	" -8	17A	4	2	3	4	" -Trans.	1	8
	" -9	17A	4	5	4	8	Mas. Pt. Brg. Bar -Long.	3	0
	" -10	17A	4	2	3	8	" -Long.	2	0

	Mark	Type	Size	No. Req.	Length Ft.	Length In.	Location	a Ft.	a In.
Col./Ftg. 35E-G4	35E4-1	Str.	11	18	26	7	Col.-Vertical		
	" -2	22	11	18	10	3	Ftg. & Col. (Dowel)	8	4
	" -3	T3	5	1	14	10	Ftg. Hoop	4	1¼
	" -4	T5	4	1	372	6	Col. Spiral (29.25 Turns) *	4	1
	" -5	1	8	36	16	8	Ftg. Trans.	14	6
	" -6	1	8	27	16	8	Ftg. Long.	14	6
	" -7	17A	4	5	4	6	Mas. Pt. Brg. Bar -Trans.	2	10
	" -8	17A	4	2	3	4	" -Trans.	1	8
	" -9	17A	4	5	4	8	Mas. Pt. Brg. Bar -Long.	3	0
	" -10	17A	4	2	3	8	" -Long.	2	0

	Mark	Type	Size	No. Req.	Length Ft.	Length In.	Location	a Ft.	a In.
Col./Ftg. 36W-G1	36W1-1	Str.	11	12	23	4	Col.-Vertical		
	" -2	22	11	12	9	9	Ftg. & Col. (Dowel)	7	10
	" -3	T3	5	1	13	3	Ftg. Hoop	3	7¼
	" -4	T5	4	1	290	4	Col. Spiral (26.00 Turns) *	3	7
	" -5	1	7	11	10	3	Ftg. Trans.	8	6
	" -6	1	6	11	10	0	Ftg. Long.	8	6
	" -7	17A	4	3	4	6	Mas. Pt. Brg. Bar -Trans.	2	10
	" -8	17A	4	5	3	10	" -Long.	2	2

	Mark	Type	Size	No. Req.	Length Ft.	Length In.	Location	a Ft.	a In.
Col./Ftg. 36W-G3	36W3-1	Str.	11	12	21	10	Col.-Vertical		
	" -2	22	11	12	9	9	Ftg. & Col. (Dowel)	7	10
	" -3	T3	5	1	13	3	Ftg. Hoop	3	7¼
	" -4	T5	4	1	273	7	Col. Spiral (24.50 Turns) *	3	7
	" -5	1	7	11	10	3	Ftg. Trans.	8	6
	" -6	1	6	11	10	0	Ftg. Long.	8	6
	" -7	17A	4	3	4	6	Mas. Pt. Brg. Bar -Trans.	2	10
	" -8	17A	4	5	3	10	" -Long.	2	2

	Mark	Type	Size	No. Req.	Length Ft.	Length In.	Location	a Ft.	a In.
Col./Ftg. 36E-G2	36E2-1	Str.	11	12	25	4	Col.-Vertical		
	" -2	22	11	11	9	9	Ftg. & Col. (Dowel)	7	10
	" -3	T3	5	1	13	3	Ftg. Hoop	3	7¼
	" -4	T5	4	1	312	8	Col. Spiral (28.00 Turns) *	3	7
	" -5	1	7	13	10	3	Ftg. Trans.	8	6
	" -6	1	6	13	10	0	Ftg. Long.	8	6
	" -7	17A	4	3	4	6	Mas. Pt. Brg. Bar -Trans.	2	10
	" -8	17A	4	5	3	10	" -Long.	2	2

	Mark	Type	Size	No. Req.	Length Ft.	Length In.	Location	a Ft.	a In.
Col./Ftg. 36E-G4	36E4-1	Str.	11	12	26	7	Col.-Vertical		
	" -2	22	11	12	9	9	Ftg. & Col. (Dowel)	7	10
	" -3	T3	5	1	13	3	Ftg. Hoop	3	7¼
	" -4	T5	4	1	326	8	Col. Spiral (29.25 Turns) *	3	7
	" -5	1	6	9	10	0	Ftg. Trans.	8	6
	" -6	1	6	9	10	0	Ftg. Long.	8	6
	" -7	17A	4	3	4	4	Mas. Pt. Brg. Bar -Trans.	2	8
	" -8	17A	4	5	3	8	" -Long.	2	0

	Mark	Type	Size	No. Req.	Length Ft.	Length In.	Location	a Ft.	a In.
Col./Ftg. 36E-G6	36E6-1	Str.	11	12	27	4	Col.-Vertical		
	" -2	22	11	12	9	9	Ftg. & Col. (Dowel)	7	10
	" -3	T3	5	1	13	3	Ftg. Hoop	3	7¼
	" -4	T5	4	1	335	1	Col. Spiral (30.00 Turns) *	3	7
	" -5	1	7	13	10	3	Ftg. Trans.	8	6
	" -6	1	6	13	10	0	Ftg. Long.	8	6
	" -7	17A	4	3	4	6	Mas. Pt. Brg. Bar -Trans.	2	10
	" -8	17A	4	5	3	10	" -Long.	2	2

	Mark	Type	Size	No. Req.	Length Ft.	Length In.	Location	a Ft.	a In.
Col./Ftg. 37E-G2	37E2-1	Str.	11	15	23	4	Col.-Vertical		
	" -2	22	11	15	10	3	Ftg. & Col. (Dowel)	8	4
	" -3	T3	5	1	14	10	Ftg. Hoop	4	1¼
	" -4	T5	4	1	331	1	Col. Spiral (26.00 Turns) *	4	1
	" -5	1	8	11	11	8	Ftg. Trans.	9	6
	" -6	1	8	17	13	8	Ftg. Long.	11	6
	" -7	17A	4	5	4	0	Mas. Pt. Brg. Bar -Trans.	2	4
	" -8	17A	4	5	4	0	" -Long.	2	4

	Mark	Type	Size	No. Req.	Length Ft.	Length In.	Location	a Ft.	a In.
Col./Ftg. 37E-G4	37E4-1	Str.	11	15	25	10	Col.-Vertical		
	" -2	22	11	15	10	3	Ftg. & Col. (Dowel)	8	4
	" -3	T3	5	1	14	10	Ftg. Hoop	4	1¼
	" -4	T5	4	1	362	11	Col. Spiral (28.50 Turns) *	4	1
	" -5	1	8	11	11	8	Ftg. Trans.	9	6
	" -6	1	8	17	13	8	Ftg. Long.	11	6
	" -7	17A	4	5	4	0	Mas. Pt. Brg. Bar -Trans.	2	4
	" -8	17A	4	5	4	0	" -Long.	2	4

	Mark	Type	Size	No. Req.	Length Ft.	Length In.	Location	a Ft.	a In.
Col./Ftg. 37E-G6	37E6-1	Str.	11	15	27	4	Col.-Vertical		
	" -2	22	11	15	10	3	Ftg. & Col. (Dowel)	8	4
	" -3	T3	5	1	14	10	Ftg. Hoop	4	1¼
	" -4	T5	4	1	382	0	Col. Spiral (30.00 Turns) *	4	1
	" -5	1	8	11	11	8	Ftg. Trans.	9	6
	" -6	1	8	17	13	8	Ftg. Long.	11	6
	" -7	17A	4	5	4	2	Mas. Pt. Brg. Bar -Trans.	2	6
	" -8	17A	4	5	4	2	" -Long.	2	6

	Mark	Type	Size	No. Req.	Length Ft.	Length In.	Location	a Ft.	a In.
Col./Ftg. 38W-G1	38W1-1	Str.	11	12	19	4	Col.-Vertical		
	" -2	22	11	12	9	9	Ftg. & Col. (Dowel)	7	10
	" -3	T3	5	1	13	3	Ftg. Hoop	3	7¼
	" -4	T5	4	1	245	8	Col. Spiral (22.00 Turns) *	3	7
	" -5	1	6	16	10	0	Ftg. Trans.	8	6
	" -6	1	6	16	10	0	Ftg. Long.	8	6
	" -7	17A	4	5	4	2	Mas. Pt. Brg. Bar -Trans.	2	6
	" -8	17A	4	5	4	2	" -Long.	2	6

	Mark	Type	Size	No. Req.	Length Ft.	Length In.	Location	a Ft.	a In.
Col./Ftg. 38W-G3	38W3-1	Str.	11	12	18	1	Col.-Vertical		
	" -2	22	11	12	9	9	Ftg. & Col. (Dowel)	7	10
	" -3	T3	5	1	13	3	Ftg. Hoop	3	7¼
	" -4	T5	4	1	231	8	Col. Spiral (20.75 Turns) *	3	7
	" -5	1	6	15	10	0	Ftg. Trans.	8	6
	" -6	1	6	14	10	0	Ftg. Long.	8	6
	" -7	17A	4	5	4	8	Mas. Pt. Brg. Bar -Trans	3	0
	" -8	17A	4	5	4	0	" -Long	2	4

* No. of turns @ 12" pitch plus 1½ turns at each end required for the column. Size 4 Spiral equals size W20 wire.

SUBSTRUCTURE
BILL OF REINFORCEMENT

SHEET A50

COMMONWEALTH OF KENTUCKY
DEPARTMENT OF HIGHWAYS
FRANKFORT
COUNTY OF
JEFFERSON

I 64-13TH ST. TO 7TH ST.
LOUISVILLE—LEXINGTON ROAD

SP 56-273-11L

STATION 208+08 **P.E. PROJECT NO.** I 64-2 (35) 3

CONSTRUCTION PROJECT NO.	MAINTENANCE PROJECT NO.	DRAWING NO.
		18572

LETTING DATE

DATE DATE DATE

REVISED REVISED REVISED

DATE DATE 5-71 DATE

DESIGNED BY CHECKED BY
DETAILED BY C.B.C. CHECKED BY T.B. Lore
TRACED BY CHECKED BY

BILL OF REINFORCEMENT - COL./FTG. UNITS

	Mark	Type	Size	No. Req.	Length Ft.	Length In.	Location	a Ft.	a In.
Col./Ftg. 38E-G2	38E2-1	Str.	11	12	23	4	Col.-Vertical		
	" -2	22	11	12	9	9	Ftg. & Col. (Dowel)	7	10
	" -3	T3	5	1	13	3	Ftg. Hoop	3	7¼
	" -4	T5	4	1	290	4	Col. Spiral (26.00 Turns) *	3	7
	" -5	1	7	11	10	3	Ftg. Trans.	8	6
	" -6	1	6	9	10	0	Ftg. Long.	8	6
	" -7	17A	4	3	4	6	Mas. Pt. Brg. Bar -Trans.	2	10
	" -8	17A	4	5	3	10	" -Long.	2	2

	Mark	Type	Size	No. Req.	Length Ft.	Length In.	Location	a Ft.	a In.
Col./Ftg. 38E-G4	38E4-1	Str.	11	12	26	4	Col.-Vertical		
	" -2	22	11	12	9	9	Ftg. & Col. (Dowel)	7	10
	" -3	T3	5	1	13	3	Ftg. Hoop	3	7¼
	" -4	T5	4	1	323	10	Col. Spiral (29.00 Turns) *	3	7
	" -5	1	7	11	10	3	Ftg. Trans.	8	6
	" -6	1	6	9	10	0	Ftg. Long.	8	6
	" -7	17A	4	3	4	6	Mas. Pt. Brg. Bar -Trans.	2	10
	" -8	17A	4	5	3	10	" -Long.	2	2

	Mark	Type	Size	No. Req.	Length Ft.	Length In.	Location	a Ft.	a In.
Col./Ftg. 38E-G6	38E6-1	Str.	11	12	27	1	Col.-Vertical		
	" -2	22	11	12	9	9	Ftg. & Col. (Dowel)	7	10
	" -3	T3	5	1	13	3	Ftg. Hoop	3	7¼
	" -4	T5	4	1	332	3	Col. Spiral (29.75 Turns) *	3	7
	" -5	1	7	12	10	3	Ftg. Trans.	8	6
	" -6	1	6	11	10	0	Ftg. Long.	8	6
	" -7	17A	4	3	4	6	Mas. Pt. Brg. Bar -Trans.	2	10
	" -8	17A	4	5	3	10	" -Long.	2	2

	Mark	Type	Size	No. Req.	Length Ft.	Length In.	Location	a Ft.	a In.
Col./Ftg. 39W-G3	39W3-1	Str.	11	15	17	10	Col.-Vertical		
	" -2	22	11	15	10	3	Ftg. & Col. (Dowel)	8	4
	" -3	T3	5	1	14	10	Ftg. Hoop	4	1¼
	" -4	T5	4	1	261	0	Col. Spiral (20.50 Turns) *	4	1
	" -5	1	8	13	12	8	Ftg. Trans.	10	6
	" -6	1	8	15	14	8	Ftg. Long.	12	6
	" -7	17A	4	5	4	4	Mas. Pt. Brg. Bar -Trans.	2	8
	" -8	17A	4	5	4	4	" -Long.	2	8

	Mark	Type	Size	No. Req.	Length Ft.	Length In.	Location	a Ft.	a In.
Col./Ftg. 39E-G2	39E2-1	Str.	11	18	20	4	Col.-Vertical		
	" -2	22	11	18	10	9	Ftg. & Col. (Dowel)	8	10
	" -3	T3	5	1	16	5	Ftg. Hoop	4	7¼
	" -4	T5	4	1	328	11	Col. Spiral (23.00 Turns) *	4	7
	" -5	1	6	9	10	0	Ftg. Trans.	8	6
	" -6	1	6	9	10	0	Ftg. Long.	8	6
	" -7	17A	4	6	5	0	Mas. Pt. Brg. Bar -Trans.	3	4
	" -8	17A	4	7	4	8	" -Long.	3	0

	Mark	Type	Size	No. Req.	Length Ft.	Length In.	Location	a Ft.	a In.
Col./Ftg. 39E-G4	39E4-1	Str.	11	18	21	10	Col.-Vertical		
	" -2	22	11	18	10	9	Ftg. & Col. (Dowel)	8	10
	" -3	T3	5	1	16	5	Ftg. Hoop	4	7¼
	" -4	T5	4	1	350	4	Col. Spiral (24.50 Turns) *	4	7
	" -5	1	6	9	10	0	Ftg. Trans.	8	6
	" -6	1	6	9	10	0	Ftg. Long.	8	6
	" -7	17A	4	6	5	0	Mas. Pt. Brg. Bar -Trans.	3	4
	" -8	17A	4	7	4	8	" -Long.	3	0

	Mark	Type	Size	No. Req.	Length Ft.	Length In.	Location	a Ft.	a In.
Col./Ftg. 40W-G1	40W1-1	Str.	11	14	21	1	Col.-Vertical		
	" -2	22	11	14	9	9	Ftg. & Col. (Dowel)	7	10
	" -3	T3	5	1	13	3	Ftg. Hoop	3	7¼
	" -4	T5	4	1	265	3	Col. Spiral (23.75 Turns) *	3	7
	" -5	1	8	21	13	8	Ftg. Trans.	11	6
	" -6	1	8	15	13	8	Ftg. Long.	11	6
	" -7	17A	4	5	4	2	Mas. Pt. Brg. Bar -Trans.	2	6
	" -8	17A	4	5	4	2	" -Long.	2	6

	Mark	Type	Size	No. Req.	Length Ft.	Length In.	Location	a Ft.	a In.
Col./Ftg. 40W-G3	40W3-1	Str.	11	12	19	10	Col.-Vertical		
	" -2	22	11	12	9	9	Ftg. & Col. (Dowel)	7	10
	" -3	T3	5	1	13	3	Ftg. Hoop	3	7¼
	" -4	T5	4	1	251	3	Col. Spiral (22.50 Turns) *	3	7
	" -5	1	7	11	10	3	Ftg. Trans.	8	6
	" -6	1	7	9	10	3	Ftg. Long.	8	6
	" -7	17A	4	5	4	8	Mas. Pt. Brg. Bar -Trans.	3	0
	" -8	17A	4	5	4	0	" -Long.	2	4

	Mark	Type	Size	No. Req.	Length Ft.	Length In.	Location	a Ft.	a In.
Col./Ftg. 40E-G2	40E2-1	Str.	11	12	18	4	Col.-Vertical		
	" -2	22	11	12	9	9	Ftg. & Col. (Dowel)	7	10
	" -3	T3	5	1	13	3	Ftg. Hoop	3	7¼
	" -4	T5	4	1	234	6	Col. Spiral (21.00 Turns) *	3	7
	" -5	1	7	10	10	3	Ftg. Trans.	8	6
	" -6	1	7	9	10	3	Ftg. Long.	8	6
	" -7	17A	4	3	4	4	Mas. Pt. Brg. Bar -Trans.	2	8
	" -8	17A	4	5	3	8	" -Long.	2	0

	Mark	Type	Size	No. Req.	Length Ft.	Length In.	Location	a Ft.	a In.
Col./Ftg. 40E-G4	40E4-1	Str.	11	12	19	7	Col.-Vertical		
	" -2	22	11	12	9	9	Ftg. & Col. (Dowel)	7	10
	" -3	T3	5	1	13	3	Ftg. Hoop	3	7¼
	" -4	T5	4	1	248	6	Col. Spiral (22.25 Turns) *	3	7
	" -5	1	6	12	10	0	Ftg. Trans.	8	6
	" -6	1	6	12	10	0	Ftg. Long.	8	6
	" -7	17A	4	3	4	4	Mas. Pt. Brg. Bar -Trans.	2	8
	" -8	17A	4	5	3	8	" -Long.	2	0

	Mark	Type	Size	No. Req.	Length Ft.	Length In.	Location	a Ft.	a In.
Col./Ftg. 41W-G3	41W3-1	Str.	11	12	22	1	Col.-Vertical		
	" -2	22	11	12	9	9	Ftg. & Col. (Dowel)	7	10
	" -3	T3	5	1	13	3	Ftg. Hoop	3	7¼
	" -4	T5	4	1	276	5	Col. Spiral (24.75 Turns) *	3	7
	" -5	1	7	10	10	3	Ftg. Trans.	8	6
	" -6	1	6	9	10	0	Ftg. Long.	8	6
	" -7	17A	4	3	4	6	Mas. Pt. Brg. Bar -Trans.	2	10
	" -8	17A	4	5	3	10	" -Long.	2	2

	Mark	Type	Size	No. Req.	Length Ft.	Length In.	Location	a Ft.	a In.
Col./Ftg. 42W-G3	42W3-1	Str.	11	15	22	10	Col.-Vertical		
	" -2	22	11	15	10	3	Ftg. & Col. (Dowel)	8	4
	" -3	T3	5	1	14	10	Ftg. Hoop	4	1¼
	" -4	T5	4	1	324	8	Col. Spiral (25.50 Turns) *	4	1
	" -5	1	8	11	11	8	Ftg. Trans.	9	6
	" -6	1	8	12	13	8	Ftg. Long.	11	6
	" -7	17A	4	5	4	0	Mas. Pt. Brg. Bar -Trans.	2	4
	" -8	17A	4	5	4	0	" -Long.	2	4

	Mark	Type	Size	No. Req.	Length Ft.	Length In.	Location	a Ft.	a In.
Col./Ftg. 42E-G4	42E4-1	Str.	11	12	23	1	Col.-Vertical		
	" -2	22	11	12	9	9	Ftg. & Col. (Dowel)	7	10
	" -3	T3	5	1	13	3	Ftg. Hoop	3	7¼
	" -4	T5	4	1	287	7	Col. Spiral (25.75 Turns) *	3	7
	" -5	1	6	13	10	0	Ftg. Trans.	8	6
	" -6	1	6	8	10	0	Ftg. Long.	8	6
	" -7	17A	4	3	4	4	Mas. Pt. Brg. Bar -Trans.	2	8
	" -8	17A	4	5	3	8	" -Long.	2	0

	Mark	Type	Size	No. Req.	Length Ft.	Length In.	Location	a Ft.	a In.
Col./Ftg. 43W-G3	43W3-1	Str.	11	12	23	4	Col.-Vertical		
	" -2	22	11	12	9	9	Ftg. & Col. (Dowel)	7	10
	" -3	T3	5	1	13	3	Ftg. Hoop	3	7¼
	" -4	T5	4	1	290	4	Col. Spiral (26.00 Turns) *	3	7
	" -5	1	6	12	10	0	Ftg. Trans.	8	6
	" -6	1	6	11	10	0	Ftg. Long.	8	6
	" -7	17A	4	3	4	4	Mas. Pt. Brg. Bar -Trans.	2	8
	" -8	17A	4	5	3	8	" -Long.	2	0

	Mark	Type	Size	No. Req.	Length Ft.	Length In.	Location	a Ft.	a In.
Col./Ftg. 43E-G4	43E4-1	Str.	11	17	23	10	Col.-Vertical		
	" -2	22	11	17	10	3	Ftg. & Col. (Dowel)	8	4
	" -3	T3	5	1	14	10	Ftg. Hoop	4	1¼
	" -4	T5	4	1	337	5	Col. Spiral (26.50 Turns) *	4	1
	" -5	1	8	14	12	8	Ftg. Trans.	10	6
	" -6	1	8	16	14	8	Ftg. Long.	12	6
	" -7	17A	4	5	4	2	Mas. Pt. Brg. Bar -Trans.	2	6
	" -8	17A	4	5	4	2	" -Long.	2	6

	Mark	Type	Size	No. Req.	Length Ft.	Length In.	Location	a Ft.	a In.
Col./Ftg. 44W-G1	44W1-1	Str.	11	12	25	10	Col.-Vertical		
	" -2	22	11	12	9	9	Ftg. & Col. (Dowel)	7	10
	" -3	T3	5	1	13	3	Ftg. Hoop	3	7¼
	" -4	T5	4	1	318	3	Col. Spiral (28.50 Turns) *	3	7
	" -5	1	6	11	10	0	Ftg. Trans.	8	6
	" -6	1	6	11	10	0	Ftg. Long.	8	6
	" -7	17A	4	3	4	4	Mas. Pt. Brg. Bar -Trans.	2	8
	" -8	17A	4	5	3	8	" -Long.	2	0

	Mark	Type	Size	No. Req.	Length Ft.	Length In.	Location	a Ft.	a In.
Col./Ftg. 44W-G3	44W3-1	Str.	11	12	24	10	Col.-Vertical		
	" -2	22	11	12	9	9	Ftg. & Col. (Dowel)	7	10
	" -3	T3	5	1	13	3	Ftg. Hoop	3	7¼
	" -4	T5	4	1	307	1	Col. Spiral (27.50 Turns) *	3	7
	" -5	1	6	11	10	0	Ftg. Trans.	8	6
	" -6	1	6	11	10	0	Ftg. Long.	8	6
	" -7	17A	4	3	4	4	Mas. Pt. Brg. Bar -Trans	2	8
	" -8	17A	4	5	3	8	" -Long	2	0

* No. of turns @ 12" pitch plus 1½ turns at each end required for the column. Size 4 Spiral equals size W20 wire.

SUBSTRUCTURE
BILL OF REINFORCEMENT

SHEET A51

COMMONWEALTH OF KENTUCKY
DEPARTMENT OF HIGHWAYS
FRANKFORT
COUNTY OF
JEFFERSON

I64-13TH ST. TO 7TH ST.
LOUISVILLE—LEXINGTON ROAD

SP 56-273-11L

STATION 208+08 **P. E. PROJECT NO.** I 64-2 (35) 3

CONSTRUCTION PROJECT NO. | MAINTENANCE PROJECT NO. | DRAWING NO. 18572

LETTITG DATE

DATE DATE DATE

DESIGNED BY CHECKED BY REVISED
DETAILED BY C.B.C. CHECKED BY DATE 5-71 REVISED
TRACED BY CHECKED BY DATE REVISED

BILL OF REINFORCEMENT - COL./FTG. UNITS

	Mark	Type	Size	No. Req.	Length Ft.	Length In.	Location	a Ft.	a In.
Col./Ftg. 44E-G2	44E2-1	Str.	11	15	24	4	Col.-Vertical		
	" -2	22	11	15	10	3	Ftg. & Col. (Dowel)	8	4
	" -3	T3	5	1	14	10	Ftg. Hoop	4	1¼
	" -4	T5	4	1	343	10	Col. Spiral (27.00 Turns) *	4	1
	" -5	1	8	17	13	8	Ftg. Trans.	11	6
	" -6	1	8	12	13	8	Ftg. Long.	11	6
	" -7	17A	4	5	4	8	Mas. Pt. Brg. Bar - Trans.	3	0
	" -8	17A	4	5	4	0	" - Long.	2	4

	Mark	Type	Size	No. Req.	Length Ft.	Length In.	Location	a Ft.	a In.
Col./Ftg. 44E-G4	44E4-1	Str.	11	15	26	1	Col.-Vertical		
	" -2	22	11	15	10	3	Ftg. & Col. (Dowel)	8	4
	" -3	T3	5	1	14	10	Ftg. Hoop	4	1¼
	" -4	T5	4	1	366	1	Col. Spiral (28.75 Turns) *	4	1
	" -5	1	8	17	13	8	Ftg. Trans.	11	6
	" -6	1	8	12	13	8	Ftg. Long.	11	6
	" -7	17A	4	5	4	8	Mas. Pt. Brg. Bar - Trans.	3	0
	" -8	17A	4	5	4	0	" - Long.	2	4

	Mark	Type	Size	No. Req.	Length Ft.	Length In.	Location	a Ft.	a In.
Col./Ftg. 45W-G1	45W1-1	Str.	11	15	26	1	Col.-Vertical		
	" -2	22	11	15	10	3	Ftg. & Col. (Dowel)	8	4
	" -3	T3	5	1	14	10	Ftg. Hoop	4	1¼
	" -4	T5	4	1	366	1	Col. Spiral (28.75 Turns) *	4	1
	" -5	1	8	11	11	8	Ftg. Trans.	9	6
	" -6	1	8	12	13	8	Ftg. Long.	11	6
	" -7	17A	4	5	4	0	Mas. Pt. Brg. Bar - Trans.	2	4
	" -8	17A	4	5	4	0	" - Long.	2	4

	Mark	Type	Size	No. Req.	Length Ft.	Length In.	Location	a Ft.	a In.
Col./Ftg. 45W-G3	45W3-1	Str.	11	15	24	10	Col.-Vertical		
	" -2	22	11	15	10	3	Ftg. & Col. (Dowel)	8	4
	" -3	T3	5	1	14	10	Ftg. Hoop	4	1¼
	" -4	T5	4	1	350	2	Col. Spiral (27.50 Turns) *	4	1
	" -5	1	8	11	11	8	Ftg. Trans.	9	6
	" -6	1	8	12	13	8	Ftg. Long.	11	6
	" -7	17A	4	5	4	0	Mas. Pt. Brg. Bar - Trans.	2	4
	" -8	17A	4	5	4	0	" - Long.	2	4

	Mark	Type	Size	No. Req.	Length Ft.	Length In.	Location	a Ft.	a In.
Col./Ftg. 45E-G6	45E6-1	Str.	11	18	28	7	Col.-Vertical		
	" -2	22	11	18	10	9	Ftg. & Col. (Dowel)	8	10
	" -3	T3	5	1	16	5	Ftg. Hoop	4	7¼
	" -4	T5	4	1	446	11	Col. Spiral (31.25 Turns) *	4	7
	" -5	1	6	9	10	0	Ftg. Trans.	8	6
	" -6	1	6	9	10	0	Ftg. Long.	8	6
	" -7	17A	4	6	4	6	Mas. Pt. Brg. Bar - Trans.	2	10
	" -8	17A	4	5	4	6	" - Long.	2	10

	Mark	Type	Size	No. Req.	Length Ft.	Length In.	Location	a Ft.	a In.
Col./Ftg. 45E-G8	45E8-1	Str.	11	18	29	4	Col.-Vertical		
	" -2	22	11	18	10	9	Ftg. & Col. (Dowel)	8	10
	" -3	T3	5	1	16	5	Ftg. Hoop	4	7¼
	" -4	T5	4	1	457	8	Col. Spiral (32.00 Turns) *	4	7
	" -5	1	6	9	10	0	Ftg. Trans.	8	6
	" -6	1	6	9	10	0	Ftg. Long.	8	6
	" -7	17A	4	6	4	6	Mas. Pt. Brg. Bar - Trans.	2	10
	" -8	17A	4	5	4	6	" - Long.	2	10

	Mark	Type	Size	No. Req.	Length Ft.	Length In.	Location	a Ft.	a In.
Col./Ftg. 46W-G1	46W1-1	Str.	11	12	26	1	Col.-Vertical		
	" -2	22	11	12	9	9	Ftg. & Col. (Dowel)	7	10
	" -3	T3	5	1	13	3	Ftg. Hoop	3	7¼
	" -4	T5	4	1	321	1	Col. Spiral (28.75 Turns) *	3	7
	" -5	1	7	10	10	3	Ftg. Trans.	8	6
	" -6	1	6	9	10	0	Ftg. Long.	8	6
	" -7	17A	4	3	4	4	Mas. Pt. Brg. Bar - Trans.	2	8
	" -8	17A	4	5	3	8	" - Long.	2	0

	Mark	Type	Size	No. Req.	Length Ft.	Length In.	Location	a Ft.	a In.
Col./Ftg. 46W-G3	46W3-1	Str.	11	12	24	10	Col.-Vertical		
	" -2	22	11	12	9	9	Ftg. & Col. (Dowel)	7	10
	" -3	T3	5	1	13	3	Ftg. Hoop	3	7¼
	" -4	T5	4	1	307	1	Col. Spiral (27.50 Turns) *	3	7
	" -5	1	7	10	10	3	Ftg. Trans.	8	6
	" -6	1	6	9	10	0	Ftg. Long.	8	6
	" -7	17A	4	3	4	4	Mas. Pt. Brg. Bar - Trans.	2	8
	" -8	17A	4	5	3	8	" - Long.	2	0

	Mark	Type	Size	No. Req.	Length Ft.	Length In.	Location	a Ft.	a In.
Col./Ftg. 46E-2	46E2-1	Str.	11	12	25	7	Col.-Vertical		
	" -2	22	11	12	9	9	Ftg. & Col. (Dowel)	7	10
	" -3	T3	5	1	13	3	Ftg. Hoop	3	7¼
	" -4	T5	4	1	315	6	Col. Spiral (28.25 Turns) *	3	7
	" -5	1	7	11	10	3	Ftg. Trans.	8	6
	" -6	1	7	9	10	3	Ftg. Long.	8	6
	" -7	17A	4	5	4	8	Mas. Pt. Brg. Bar - Trans.	3	0
	" -8	17A	4	5	4	0	" - Long.	2	4

	Mark	Type	Size	No. Req.	Length Ft.	Length In.	Location	a Ft.	a In.
Col./Ftg. 46E-4	46E4-1	Str.	11	12	26	10	Col.-Vertical		
	" -2	22	11	12	9	9	Ftg. & Col. (Dowel)	7	10
	" -3	T3	5	1	13	3	Ftg. Hoop	3	7¼
	" -4	T5	4	1	329	5	Col. Spiral (29.50 Turns) *	3	7
	" -5	1	8	17	13	8	Ftg. Trans.	11	6
	" -6	1	8	16	13	8	Ftg. Long.	11	6
	" -7	17A	4	5	4	8	Mas. Pt. Brg. Bar - Trans.	3	0
	" -8	17A	4	5	4	0	" - Long.	2	4

	Mark	Type	Size	No. Req.	Length Ft.	Length In.	Location	a Ft.	a In.
Col./Ftg. 46E-6	46E6-1	Str.	11	12	27	1	Col.-Vertical		
	" -2	22	11	12	9	9	Ftg. & Col. (Dowel)	7	10
	" -3	T3	5	1	13	3	Ftg. Hoop	3	7¼
	" -4	T5	4	1	332	3	Col. Spiral (29.75 Turns) *	3	7
	" -5	1	7	10	10	3	Ftg. Trans.	8	6
	" -6	1	7	9	10	3	Ftg. Long.	8	6
	" -7	17A	4	5	4	8	Mas. Pt. Brg. Bar - Trans.	3	0
	" -8	17A	4	5	4	0	" - Long.	2	4

	Mark	Type	Size	No. Req.	Length Ft.	Length In.	Location	a Ft.	a In.
Col./Ftg. 47W-G1	47W1-1	Str.	11	18	26	1	Col.-Vertical		
	" -2	22	11	18	10	9	Ftg. & Col. (Dowel)	8	10
	" -3	T3	5	1	16	5	Ftg. Hoop	4	7¼
	" -4	T5	4	1	411	2	Col. Spiral (28.75 Turns) *	4	7
	" -5	1	6	9	10	0	Ftg. Trans.	8	6
	" -6	1	6	9	10	0	Ftg. Long.	8	6
	" -7	17A	4	6	4	6	Mas. Pt. Brg. Bar - Trans.	2	10
	" -8	17A	4	5	4	6	" - Long.	2	10

	Mark	Type	Size	No. Req.	Length Ft.	Length In.	Location	a Ft.	a In.
Col./Ftg. 47W-G3	47W3-1	Str.	11	18	24	10	Col.-Vertical		
	" -2	22	11	18	10	9	Ftg. & Col. (Dowel)	8	10
	" -3	T3	5	1	16	5	Ftg. Hoop	4	7¼
	" -4	T5	4	1	393	3	Col. Spiral (27.50 Turns) *	4	7
	" -5	1	6	9	10	0	Ftg. Trans.	8	6
	" -6	1	6	9	10	0	Ftg. Long.	8	6
	" -7	17A	4	6	4	6	Mas. Pt. Brg. Bar - Trans.	2	10
	" -8	17A	4	5	4	6	" - Long.	2	10

	Mark	Type	Size	No. Req.	Length Ft.	Length In.	Location	a Ft.	a In.
Col./Ftg. 47W-G5	47W5-1	Str.	11	18	29	4	Col.-Vertical		
	" -2	22	11	18	10	9	Ftg. & Col. (Dowel)	8	10
	" -3	T3	5	1	16	5	Ftg. Hoop	4	7¼
	" -4	T5	4	1	457	8	Col. Spiral (32.00 Turns) *	4	7
	" -5	1	6	9	10	0	Ftg. Trans.	8	6
	" -6	1	6	9	10	0	Ftg. Long.	8	6
	" -7	17A	4	6	4	8	Mas. Pt. Brg. Bar - Trans.	3	0
	" -8	17A	4	5	4	8	" - Long.	3	0

	Mark	Type	Size	No. Req.	Length Ft.	Length In.	Location	a Ft.	a In.
Col./Ftg. 47W-G7	47W7-1	Str.	11	18	29	4	Col.-Vertical		
	" -2	22	11	18	10	9	Ftg. & Col. (Dowel)	8	10
	" -3	T3	5	1	16	5	Ftg. Hoop	4	7¼
	" -4	T5	4	1	457	8	Col. Spiral (32.00 Turns) *	4	7
	" -5	1	6	9	10	0	Ftg. Trans.	8	6
	" -6	1	6	9	10	0	Ftg. Long.	8	6
	" -7	17A	4	6	4	6	Mas. Pt. Brg. Bar - Trans.	2	10
	" -8	17A	4	5	4	6	" - Long.	2	10

	Mark	Type	Size	No. Req.	Length Ft.	Length In.	Location	a Ft.	a In.
Col./Ftg. 47E-2	47E2-1	Str.	11	15	26	1	Col.-Vertical		
	" -2	22	11	15	10	3	Ftg. & Col. (Dowel)	8	4
	" -3	T3	5	1	14	10	Ftg. Hoop	4	1¼
	" -4	T5	4	1	366	1	Col. Spiral (28.75 Turns) *	4	1
	" -5	1	8	12	12	8	Ftg. Trans.	10	6
	" -6	1	8	15	14	8	Ftg. Long.	12	6
	" -7	17A	4	5	4	0	Mas. Pt. Brg. Bar - Trans.	2	4
	" -8	17A	4	5	4	0	" - Long.	2	4

	Mark	Type	Size	No. Req.	Length Ft.	Length In.	Location	a Ft.	a In.
Col./Ftg. 47E-4	47E4-1	Str.	11	15	27	7	Col.-Vertical		
	" -2	22	11	15	10	3	Ftg. & Col. (Dowel)	8	4
	" -3	T3	5	1	14	10	Ftg. Hoop	4	1¼
	" -4	T5	4	1	385	2	Col. Spiral (30.25 Turns) *	4	1
	" -5	1	8	14	12	8	Ftg. Trans.	10	6
	" -6	1	8	15	14	8	Ftg. Long.	12	6
	" -7	17A	4	5	4	2	Mas. Pt. Brg. Bar - Trans	2	6
	" -8	17A	4	5	4	2	" - Long	2	6

* No. of turns @ 12" pitch plus ½ turns at each end required for the column. Size 4 Spiral equals size W20 wire.

SUBSTRUCTURE
BILL OF REINFORCEMENT

SHEET A52

COMMONWEALTH OF KENTUCKY
DEPARTMENT OF HIGHWAYS
FRANKFORT
COUNTY OF
JEFFERSON

I 64-13TH ST. TO 7TH ST.
LOUISVILLE—LEXINGTON ROAD

STATION 208+08 — P. E. PROJECT NO. I 64-2(35)3 — SP 56-273-11L

CONSTRUCTION PROJECT NO. | MAINTENANCE PROJECT NO. | DRAWING NO. 18572

LETTING DATE

DESIGNED BY | CHECKED BY | REVISED
DETAILED BY | CHECKED BY | DATE 5-31 | REVISED
TRACED BY | CHECKED BY | DATE | REVISED
DATE | DATE | DATE

BILL OF REINFORCEMENT - COL./FTG. UNITS

	Mark	Type	Size	No. Req.	Length Ft.	Length In.	Location	a Ft.	a In.
Col./Ftg. 47E-6	47E6-1	Str.	11	15	28	1	Col.-Vertical		
	" -2	22	11	15	10	3	Ftg. & Col. (Dowel)	8	4
	" -3	T3	5	1	14	10	Ftg. Hoop	4	1¼
	" -4	T5	4	1	391	7	Col. Spiral (30.75 Turns) *	4	1
	" -5	(1)	8	12	12	8	Ftg. Trans.	10	6
	" -6	(1)	8	15	14	8	Ftg. Long.	12	6
	" -7	(17A)	4	5	4	0	Mas. Pt. Brg. Bar -Trans.	2	4
	" -8	(17A)	4	5	4	0	" -Long.	2	4

	Mark	Type	Size	No. Req.	Length Ft.	Length In.	Location	a Ft.	a In.
Col./Ftg. 48E-2	48E2-1	Str.	10	16	26	7	Col.-Vertical		
	" -2	22	11	16	9	3	Ftg. & Col. (Dowel)	7	4
	" -3	T3	5	1	13	3	Ftg. Hoop	3	7¼
	" -4	T5	4	1	326	8	Col. Spiral (29.25 Turns) *	3	7
	" -5	(1)	8	17	13	8	Ftg. Trans.	11	6
	" -6	(1)	8	16	13	8	Ftg. Long.	11	6
	" -7	(17A)	4	5	4	8	Mas. Pt. Brg. Bar -Trans.	3	0
	" -8	(17A)	4	5	4	0	" -Long.	2	4

	Mark	Type	Size	No. Req.	Length Ft.	Length In.	Location	a Ft.	a In.
Col./Ftg. 48E-4	48E4-1	Str.	10	16	28	10	Col.-Vertical		
	" -2	22	11	16	9	3	Ftg. & Col. (Dowel)	7	4
	" -3	T3	5	1	13	3	Ftg. Hoop	3	7¼
	" -4	T5	4	1	351	10	Col. Spiral (31.50 Turns) *	3	7
	" -5	(1)	8	18	13	8	Ftg. Trans.	11	6
	" -6	(1)	8	14	13	8	Ftg. Long.	11	6
	" -7	(17A)	4	5	4	8	Mas. Pt. Brg. Bar -Trans.	3	0
	" -8	(17A)	4	5	4	0	" -Long.	2	4

	Mark	Type	Size	No. Req.	Length Ft.	Length In.	Location	a Ft.	a In.
Col./Ftg. 49W-1	49W1-1	Str.	11	12	24	10	Col.-Vertical		
	" -2	22	11	12	9	9	Ftg. & Col. (Dowel)	7	10
	" -3	T3	5	1	13	3	Ftg. Hoop	3	7¼
	" -4	T5	4	1	307	1	Col. Spiral (27.50 Turns) *	3	7
	" -5	(1)	7	10	10	3	Ftg. Trans.	8	6
	" -6	(1)	7	9	10	3	Ftg. Long.	8	6
	" -7	(17A)	4	5	4	8	Mas. Pt. Brg. Bar -Trans.	3	0
	" -8	(17A)	4	5	4	0	" -Long.	2	4

	Mark	Type	Size	No. Req.	Length Ft.	Length In.	Location	a Ft.	a In.
Col./Ftg. 49W-3	49W3-1	Str.	11	18	23	1	Col.-Vertical		
	" -2	22	11	18	10	9	Ftg. & Col. (Dowel)	8	10
	" -3	T3	5	1	16	5	Ftg. Hoop	4	7¼
	" -4	T5	4	1	368	3	Col. Spiral (25.75 Turns) *	4	7
	" -5	(1)	8	15	13	8	Ftg. Trans.	11	6
	" -6	(1)	8	11	13	8	Ftg. Long.	11	6
	" -7	(17A)	4	5	5	0	Mas. Pt. Brg. Bar -Trans.	3	4
	" -8	(17A)	4	5	4	4	" -Long.	2	8

	Mark	Type	Size	No. Req.	Length Ft.	Length In.	Location	a Ft.	a In.
Col./Ftg. 49W-5	49W5-1	Str.	11	12	23	4	Col.-Vertical		
	" -2	22	11	12	9	9	Ftg. & Col. (Dowel)	7	10
	" -3	T3	5	1	13	3	Ftg. Hoop	3	7¼
	" -4	T5	4	1	290	4	Col. Spiral (26.00 Turns) *	3	7
	" -5	(1)	7	11	10	3	Ftg. Trans.	8	6
	" -6	(1)	7	10	10	3	Ftg. Long.	8	6
	" -7	(17A)	4	5	4	8	Mas. Pt. Brg. Bar -Trans.	3	0
	" -8	(17A)	4	5	4	0	" -Long.	2	4

	Mark	Type	Size	No. Req.	Length Ft.	Length In.	Location	a Ft.	a In.
Col./Ftg. 49E-2	49E2-1	Str.	11	15	24	10	Col.-Vertical		
	" -2	22	11	15	10	3	Ftg. & Col. (Dowel)	8	4
	" -3	T3	5	1	14	10	Ftg. Hoop	4	1¼
	" -4	T5	4	1	350	2	Col. Spiral (27.50 Turns) *	4	1
	" -5	(1)	8	17	13	8	Ftg. Trans.	11	6
	" -6	(1)	8	12	13	8	Ftg. Long.	11	6
	" -7	(17A)	4	5	4	2	Mas. Pt. Brg. Bar -Trans.	2	6
	" -8	(17A)	4	5	4	2	" -Long.	2	6

	Mark	Type	Size	No. Req.	Length Ft.	Length In.	Location	a Ft.	a In.
Col./Ftg. 49E-4	49E4-1	Str.	11	15	27	7	Col.-Vertical		
	" -2	22	11	15	10	3	Ftg. & Col. (Dowel)	8	4
	" -3	T3	5	1	14	10	Ftg. Hoop	4	1¼
	" -4	T5	4	1	385	2	Col. Spiral (30.25 Turns) *	4	1
	" -5	(1)	8	17	13	8	Ftg. Trans.	11	6
	" -6	(1)	8	12	13	8	Ftg. Long.	11	6
	" -7	(17A)	4	5	4	2	Mas. Pt. Brg. Bar -Trans.	2	6
	" -8	(17A)	4	5	4	2	" -Long.	2	6

	Mark	Type	Size	No. Req.	Length Ft.	Length In.	Location	a Ft.	a In.
Col./Ftg. 50W-1	50W1-1	Str.	11	15	24	4	Col.-Vertical		
	" -2	22	11	15	10	3	Ftg. & Col. (Dowel)	8	4
	" -3	T3	5	1	14	10	Ftg. Hoop	4	1¼
	" -4	T5	4	1	343	10	Col. Spiral (27.00 Turns) *	4	1
	" -5	(1)	8	12	12	8	Ftg. Trans.	10	6
	" -6	(1)	8	17	14	8	Ftg. Long.	12	6
	" -7	(17A)	4	5	4	0	Mas. Pt. Brg. Bar -Trans.	2	4
	" -8	(17A)	4	5	4	0	" -Long.	2	4

	Mark	Type	Size	No. Req.	Length Ft.	Length In.	Location	a Ft.	a In.
Col./Ftg. 50W-3	50W3-1	Str.	11	15	23	7	Col.-Vertical		
	" -2	22	11	15	10	3	Ftg. & Col. (Dowel)	8	4
	" -3	T3	5	1	14	10	Ftg. Hoop	4	1¼
	" -4	T5	4	1	334	3	Col. Spiral (26.25 Turns) *	4	1
	" -5	(1)	8	12	12	8	Ftg. Trans.	10	6
	" -6	(1)	8	17	14	8	Ftg. Long.	12	6
	" -7	(17A)	4	5	4	0	Mas. Pt. Brg. Bar -Trans.	2	4
	" -8	(17A)	4	5	4	0	" -Long.	2	4

	Mark	Type	Size	No. Req.	Length Ft.	Length In.	Location	a Ft.	a In.
Col./Ftg. 50W-5	50W5-1	Str.	11	15	22	10	Col.-Vertical		
	" -2	22	11	15	10	3	Ftg. & Col. (Dowel)	8	4
	" -3	T3	5	1	14	10	Ftg. Hoop	4	1¼
	" -4	T5	4	1	324	8	Col. Spiral (25.50 Turns) *	4	1
	" -5	(1)	8	12	12	8	Ftg. Trans.	10	6
	" -6	(1)	8	17	14	8	Ftg. Long.	12	6
	" -7	(17A)	4	5	4	0	Mas. Pt. Brg. Bar -Trans.	2	4
	" -8	(17A)	4	5	4	0	" -Long.	2	4

	Mark	Type	Size	No. Req.	Length Ft.	Length In.	Location	a Ft.	a In.
Col./Ftg. 50E-2	50E2-1	Str.	11	18	23	10	Col.-Vertical		
	" -2	22	11	18	10	9	Ftg. & Col. (Dowel)	8	10
	" -3	T3	5	1	16	5	Ftg. Hoop	4	7¼
	" -4	T5	4	1	379	0	Col. Spiral (26.50 Turns) *	4	7
	" -5	(1)	8	13	13	8	Ftg. Trans.	11	6
	" -6	(1)	8	18	16	8	Ftg. Long.	14	6
	" -7	(17A)	4	5	4	2	Mas. Pt. Brg. Bar -Trans.	2	6
	" -8	(17A)	4	5	4	2	" -Long.	2	6

	Mark	Type	Size	No. Req.	Length Ft.	Length In.	Location	a Ft.	a In.
Col./Ftg. 50E-4	50E4-1	Str.	11	18	25	1	Col.-Vertical		
	" -2	22	11	18	10	9	Ftg. & Col. (Dowel)	8	10
	" -3	T3	5	1	16	5	Ftg. Hoop	4	7¼
	" -4	T5	4	1	396	10	Col. Spiral (27.75 Turns) *	4	7
	" -5	(1)	8	13	13	8	Ftg. Trans.	11	6
	" -6	(1)	8	18	16	8	Ftg. Long.	14	6
	" -7	(17A)	4	5	4	2	Mas. Pt. Brg. Bar -Trans.	2	6
	" -8	(17A)	4	5	4	2	" -Long.	2	6

	Mark	Type	Size	No. Req.	Length Ft.	Length In.	Location	a Ft.	a In.
Col./Ftg. 51W-1	51W1-1	Str.	11	12	22	1	Col.-Vertical		
	" -2	22	11	12	9	9	Ftg. & Col. (Dowel)	7	10
	" -3	T3	5	1	13	3	Ftg. Hoop	3	7¼
	" -4	T5	4	1	276	5	Col. Spiral (24.75 Turns) *	3	7
	" -5	(1)	7	13	10	3	Ftg. Trans.	8	6
	" -6	(1)	7	13	10	3	Ftg. Long.	8	6
	" -7	(17A)	4	5	4	8	Mas. Pt. Brg. Bar -Trans.	3	0
	" -8	(17A)	4	5	4	0	" -Long.	2	4

	Mark	Type	Size	No. Req.	Length Ft.	Length In.	Location	a Ft.	a In.
Col./Ftg. 51W-3	51W3-1	Str.	11	12	21	10	Col.-Vertical		
	" -2	22	11	12	9	9	Ftg. & Col. (Dowel)	7	10
	" -3	T3	5	1	13	3	Ftg. Hoop	3	7¼
	" -4	T5	4	1	273	7	Col. Spiral (24.50 Turns) *	3	7
	" -5	(1)	6	13	10	0	Ftg. Trans.	8	6
	" -6	(1)	6	13	10	0	Ftg. Long.	8	6
	" -7	(17A)	4	5	4	8	Mas. Pt. Brg. Bar -Trans.	3	0
	" -8	(17A)	4	5	4	0	" -Long.	2	4

	Mark	Type	Size	No. Req.	Length Ft.	Length In.	Location	a Ft.	a In.
Col./Ftg. 51W-5	51W5-1	Str.	11	12	21	10	Col.-Vertical		
	" -2	22	11	12	9	9	Ftg. & Col. (Dowel)	7	10
	" -3	T3	5	1	13	3	Ftg. Hoop	3	7¼
	" -4	T5	4	1	273	7	Col. Spiral (24.50 Turns) *	3	7
	" -5	(1)	7	11	10	3	Ftg. Trans.	8	6
	" -6	(1)	7	11	10	3	Ftg. Long.	8	6
	" -7	(17A)	4	5	4	8	Mas. Pt. Brg. Bar -Trans.	3	0
	" -8	(17A)	4	5	4	0	" -Long.	2	4

	Mark	Type	Size	No. Req.	Length Ft.	Length In.	Location	a Ft.	a In.
Col./Ftg. 51E-2	51E2-1	Str.	11	12	22	1	Col.-Vertical		
	" -2	22	11	12	9	9	Ftg. & Col. (Dowel)	7	10
	" -3	T3	5	1	13	3	Ftg. Hoop	3	7¼
	" -4	T5	4	1	276	5	Col. Spiral (24.75 Turns) *	3	7
	" -5	(1)	7	10	10	3	Ftg. Trans.	8	6
	" -6	(1)	7	10	10	3	Ftg. Long.	8	6
	" -7	(17A)	4	5	4	8	Mas. Pt. Brg. Bar -Trans	3	0
	" -8	(17A)	4	5	4	0	" -Long	2	4

* No. of turns @ 12" pitch plus 1½ turns at each end required for the column. Size 4 Spiral equals size W20 wire.

SHEET A53

SUBSTRUCTURE
BILL OF REINFORCEMENT

COMMONWEALTH OF KENTUCKY
DEPARTMENT OF HIGHWAYS
FRANKFORT
COUNTY OF
JEFFERSON

I 64-13TH ST. TO 7TH ST.
LOUISVILLE — LEXINGTON ROAD

SP 56-273-11L

STATION 208+08 **P. E. PROJECT NO.** I 64-2 (35) 3

CONSTRUCTION PROJECT NO.	MAINTENANCE PROJECT NO.	DRAWING NO.
		18572

LETTITG DATE

DATE DATE DATE

REVISED DATE REVISED DATE 5-71 REVISED DATE

DESIGNED BY CHECKED BY
DETAILED BY CBE CHECKED BY
TRACED BY CHECKED BY

BILL OF REINFORCEMENT - COL./FTG. & MONOLITH UNITS

	Mark	Type	Size	No. Req.	Length Ft.	Length In.	Location	a Ft.	a In.
Col./Ftg. 51E-4	51E4 - 1	Str.	11	12	22	4	Col.-Vertical		
	" -2	22	11	12	9	9	Ftg. & Col. (Dowel)	7	10
	" -3	T3	5	1	13	3	Ftg. Hoop	3	7¼
	" -4	T5	4	1	279	2	Col. Spiral (25.00 Turns) *	3	7
	" -5	(1)	7	10	10	3	Ftg. Trans.	8	6
	" -6	(1)	7	10	10	3	Ftg. Long.	8	6
	" -7	(17A)	4	5	4	8	Mas. Pt. Brg. Bar - Trans.	3	0
	" -8	(17A)	4	5	4	0	" - Long.	2	4

	Mark	Type	Size	No. Req.	Length Ft.	Length In.	Location	a Ft.	a In.
Col./Ftg. 39W-1	39W - 1	Str.	10	22	18	7	Col.-Vertical		
	" -2	22	11	22	10	9	Ftg. & Col. (Dowel)	8	10
	" -3	T3	5	1	14	10	Ftg. Hoop	4	1¼
	" -4	T5	4	1	270	7	Col. Spiral (21.25 Turns) *	4	1
	" -5	(17A)	4	5	4	4	Mas. Pt. Brg. Bar - Trans.	2	8
	" -6	(17A)	4	5	4	4	" - Long.	2	8
	" -7	(1)	11	42	20	4	Ftg. Long. - Bottom	17	6
	" -8	Str.	7	14	17	6	Ftg. Long. - Top		
	" -9	(1)	8	12	22	8	Ftg. Trans. - Bottom	20	6
	" -10	Str.	11	18	20	6	Ftg. Trans. - Top		
	" -11	22	11	60	10	9	Ftg. & Col. (Dowel)	8	10
	" -12	T3	5	1	19	9	Ftg. Hoop	5	8

	Mark	Type	Size	No. Req.	Length Ft.	Length In.	Location	a Ft.	a In.
Col./Strap Ftg. 37W	37W1 - 1	Str.	11	18	22	7	Col.-Vertical		
	" -2	22	11	18	10	9	Ftg. & Col. (Dowel)	8	10
	" -3	T3	5	1	16	5	Ftg. Hoop	4	7¼
	" -4	T5	4	1	361	1	Col. Spiral (25.25 Turns) *	4	7
	" -5	(17A)	4	6	4	2	Mas. Pt. Brg. Bar - Trans.	2	6
	" -6	(17A)	4	5	4	2	" - Long.	2	6
	37W3 -1	Str.	11	18	21	3	Col.-Vertical		
	" -2	22	11	18	10	9	Ftg. & Col. (Dowel)	8	10
	" -3	T3	5	1	16	5	Ftg. Hoop	4	7¼
	" -4	T5	4	1	343	2	Col. Spiral (24.00 Turns) *	4	7
	" -5	(17A)	4	6	4	2	Mas. Pt. Brg. Bar - Trans.	2	6
	" -6	(17A)	4	5	4	2	" - Long.	2	6
	37W -7	Str.	4	23	8	7	Ftg. - Top		
	" -8	Str.	8	18	33	6	Ftg. - Top		
	" -9	(1)	6	38	10	0	Ftg. - Bottom	8	6
	" -10	Str.	6	9	33	6	Ftg. - Bottom		

	Mark	Type	Size	No. Req.	Length Ft.	Length In.	Location	a Ft.	a In.
Col./Strap Ftg. R3-1	R3-1A -1	Str.	11	18	24	2	Col.-Vertical		
	" -2	22	11	18	10	9	Ftg. & Col. (Dowel)	8	10
	" -3	T3	5	1	16	5	Ftg. Hoop	4	7¼
	" -4	T5	4	1	386	1	Col. Spiral (27.00 Turns) *	4	7
	" -5	(17A)	4	6	4	2	Mas. Pt. Brg. Bar - Trans.	2	6
	" -6	(17A)	4	5	4	2	" - Long.	2	6
	R3-1B - 1	Str.	11	18	23	1	Col.-Vertical		
	" -2	22	11	18	10	9	Ftg. & Col. (Dowel)	8	10
	" -3	T3	5	1	16	5	Ftg. Hoop	4	7¼
	" -4	T5	4	1	368	3	Col. Spiral (25.75 Turns) *	4	7
	" -5	(17A)	4	6	4	4	Mas. Pt. Brg. Bar - Trans.	2	8
	" -6	(17A)	4	5	4	4	" - Long.	2	8
	R3 -7	Str.	8	2	22	4	Ftg. Top		
	" -8	Str.	8	2	22	7	Ftg. Top		
	" -9	Str.	8	2	22	11	Ftg. Top		
	" -10	Str.	8	2	23	2	Ftg. Top		
	" -11	Str.	8	2	23	6	Ftg. Top		
	" -12	Str.	8	2	23	9	Ftg. Top		
	" -13	Str.	8	2	24	1	Ftg. Top		
	" -14	Str.	8	2	24	4	Ftg. Top		
	" -15	Str.	8	2	24	8	Ftg. Top		
	" -16	Str.	6	2	22	4	Ftg. Bottom		
	" -17	Str.	6	2	22	11	Ftg. Bottom		
	" -18	Str.	6	2	23	6	Ftg. Bottom		
	" -19	Str.	6	2	24	1	Ftg. Bottom		
	" -20	Str.	6	1	24	6	Ftg. Bottom		
	" -21	Str.	4	13	8	6	Ftg. Top		
	" 22	Str.	6	2	5	0	Ftg. Bottom		
	" 23	Str.	6	2	6	8	Ftg. Bottom		
	" 24	(1)	6	25	10	0	Ftg. Bottom	8	6
	" 25	Str.	4	2	5	0	Ftg. Top		
	" 26	Str.	4	2	1	6	Ftg. Top		

	Mark	Type	Size	No. Req.	Length Ft.	Length In.	Location	a Ft.	a In.
Col./Strap Ftg. 45E	45E2-1	Str.	11	18	25	10	Col.-Vertical		
	" -2	22	11	18	10	9	Ftg. & Col. (Dowel)	8	10
	" -3	T3	5	1	16	5	Ftg. Hoop	4	7¼
	" -4	T5	4	1	407	7	Col. Spiral (28.50 Turns) *	4	7
	" -5	(17A)	4	6	4	6	Mas. Pt. Brg. Bar - Trans.	2	10
	" -6	(17A)	4	5	4	6	" - Long.	2	10
	45E4- 1	Str.	11	18	27	1	Col.-Vertical		
	" -2	22	11	18	10	9	Ftg. & Col. (Dowel)	8	10
	" -3	T3	5	1	16	5	Ftg. Hoop	4	7¼
	" -4	T5	4	1	425	5	Col. Spiral (29.75 Turns) *	4	7
	" -5	(17A)	4	6	4	6	Mas. Pt. Brg. Bar - Trans.	2	10
	" -6	(17A)	4	5	4	6	" - Long.	2	10
	45E - 7	Str.	8	2	28	11	Ftg. Top		
	" -8	Str.	8	2	29	1	Ftg. Top		
	" -9	Str.	8	2	29	4	Ftg. Top		
	" -10	Str.	8	2	29	6	Ftg. Top		
	" -11	Str.	8	2	29	8	Ftg. Top		
	" -12	Str.	8	2	29	10	Ftg. Top		
	" -13	Str.	8	2	30	0	Ftg. Top		
	" -14	Str.	8	2	30	3	Ftg. Top		
	" -15	Str.	8	2	30	5	Ftg. Top		
	" -16	Str.	6	2	29	0	Ftg. Bottom		
	" -17	Str.	6	2	29	4	Ftg. Bottom		
	" -18	Str.	6	2	29	9	Ftg. Bottom		
	" -19	Str.	6	2	30	1	Ftg. Bottom		
	" -20	Str.	6	1	30	6	Ftg. Bottom		
	" -21	Str.	4	2	5	3	Ftg. Top		
	" -22	Str.	4	19	8	6	Ftg. Top		
	" -23	Str.	6	2	5	3	Ftg. Bottom		
	" -24	(1)	6	2	8	0	Ftg. Bottom	6	6
	" -25	(1)	6	2	9	3	Ftg. Bottom	7	9
	" -26	(1)	6	43	10	0	Ftg. Bottom	8	6

	Mark	Type	Size	No. Req.	Length Ft.	Length In.	Location	a Ft.	a In.	b Ft.	b In.	c Ft.	c In.
Monolith 1 RC	1RC - 1	Str.	8	22	32	11	Ftg. Bottom						
	" -2	Str.	6	16	32	11	Ftg. Top						
	" -3	Str.	8	67	20	0	Ftg. Top						
	" -4	29	11	34	30	0	Ftg. Bottom	28	7				
	" -5	22A	4	34	6	0	Ftg. Bottom	3	0	3	0		
	" -6	21	5	23	27	1	Floodwall Stem	18	9	8	4	2	7½
	" -7	29	11	23	28	1	Floodwall Stem	26	8				
	" -8	29	11	22	16	4	Floodwall Stem	14	11				
	" -9	59	4	124	4	3	Rem. Strip						
	" -10	62	4	84	6	2	Rem. Strip	2	5	1	6¼		
	" -11	Str.	4	16	22	3	Rem. Strip						
	" -12	Str.	4	12	16	10	Rem. Strip						
	" -13	Str.	4	16	12	4	Rem. Strip						
	" -14	Str.	5	54	32	11	Floodwall Stem						
	" -15	Str.	11	15	11	0	Ftg. Bottom						
	" -16	Str.	5	34	29	8	Pier Wall						
	" -17	Str.	5	2	15	6	Pier Wall						
	" -18	Str.	11	28	24	7	Pier Wall						
	" -19	Str.	11	20	26	1	Pier Wall						
	" -20	Str.	11	8	21	6	Pier Wall						
	" -21	Str.	5	10	15	6	Pier Cap						
	" -22	Str.	5	10	16	0	Pier Cap						
	" -23	T2	4	30	13	1	Pier Cap	2	7	3	7		
	" -24	17	4	6	5	10	Brg. Blk.	2	7	1	8		
	" -25	17	5	35	5	7	Pier Wall	1	6	2	1		
	" -26	17	5	8	6	7	Pier Cap	2	6	2	1		

* No. of turns @ 12" pitch plus 1½ turns at each end required for the column.
Size 4 Spiral equals size W20 wire.

SUBSTRUCTURE
BILL OF REINFORCEMENT

SHEET A54

COMMONWEALTH OF KENTUCKY
DEPARTMENT OF HIGHWAYS
FRANKFORT
COUNTY OF
JEFFERSON
I64-13TH ST. TO 7TH ST.
LOUISVILLE — LEXINGTON ROAD
SP 56-273-11L
STATION 208+08
P. E. PROJECT NO. I 64-2 (35) 3

CONSTRUCTION PROJECT NO.	MAINTENANCE PROJECT NO.	DRAWING NO.
		18572

LETTITG DATE

DESIGNED BY
DETAILED BY 68F
TRACED BY
CHECKED BY
CHECKED BY B.W.L.
CHECKED BY
DATE
DATE 5-71
DATE
REVISED
REVISED
REVISED

BILL OF REINFORCEMENT - MONOLITH UNITS

Monolith 111

Mark	Type	Size	No. Req.	Length Ft.	Length In.	Location	a Ft.	a In.	b Ft.	b In.	c Ft.	c In.
111M-1	29	11	22	29	11	Ftg. Bott.	28	6				
" -2	Str.	6	19	19	6	Ftg.						
" -3	Str.	8	40	20	0	Ftg. Top						
" -4	21	5	11	27	0	Wall	18	9	8	3	2	4½
" -5	29	11	11	28	1	Wall	26	8				
" -6	29	11	11	16	4	Wall	14	11				
" -7	Str.	5	52	19	6	Wall						
" -8	T2	4	22	15	5	Pedestal	3	7	3	9		
" -9	59	4	124	4	3	Rem. Strip						
" -10	62	4	84	6	2	Rem. Strip	2	5	1	6¼		
" -11	Str.	4	16	22	5	Rem. Strip						
" -12	Str.	4	12	16	6	Rem. Strip						
" -13	Str.	4	16	12	1	Rem. Strip						
" -14	Str.	11	8	25	9	Pedestal						
" -15	Str.	11	8	26	8	Pedestal						
" -16	17	4	1	7	11	Pedestal	3	7	2	2		
" -17	Str.	5	2	8	11	Pedestal						
" -18	Str.	5	2	7	3	Pedestal						
" -19	22A	4	21	6	0	Ftg.	3	0	3	0		
" -20	17	4	4	6	1	Pedestal	3	8	1	3		
" -21	17	4	5	5	11	Pedestal	3	6	1	3		

Monolith 102

Mark	Type	Size	No. Req.	Length Ft.	Length In.	Location	a Ft.	a In.	b Ft.	b In.	c Ft.	c In.
102M-1	Str.	6	36	19	6	Ftg.						
" -2	Str.	8	40	30	6	Ftg. Top						
" -3	29	10	24	31	10	Ftg. Bott.	30	6				
" -4	22A	4	21	6	0	Ftg.	3	0	3	0		
" -5	21	5	14	27	7	Wall	18	9	8	10	2	7½
" -6	29	11	16	16	10	Wall	15	5				
" -7	29	11	15	28	7	Wall	27	2				
" -8	Str.	5	60	19	7	Wall						
" -9	59	4	122	4	3	Rem. Strip						
" -10	62	4	84	6	2	Rem. Strip	2	5	1	6¼		
" -11	Str.	4	16	23	9	Rem. Strip						
" -12	Str.	4	12	17	11	Rem. Strip						
" -13	Str.	4	16	13	3	Rem. Strip						
" -14	T3	5	1	14	10	Ftg. Hoop	4	1¼				
" -15	22	11	15	9	9	Ftg. & Col. Dowel	7	10				
" -16	Str.	11	15	24	1	Col. Vertical						
" -17	T5	4	1	343	10	Col. Spiral (27.00 Turns)*	4	1				
" -18	17A	4	5	4	0	Mas. & Brg. Bar - Trans.	2	4				
" -19	17A	4	5	4	0	Mas. & Brg. Bar - Long.	2	4				

Monolith 106

Mark	Type	Size	No. Req.	Length Ft.	Length In.	Location	a Ft.	a In.	b Ft.	b In.	c Ft.	c In.
106M-1	Str.	11	33	19	6	Ftg. Bott.						
" -2	Str.	6	17	19	6	Ftg. Top						
" -3	Str.	8	41	20	8	Ftg. Top						
" -4	29	11	21	31	9	Ftg. Bott.	30	4				
" -5	22A	4	21	6	0	Ftg.	3	0	3	0		
" -6	21	5	10	28	9	Floodwall Stem	18	9	10	0	2	9
" -7	29	11	11	29	7	Floodwall Stem	28	2				
" -8	29	11	9	17	7	Floodwall Stem	16	2				
" -9	59	4	107	4	3	Rem. Strip						
" -10	62	4	68	6	2	Rem. Strip	2	5	1	6¼		
" -11	Str.	4	16	23	11	Rem. Strip						
" -12	Str.	4	14	17	6	Rem. Strip						
" -13	Str.	4	18	12	6	Rem. Strip						
" -14	Str.	5	50	19	6	Floodwall Stem						
" -15	Str.	5	10	6	0	Floodwall Stem						
" -16	Str.	11	52	25	0	G1 & G2 Wall						
" -17	T2	4	15	13	7	G2 Cap	2	10	3	7		
" -18	Str.	11	8	20	8	G2 Cap						
" -19	Str.	5	40	14	6	G1 Wall						
" -20	Str.	5	40	15	3	G2 Wall						
" -21	T2	4	14	12	11	G1 Cap	2	6	3	7		
" -22	Str.	5	9	13	0	G1 Cap						
" -23	Str.	5	9	13	10	G2 Cap						
" -24	Str.	5	10	7	0	Floodwall Stem						
" -25	Str.	6	18	2	6	Dowels						
" -26	Str.	11	48	28	2	Col. Base						
" -27	17	4	48	14	8	Col. Base	6	7	4	1		
" -28	17	4	6	5	9	Brg. Blk. G1	2	6	1	8		
" -29	17	4	5	6	5	Brg. Blk. G1	3	2	1	8		
" -30	17	4	12	6	1	Brg. Blk. G2	2	10	1	8		
" -31	17	5	20	5	5	G1 Wall	1	4¼	2	1		
" -32	17	5	20	6	2	G2 Wall	2	1¼	2	1		
" -33	17	5	4	6	6	G1 Cap	2	5	2	1		
" -34	17	5	4	6	9	G2 Cap	2	8	2	1		
" -35	T3	5	3	20	2	Ftg. Hoop	5	10½				
" -36	Str.	11	60	11	3	Col. Dowel						
" -37	62	4	15	7	8	Rem. Strip Mono. 106D	3	2	2	3¾		
" -38	64	4	13	5	9	Rem. Strip Mono. 107	0	11¼	1	8		
" -39	Str.	4	4	23	2	Rem. Strip Mono. 107						

Monolith 98

Mark	Type	Size	No. Req.	Length Ft.	Length In.	Location	a Ft.	a In.	b Ft.	b In.	c Ft.	c In.
98M-1	Str.	6	36	19	6	Ftg.						
" -2	Str.	8	40	29	6	Ftg. Top						
" -3	29	10	24	30	10	Ftg. Bott.	29	6				
" -4	22A	4	21	6	0	Ftg.	3	0	3	0		
" -5	21	5	14	26	10	Wall	18	9	8	0½	2	5
" -6	29	11	16	27	10	Wall	26	5				
" -7	29	11	15	16	1	Wall	14	8				
" -8	Str.	5	54	19	7	Wall						
" -9	59	4	72	4	3	Rem. Strip						
" -10	62	4	78	6	2	Rem. Strip	2	5	1	6¼		
" -11	Str.	4	12	23	0	Rem. Strip						
" -12	Str.	4	14	17	11	Rem. Strip						
" -13	Str.	4	18	12	8	Rem. Strip						
" -14	Str.	4	4	23	9	Rem. Strip						
" -15	64	4	15	6	1	Rem. Strip	0	11¼	1	10		
" -16	64	4	9	5	9	Rem. Strip	0	9¾	1	8		
" -17	62	4	4	7	8	Rem. Strip	3	2	2	3¼		
" -20	22	11	12	9	9	Ftg. & Col. Dowel	7	10				
" -21	T3	5	1	13	3	Ftg. Hoop	3	7¼				
" -22	Str.	11	12	24	3	Col. Vertical						
" -23	T5	4	1	301	6	Col. Spiral (27.00 Turns)*	3	7				
" -24	17A	4	3	4	4	Mas. & Brg. Bar - Trans.	2	8				
" -25	17A	4	5	3	8	Mas. & Brg. Bar - Long.	2	0				

Closure 2RC

Mark	Type	Size	No. Req.	Length Ft.	Length In.	Location	a Ft.	a In.	b Ft.	b In.	c Ft.	c In.
2RC-1	1	6	22	21	4	Wall	19	10				
" -2	Str	6	29	14	0	Wall						
" -3	Str	6	2	19	10	Wall						
" -4	Str	4	47	22	2	Wall						
" -5	Str	4	4	21	8	Wall						
" -6	Str	4	5	20	9	Wall						
" -7	Str	4	10	15	6	Wall						
" -8	17	4	4	20	8	Wall	1	9	9	6		
" -9	17	4	3	17	6	Wall	1	9	7	11		
" -10	17	4	4	15	2	Wall	1	9	6	9		
" -11	17	4	3	12	0	Wall	1	9	5	2		
" -12	17	4	4	9	6	Wall	1	9	3	11		
" -13	17	4	3	6	4	Wall	1	9	2	4		
" -14	17	6	2	6	11	Wall	1	0	3	0		
" -15	17	4	21	10	8	Wall	1	9	4	6		
" -16	Str	4	2	4	9	Wall						

* No. of turns @ 12" pitch plus 1½ turns at each end required for the column.
Size 4 Spiral equals size W20 wire.

SUBSTRUCTURE
BILL OF REINFORCEMENT

SHEET A55

COMMONWEALTH OF KENTUCKY
DEPARTMENT OF HIGHWAYS
FRANKFORT
COUNTY OF
JEFFERSON
I64-13TH ST. TO 7TH ST.
LOUISVILLE — LEXINGTON
ROAD SP 56-273-11L
STATION 208+08 **P. E. PROJECT NO.** I 64-2(35) 3

CONSTRUCTION PROJECT NO.	MAINTENANCE PROJECT NO.	DRAWING NO.
		18572

LETTING DATE

DESIGNED BY ____ CHECKED BY Birk DATE ____ REVISED ____
DETAILED BY CBF CHECKED BY ____ DATE 5-71 REVISED ____
TRACED BY ____ CHECKED BY ____ DATE ____ REVISED ____

FED. ROAD DIST.	STATE	FED. AID PROJ. NO.	FISCAL YEAR	SHEET NO.	TOTAL SHEETS
7	KY.				

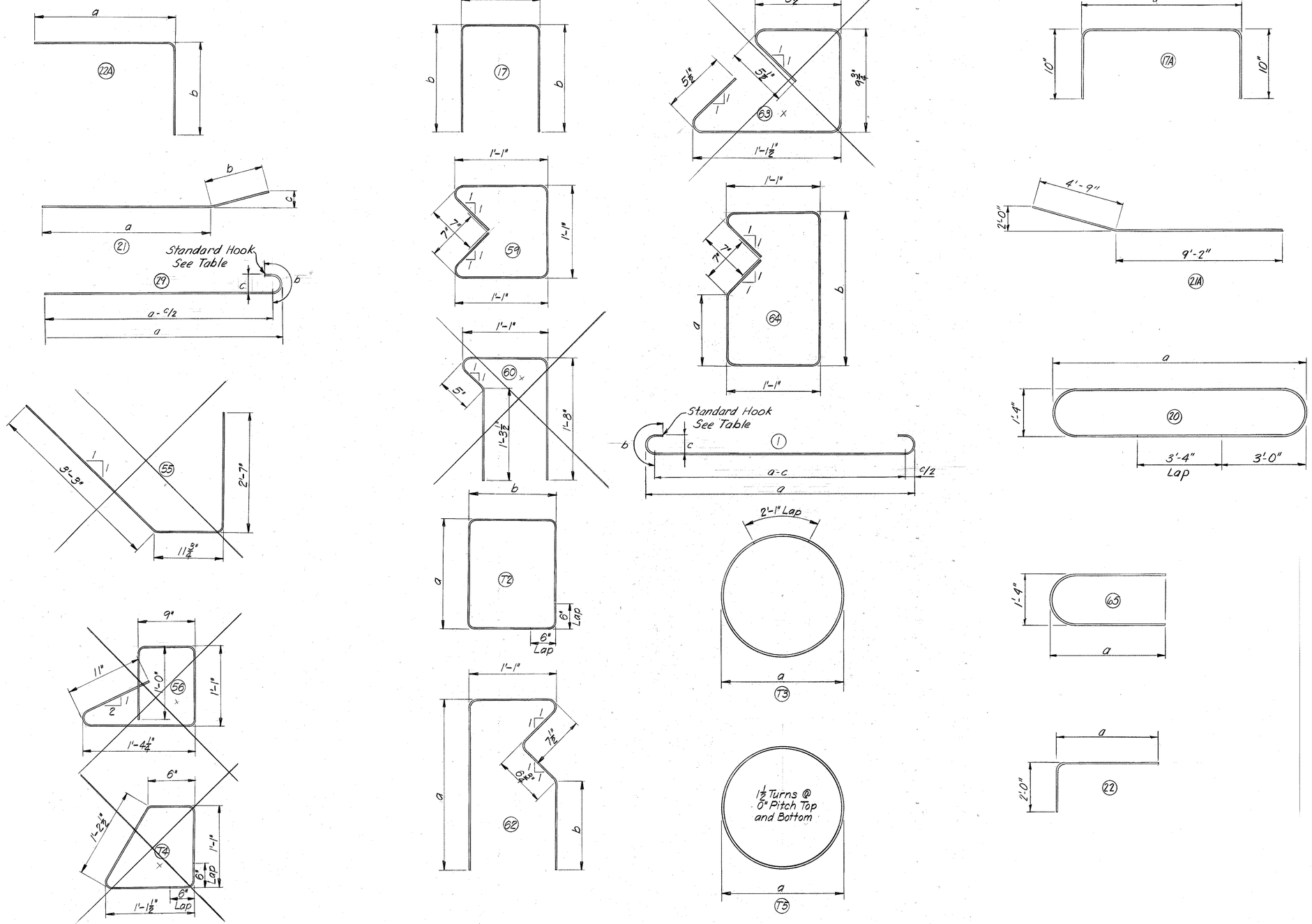

STANDARD HOOK TABLE		
Bar Size	Length "b"	Standard "c"
# 4	8"	4"
# 5	10"	5"
# 6	12"	6"
# 7	1'-2"	7"
# 8	1'-6"	8"
# 9	1'-8"	11¼"
# 10	1'-10"	1'-0¾"
# 11	2'-0"	1'-2¼"

SUBSTRUCTURE
BAR BENDING DETAILS

SHEET A56

COMMONWEALTH OF KENTUCKY
DEPARTMENT OF HIGHWAYS
FRANKFORT
COUNTY OF
JEFFERSON

I64-13TH ST. TO 7TH ST.
LOUISVILLE—LEXINGTON ROAD

SP 56-273-11L

STATION 208+08 PROJECT NO. I 64-2(35)3

BRIDGE NUMBER	DRAWING NO.	INDEX
	18572	

DESIGNED BY PME CHECKED BY DATE REVISED
DETAILED BY CHECKED BY DATE REVISED
TRACED BY CHECKED BY DATE REVISED

ESTIMATE OF QUANTITIES **

FOOTING NUMBER	Concrete Class "A" Cu. Yds.	Steel Reinf. Lbs.	Piles 12 BP 53 Lin. Ft.		Piles Options A thru F Lin. Ft		Structure Excavation Common Cu. Yds.	Placing Piles Thru Fill			
								Method A & Under Floodwall			Method B Cu. Yds.
								Preboring			
								Cat. A Lin. Ft.	Cat. B Lin. Ft.	Cat. C Lin. Ft.	
			Furn.	Driven	Furn.	Driven					
26W-G1	34.6	4546	232	232			41				
26W-G3	34.3	4496	232	232			41				
26E-G2	34.8	4167	242	242			41				
26E-G4	35.2	4234	232	232			44				
27W-G1	41.4	4563	261	261			53				
27W-G3	41.1	4519	261	261			55				
27E-G2	41.4	5149	300	300			57				
27E-G4	41.8	5223	290	290			60				
28W-G1	33.7	3979	256	256			43				
28W-G3	33.1	3891	288	288			40				
28E-G2	30.4	3728	202	202			37				
28E-G4	30.4	3728	198	198			35				
29W-G1	24.6	3236	288	288			32				
29W-G3	24.9	3282	315	315			35				
29E-G2	24.5	3638	306	306			32				
29E-G4	27.4	3863	333	333			40				
30W-1	56.1	6709	602	602			81				
30W-G3	39.9	4981	324	324			59				
30E-G4	39.2	6833	429	429			56				
31W-G3	31.8	3749	296	296			44				
31E-2	60.4	6077	417	417			90				
31E-G4	32.4	3829	296	296			44				
32W-G1	31.7	3729	325	325			44				
32W-3	59.9	6451	510	510			89				
32E-G2	23.9	2949	288	288			32				
32E-G4	24.3	3013	280	280			33				
33W-G1	39.3	4922	298	298			53				
33W-G3	34.7	4035	297	297			47				
33W-G5	34.4	3992	297	297			51				
33E-G2	24.3	2918	204	204			33				
33E-G4	24.9	3007	198	198			32				
34W-G1	33.9	4122	180	180			40				
34W-G3	33.0	3990	196	196			37				
R1-17A	34.6	4195	186	186			37				
R1-17B	33.5	4040	192	192			37	*60	*60	*30	*815
34E-G2	52.6	5914	372	372			71				
34E-G4	53.2	6103	372	372			70				
35W-G1	34.9	4057	280	280			47				
35W-G3	34.0	3925	279	279			46				
35E-G2	52.5	6500	330	330			77				
35E-G4	53.3	6630	330	330			77				
36W-G1	22.9	2735	245	245			33				
36W-G3	22.2	2628	255	255			33				
36E-G2	23.9	2897	192	192			32				
36E-G4	24.5	2840	128	128			33				
36E-G6	24.8	3091	208	208			33				
37W	88.8	9580	504	504			125			28	
37E-G2	33.8	3903	315	315			47				
37E-G4	35.3	4123	343	343			46				
37E-G6	36.2	4257	333	333			47				
38W-G1	21.1	2541	336	336			33				
38W-G3	20.5	2408	346	346			32				
38E-G2	22.9	2705	280	280			32				
38E-G4	24.3	2918	290	290			33				
38E-G6	24.7	3023	280	280			32			11	
39W-G1	81.1	14413			1204	1204	133				
39W-G3	34.4	3484			483	483	55				
R3-1	74.4	9113			533	533	84			209	

ESTIMATE OF QUANTITIES **

FOOTING NUMBER	Concrete Class "A" Cu. Yds.	Steel Reinf. Lbs.	Piles 12 BP 53 Lin. Ft.		Piles Options A thru F Lin. Ft.		Structure Excavation Common Cu. Yds.	Placing Piles Thru Fill			
								Method A & Under Floodwall			Method B Cu. Yds.
								Preboring			
								Cat. A Lin. Ft.	Cat. B Lin. Ft.	Cat. C Lin. Ft.	
			Furn.	Driven	Furn.	Driven					
39E-G2	29.9	3522			273	273	38				
39E-G4	31.0	3679			283	283	37				
40W-G1	31.2	3826			440	440	50			271	
40W-G3	21.3	2516			406	406	32				
40E-G2	20.6	2380			336	336	32				
40E-G4	21.2	2431			336	336	33			155	
41W-G3	22.4	2595			308	308	33				
42W-G3	33.6	3676			406	406	48				
42E-G4	22.8	2636			276	276	33				
43W-G3	22.9	2683			360	360	35				
43E-G4	38.0	4447			407	407	53				
44W-G1	24.1	2846			376	376	35			177	
44W-G3	23.7	2775			386	386	35				
44E-G2	38.4	4088			380	380	53			261	
44E-G4	39.5	4243			390	390	55				
45W-G1	35.4	3963			423	423	49				
45W-G3	34.7	3852			423	423	47				
45E	89.0	10429			663	663	102			281	
45E-G6	35.9	4381			228	228	37				
45E-G8	36.5	4460			238	238	38				
46W-G1	24.2	2879			336	336	33				
46W-G3	23.7	2790			346	346	32				
46E-2	24.0	2925			344	344	34				
46E-4	33.9	3799			342	342	51				
46E-6	24.7	3011			306	306	32			217	
47W-G1	34.1	4118			322	322	37				
47W-G3	33.2	3986			322	322	38				
47W-G5	36.5	4461			360	360	38				
47W-G7	36.5	4460			343	343	38				
47E-2	39.3	4176			420	420	57				
47E-4	40.2	4377			407	407	58				
47E-6	40.5	4352			320	320	53				
48E-2	33.8	4082			378	378	52				
48E-4	34.8	4217			380	380	54				
49W-1	23.6	2851			423	423	32				
49W-3	43.6	4479			561	561	59				
49W-5	22.9	2786			460	460	32				
49E-2	38.7	4131			462	462	55				
49E-4	40.4	4374			472	472	59				
50W-1	38.3	4100			414	414	53	*90	*18	*54	*598
50W-3	37.8	4033			450	450	53	*108	*18	*68	*842
50W-5	37.4	3967			460	460	54	*135	*18	*145	*1527
50E-2	50.8	4881			473	473	70	*220	*22	*110	*1598
50E-4	51.7	5012			494	494	70				
51W-1	22.4	2802			386	386	32	*80	*16	*61	*551
51W-3	22.2	2630			408	408	32	*96	*16	*80	*772
51W-5	22.2	2700			400	400	33	*120	*16	*152	*1771
51E-2	22.4	2676			423	423	34	*180	*18	*90	*1378
51E-4	22.5	2694			423	423	32				
TOTAL	3730.5	442,748	16,069	16,069	21,193	21,193	5058	1089	202	2400	9852

*Quantities shown are speculative. Footings other than these shown may contain these quantities. See Special Notes for the method of payment.

** For combined footing & monolith quantities, see Sheet A47. For R.R. Crashwall quantities at footings see Sheet A58.

SUBSTRUCTURE FOOTING & COLUMN ESTIMATE OF QUANTITIES

SHEET A57

COMMONWEALTH OF KENTUCKY
DEPARTMENT OF HIGHWAYS
FRANKFORT
COUNTY OF
JEFFERSON
I64-13TH ST. TO 7TH ST.
LOUISVILLE — LEXINGTON ROAD
STATION 208+08 P.E. PROJECT NO. I 64-2(35)3 SP 56-273-IIL
CONSTRUCTION PROJECT NO. | MAINTENANCE PROJECT NO. | DRAWING NO. 18572

LETTITG DATE

DESIGNED BY CSF CHECKED BY DATE REVISED
DETAILED BY CHECKED BY DATE REVISED
TRACED BY CHECKED BY DATE REVISED

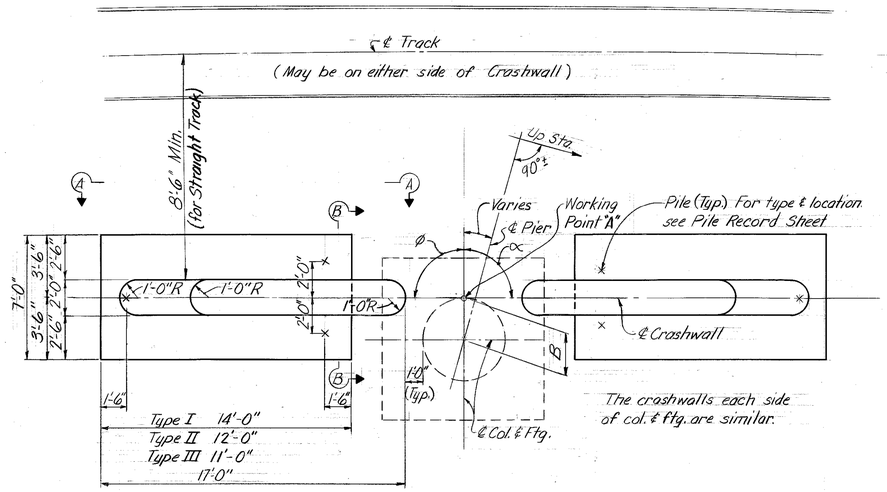

PLAN

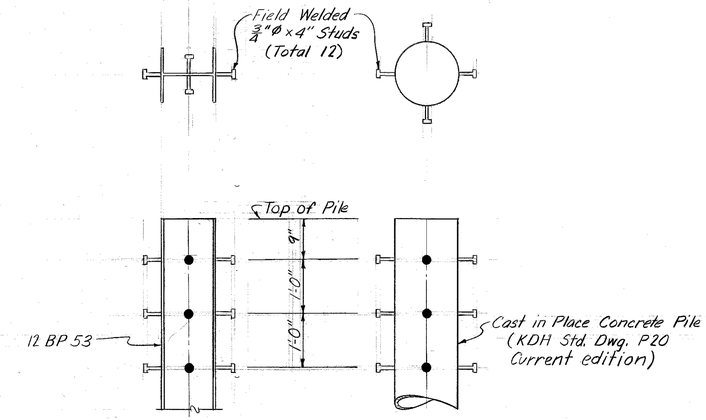

PILE ANCHORAGE DETAILS

(For Type of Pile see Pile Record Sheets)
For Type other than that shown, see Note ②

CRASHWALL DATA

Footing No.	Type	Bott. C.W Ftg. Elev.	ϕ	∝	B
28W-G1	I	441.177	90°	90°	*1'-3"
28E-G2	I	441.842	94°	94°	1'-3"
29W-G3	I	441.002	90°	90°	*1'-0"
29E-G4	I	442.781	↓	↓	*2'-0"
30W-1	III	440.696			*2'-6"
30W-G3	II	440.060			2'-3"
30E-G4	II	442.597			2'-3"
31W-G3	I	440.235			*1'-3"
31E-2	III	440.933			1'-6"
32W-3	III	439.345			2'-6"
34W-G1	I	435.473			*1'-6"
43W-G3	I	435.721			1'-0"
44W-G1	I	436.598			2'-0"
44W-G3	I	436.310			*2'-0"
45W-G1	II	436.722			*1'-3"
47E-2	II	436.662	↓	↓	*2'-3"
48E-4	II	436.407	90°	90°	2'-0"

*Crashwall & R.R. on opposite side from that shown in "Plan" this sheet. See Layout sheets for general location.

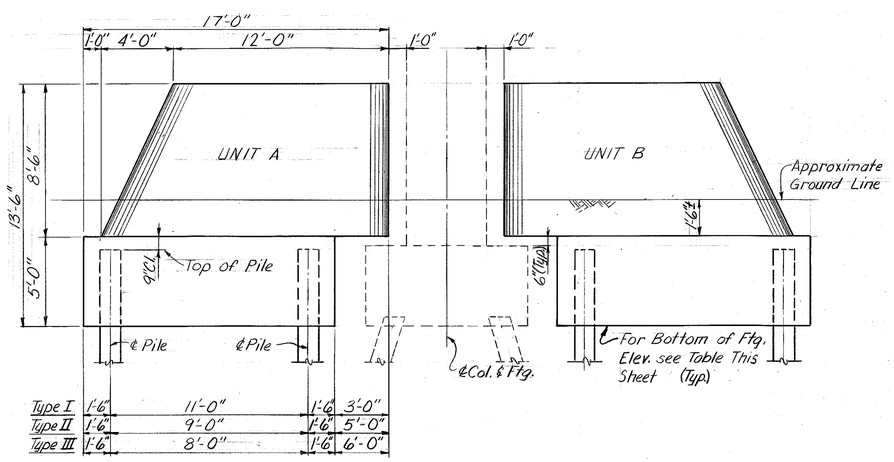

ELEVATION

ESTIMATE of QUANTITES - 1 WALL*					
ITEM Ⓐ	UNIT	AMOUNT			TOTAL
		I	II	III	ALL UNITS
Concrete Class A	Cu. Yd.	26.7	24.1	22.8	858.4
Steel Reinforcement	Lbs.	4999	4484	4226	160,173
Piles, Steel BP 12 @ 53 Furnished	Lin. Ft.	117±	117±	117±	2574
Piles, Steel BP 12 @ 53 Driven	Lin. Ft.	117±	117±	117±	2574
Piles, Options A thru F Furnished	Lin. Ft.	144±	144±	144±	1728
Piles, Options A thru F Driven	Lin. Ft.	144±	144±	144±	1728
Structure Excavation, Common	Cu. Yd.	40±	35±	32±	1262

* These quantities are included in the totals on Sheet No. A3
± Based on average unit.
Ⓐ Category C Prebored Piles:

44W-G1	133 Lin. Ft.
48E-4	27 Lin. Ft.
Total	160 Lin. Ft.

NOTES:

① Location crashwall ℄ relative to the face of column varies. See layout and pile record sheet for exact location for any specific crashwall.

② For piles other than those shown an equivalent anchorage must be provided and approved by the Engineer. The cost of anchorage (all types) shall be incidental to price per lineal ft. of piles furnished.

③ See pile record sheet for type of pile.

Work this Sheet with Sheet No. A59

SUBSTRUCTURE
R.R. CRASHWALL

SHEET A58

COMMONWEALTH OF KENTUCKY
DEPARTMENT OF HIGHWAYS
FRANKFORT
COUNTY OF
JEFFERSON
164-13TH ST. TO 7TH ST.
LOUISVILLE—LEXINGTON ROAD
SP 56-273-11L
STATION 208+08
P. E. PROJECT NO. I 64-2 (35) 3

CONSTRUCTION PROJECT NO.	MAINTENANCE PROJECT NO.	DRAWING NO.
		18572

LETTITG DATE

DESIGNED BY GBF
DETAILED BY
TRACED BY
CHECKED BY ELW
CHECKED BY
CHECKED BY
DATE 5-71
DATE
DATE
REVISED
REVISED
REVISED

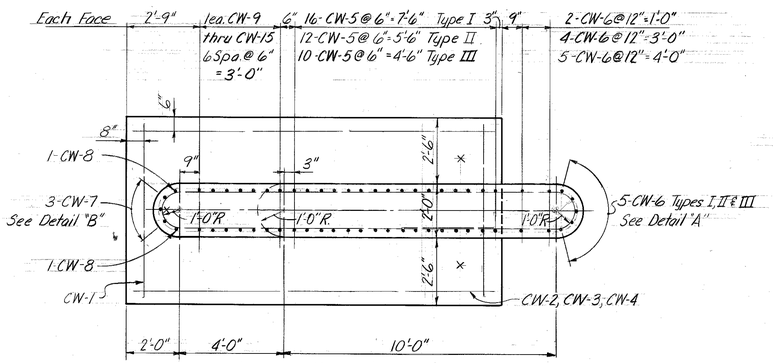

FOOTING PLAN
(Typ. Except as Noted)
UNIT A SHOWN

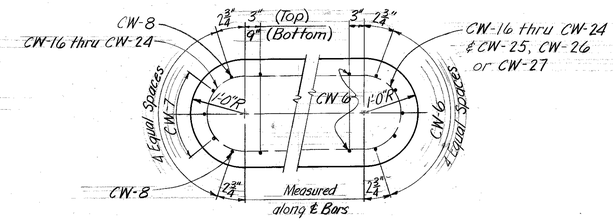

DETAIL "B" DETAIL "A"

CRASHWALL DATA

Mark	** Type	Size	Total No. Req.	Length Ft	Length In	No. Req. Per Unit* I	II	III	Location	a Ft.	a In.
CW-1	Str.	8	808	6	6	26	22	20	Ftg.		
CW-2	Str.	8	216	13	6	12			Ftg.		
CW-3	Str.	8	120	11	6		12		Ftg.		
CW-4	Str.	8	72	10	6			12	Ftg.		
CW-5	Str.	11	936	13	0	32	24	20	Ftg. & Stem		
CW-6	Str.	8	382	8	0	9	13	15	Stem		
CW-7	Str.	6	102	9	2	3	3	3	Stem		
CW-8	21A	11	68	13	11	2	2	2	Stem		
CW-9	Str.	10	68	12	10	2	2	2	Ftg. & Stem		
CW-10	Str.	10	68	12	6	2	2	2	Ftg. & Stem		
CW-11	Str.	9	68	11	4	2	2	2	Ftg. & Stem		
CW-12	Str.	9	68	10	2	2	2	2	Ftg. & Stem		
CW-13	Str.	8	68	9	1	2	2	2	Ftg. & Stem		
CW-14	Str.	8	68	7	11	2	2	2	Ftg. & Stem		
CW-15	Str.	8	68	6	9	2	2	2	Ftg. & Stem		
CW-16	20	8	34	27	8	1	1	1	Stem	11	5
CW-17	20	8	34	28	8	1	1	1	Stem	11	11
CW-18	20	8	34	29	6	1	1	1	Stem	12	4
CW-19	20	8	34	30	6	1	1	1	Stem	12	10
CW-20	20	8	34	31	6	1	1	1	Stem	13	4
CW-21	20	8	34	32	6	1	1	1	Stem	13	10
CW-22	20	8	34	33	4	1	1	1	Stem	14	3
CW-23	20	8	34	34	4	1	1	1	Stem	14	9
CW-24	20	8	34	35	4	1	1	1	Stem	15	3
CW-25	65	8	144	12	11	8			Stem	6	1
CW-26	65	8	80	16	11		8		Stem	8	1
CW-27	65	8	48	18	11			8	Stem	9	1

* Two Units Required per Footing.
9 Type I Footings Req'd.
5 Type II " "
3 Type III " "
** For type details see Sh. A56

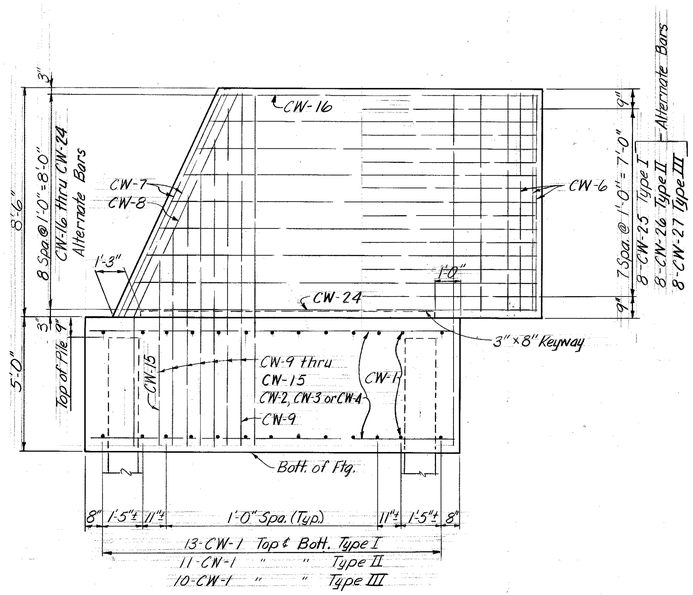

ELEVATION A-A
(Typ. Except as Noted)

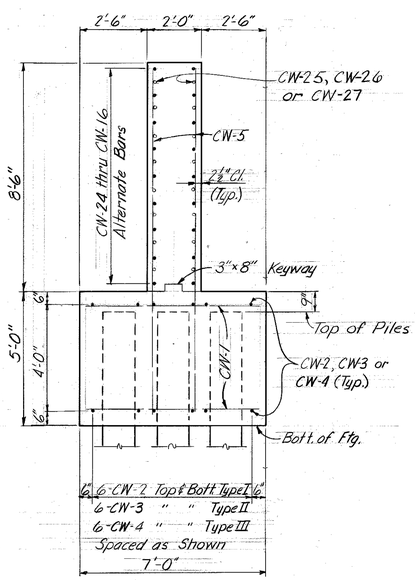

SECTION B-B

NOTE:
Work this Sheet with Sheet No. A58

SHEET A59

SUBSTRUCTURE
R.R. CRASHWALL

COMMONWEALTH OF KENTUCKY
DEPARTMENT OF HIGHWAYS
FRANKFORT
COUNTY OF
JEFFERSON
I64-13TH ST. TO 7TH ST.
LOUISVILLE — LEXINGTON **ROAD**
SP 56-273-11L
STATION 208+08 **P. E. PROJECT NO.** I 64-2 (35) 3

CONSTRUCTION PROJECT NO.	MAINTENANCE PROJECT NO.	DRAWING NO.
		18572

LETTITG DATE

DESIGNED BY CBF DATE
DETAILED BY CBF CHECKED BY FLW DATE 8-71 REVISED
TRACED BY CHECKED BY DATE REVISED
DATE REVISED

FED. ROAD DIST.	STATE	FED. AID PROJ. NO.	FISCAL YEAR	SHEET NO.	TOTAL SHEETS
7	KY.				

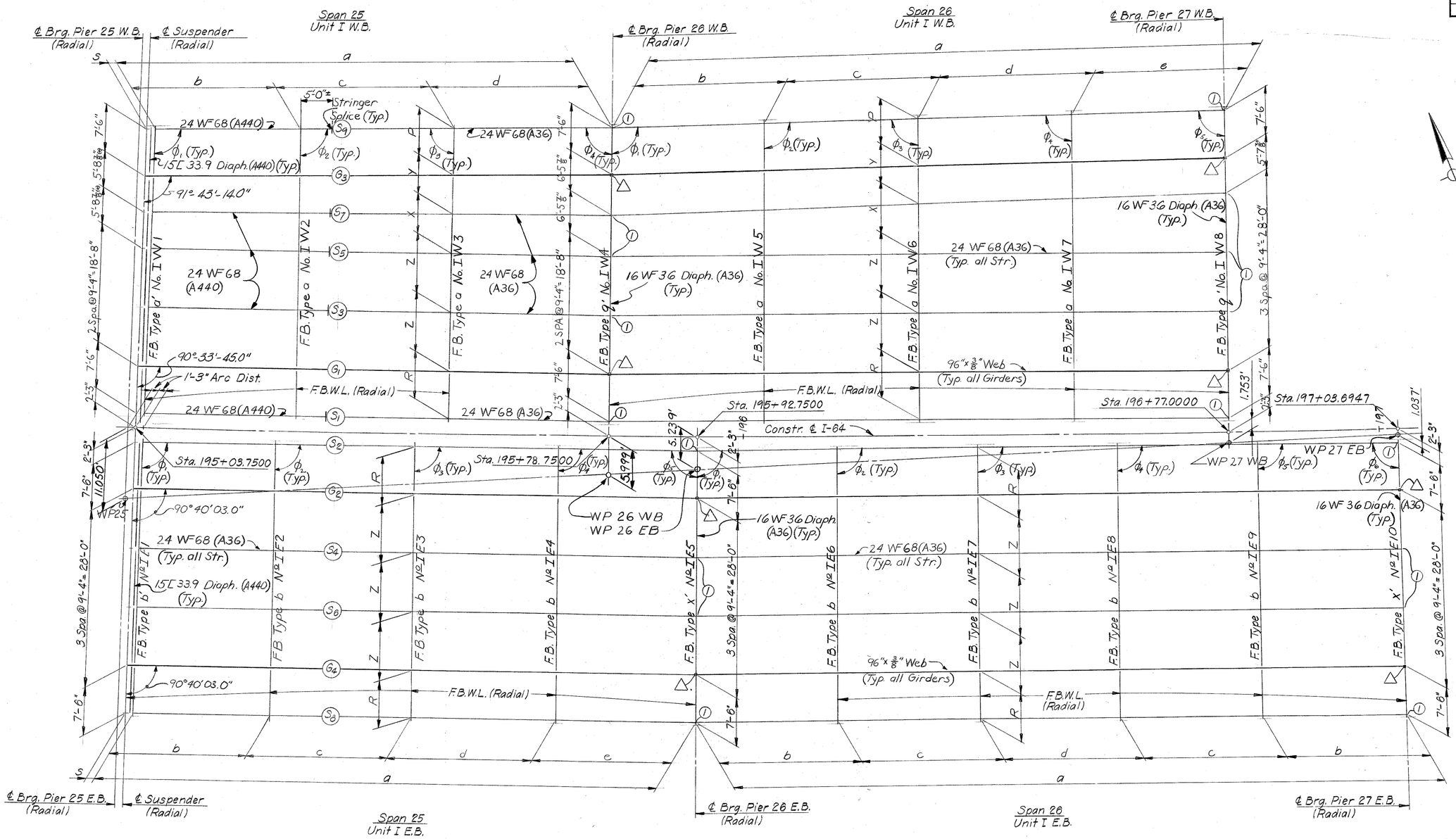

FRAMING NOTES

F.B.W.L. denotes Floor Beam Working Line.
All dimensions shown are horizontal and shall be corrected for grade where applicable.
Stringer splices may be located at the 0.2± or 0.8± point of any stringer span. For detail see Sheet A115
For location of Stringer ends at Expansion Dams see Expansion Dam Details.
See Girder Details for splice locations.

△ indicates Bearing location.

Example Bearing Designation — Pier 26 EB, Under Girder G2: 26 E - G 2; Pier 30 WB, Under Floorbeam near Gir. 1: 30 W - 1

For rolled beam stringers only A441 Steel may be substituted for A440 and A440 Steel may be substituted for A36 at the contractor's option and expense.

NOTE:
This Contractor shall field drill holes in the existing steel of the adjacent projects at Piers 25 and 55 to match the Expansion Joints furnished on this contract.

For location of WP's, see Sheet A5.
For dimensions and angles see Sheet A63
① Bend 24WF Stringer. See detail Sheet A114

FRAMING
STRUCTURAL STEEL

SHEET A60

COMMONWEALTH OF KENTUCKY
DEPARTMENT OF HIGHWAYS
FRANKFORT
COUNTY OF
JEFFERSON
I64-13TH ST. TO 7TH ST.
LOUISVILLE—LEXINGTON ROAD
SP 56-273-11L
STATION 208+08 **PROJECT NO.** I 64-2(35)3

BRIDGE NUMBER	DRAWING NO.	INDEX
	18572	

DESIGNED BY AJR CHECKED BY JFK DATE 11-70 REVISED DATE
DETAILED BY BLG CHECKED BY DATE REVISED DATE
TRACED BY CHECKED BY DATE REVISED DATE

FED. ROAD DIST.	STATE	FED. AID PRO. NO.	FISCAL YEAR	SHEET NO.	TOTAL SHEETS
7	KY.				

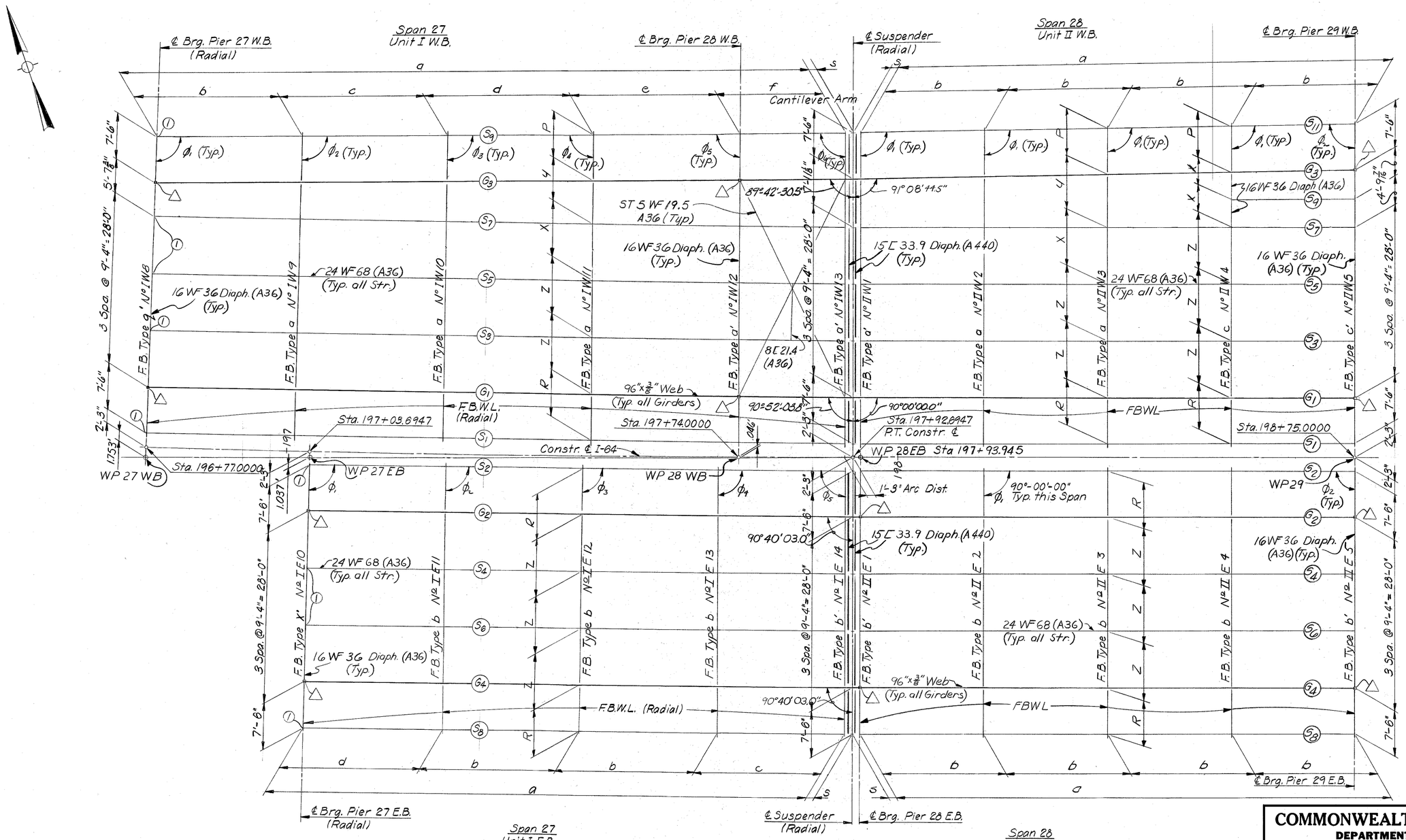

SHEET A61

For Framing Notes see Sheet A60
For dimensions and angles see Sheet A63
① Bend 24WF Stringer. See detail Sheet A114

FRAMING
STRUCTURAL STEEL

COMMONWEALTH OF KENTUCKY
DEPARTMENT OF HIGHWAYS
FRANKFORT
COUNTY OF
JEFFERSON

I64-13TH ST. TO 7TH ST.
LOUISVILLE — LEXINGTON ROAD

STATION 208+08 PROJECT NO. I 64-2(35)3 SP 56-273-11L

BRIDGE NUMBER	DRAWING NO.	INDEX
	18572	-

DESIGNED BY ADR & JFK CHECKED BY BLL DATE 11-70
DETAILED BY DATE
TRACED BY CHECKED BY DATE
REVISED DATE
REVISED DATE
REVISED DATE

FED. ROAD DIST.	STATE	FED. AID PRO. NO.	FISCAL YEAR	SHEET NO.	TOTAL SHEETS
7	KY.				

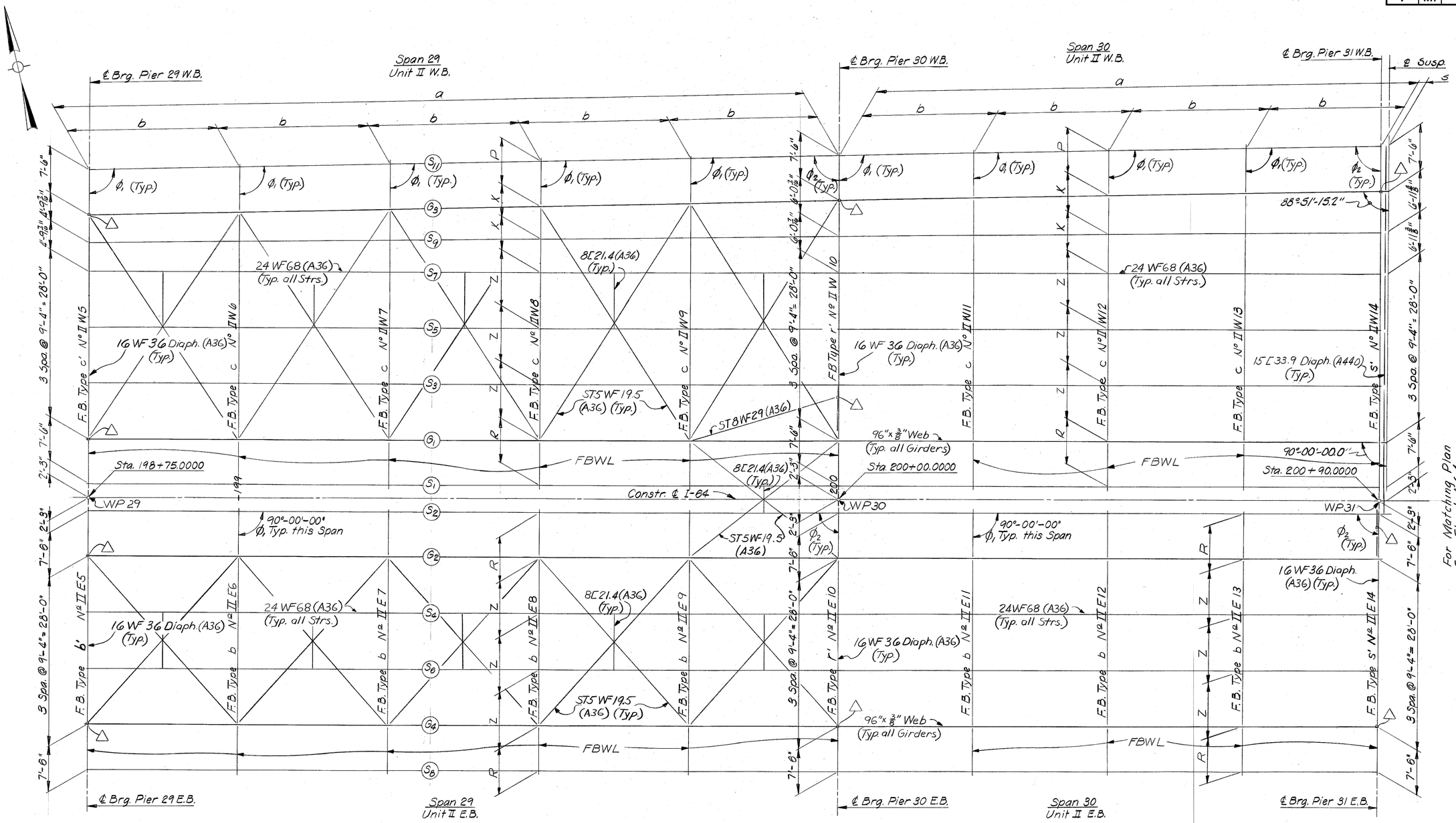

For Framing Notes see Sheet A60
For dimensions and angles see Sheet A63

FRAMING
STRUCTURAL STEEL

SHEET A62

COMMONWEALTH OF KENTUCKY
DEPARTMENT OF HIGHWAYS
FRANKFORT
COUNTY OF
JEFFERSON

I64-13TH ST. TO 7TH ST.
LOUISVILLE — LEXINGTON ROAD

STATION 208+08 — PROJECT NO. I 64-2(35)3 — SP 56-273-11L

BRIDGE NUMBER	DRAWING NO.	INDEX
	18572	

DESIGNED BY ARS — CHECKED BY RSL — DATE 11-10
DETAILED BY JFK — CHECKED BY — DATE
TRACED BY — CHECKED BY — DATE
REVISED — DATE
REVISED — DATE
REVISED — DATE

LETTING DATE

Dimensions — Span 25

	Beam	a	b	c	d	e	s	ϕ_1	ϕ_2	ϕ_3	ϕ_4	ϕ_5
West Bound	S_9	72.834	23.462	24.689	24.683	—	1.235	91° 42' 14.8"	91° 20' 52.3"	89° 01' 37.8"	89° 24' 07.8"	—
	G_3	72.979	23.508	24.738	24.733	—	1.237	91° 42' 06.5"	91° 20' 44.0"	89° 01' 46.0"	89° 24' 16.0"	—
	S_7	73.086	23.540	24.774	24.772	—	1.239	91° 07' 18.8"	90° 45' 56.3"	89° 36' 33.7"	89° 59' 03.7"	—
	S_5	73.200	23.573	24.813	24.814	—	1.241	90° 32' 37.5"	90° 11' 15.0"	90° 11' 15.0"	90° 33' 45.0"	—
	S_3	73.380	23.631	24.874	24.875	—	1.244	↕	↕	↕	↕	—
	G_1	73.560	23.689	24.935	24.936	—	1.247	↕	↕	↕	↕	—
	S_1	73.706	23.736	24.985	24.985	—	1.249	90° 32' 37.5"	90° 11' 15.0"	90° 11' 15.0"	90° 33' 45.0"	—
East Bound	S_2	87.799	21.012	22.262	22.262	22.263	1.251	90° 38' 55.5"	90° 20' 01.5"	90° 00' 00.0"	89° 39' 58.5"	90° 40' 03.0"
	G_2	87.972	21.054	22.306	22.306	22.306	1.253	↕	↕	↕	↕	↕
	S_4	88.187	21.106	22.360	22.360	22.361	1.256	↕	↕	↕	↕	↕
	S_6	88.401	21.157	22.414	22.414	22.416	1.259	↕	↕	↕	↕	↕
	G_4	88.616	21.208	22.469	22.469	22.470	1.262	↕	↕	↕	↕	↕
	S_8	88.787	21.249	22.512	22.512	22.514	1.265	90° 38' 55.5"	90° 20' 01.5"	90° 00' 00.0"	89° 39' 58.5	90° 40' 03.0"

Dimensions - Span 27

	Beam	a	b	c	d	e	f	s	ϕ_1	ϕ_2	ϕ_3	ϕ_4	ϕ_5	ϕ_6
West Bound	S_9	112.905	23.937	23.928	23.921	23.916	17.203	1.233	92° 01' 45.3"	91° 39' 55.8"	91° 18' 06.3"	89° 03' 43.2"	89° 25' 32.7"	89° 41' 14.7"
	G_3	113.131	23.985	23.976	23.969	23.964	17.237	1.235	92° 01' 37.0"	91° 39' 47.5"	91° 17' 58.0"	89° 03' 51.5"	89° 25' 41.0"	89° 41' 23.0"
	S_7	113.309	24.011	24.008	24.008	24.009	17.273	1.238	90° 52' 03.8"	90° 30' 14.3	90° 08' 24.8"	90° 13' 24.7"	90° 35' 14.2"	90° 50' 56.3"
	S_5	113.589	24.070	24.068	24.067	24.068	17.316	1.241	↕	↕	↕	↕	↕	↕
	S_3	113.869	24.130	24.127	24.126	24.127	17.359	1.244	↕	↕	↕	↕	↕	↕
	G_1	114.148	24.189	24.186	24.185	24.187	17.401	1.247	↕	↕	↕	↕	↕	↕
	S_1	114.373	24.236	24.234	24.234	24.234	17.435	1.249	90° 52' 03.8"	90° 30' 14.3"	90° 08' 24.8"	90° 13' 24.7"	90° 35' 14.2"	90° 50' 56.3"
East Bound	S_2	87.799	22.262	21.012	22.263	—	—	1.251	90° 40' 03.00"	90° 20' 01.5"	90° 00' 00.0"	89° 39' 58.5"	90° 38' 55.5"	—
	G_2	87.972	22.306	21.054	22.307	—	—	1.253	↕	↕	↕	↕	↕	—
	S_4	88.187	22.360	21.105	22.361	—	—	1.256	↕	↕	↕	↕	↕	—
	S_6	88.401	22.414	21.157	22.416	—	—	1.259	↕	↕	↕	↕	↕	—
	G_4	88.616	22.469	21.208	22.470	—	—	1.262	↕	↕	↕	↕	↕	—
	S_8	88.787	22.512	21.249	22.514	—	—	1.265	90° 40' 03.00"	90° 20' 01.5"	90° 00' 00.0"	89° 39' 58.5"	90° 38' 55.5"	—

Floorbeam Dimensions Span 25

Floorbeam Nº	R	Z	X & Y	P
IW1	7.500	9.333	5.752	7.502
IW2	7.499	↕	5.990	7.501
IW3	7.499	↕	6.240	7.501
IW4	7.500	↕	6.490	7.502
IE1 - IE5	7.500	9.333	—	—

Floorbeam Dimensions Span 26

Floorbeam Nº	R	Z	X	Y	P
IW4	7.500	9.333	6.490	6.990	7.502
IW5	7.500	↕	7.201	6.270	7.500
IW6	7.499	↕	7.911	6.050	7.501
IW7	7.499	↕	8.622	5.831	7.501
IW8	7.500	↕	9.333	5.612	7.502
IE5 - IE10	7.500	9.333	—	—	—

Floorbeam Dimensions Span 27

Floorbeam Nº	R	Z & X	Y	P
IW9	7.500	9.332	6.097	7.501
IW10	↕	9.332	6.582	7.500
IW11	↕	9.332	7.067	↕
IW12	↕	9.333	7.552	↕
IW13	7.500	9.333	7.901	7.500
IE10 - IE14	7.500	9.333	—	—

Floorbeam Dimensions Span 28

Floorbeam Nº	R	Z	X	Y	P
IIW1	7.500	9.333	9.333	7.951	7.502
IIW2	7.500	9.333	9.333	8.356	7.502
IIW3	↕	↕	9.333	8.762	↕
IIW4	↕	↕	4.584	—	↕
IIW5	7.500	9.333	4.786	—	7.502
IIE1 - IIE5	7.500	9.333	—	—	—

Dimensions — Span 26

	Beam	a	b	c	d	e	ϕ_1	ϕ_2	ϕ_3	ϕ_4	ϕ_5	ϕ_6
West Bound	S_9	96.984	24.256	24.248	24.242	24.238	91° 53' 51.8"	91° 31' 45.5"	88° 50' 20.9"	89° 12' 27.3"	89° 34' 33.7"	—
	G_3	97.177	24.304	24.297	24.290	24.286	91° 53' 43.5"	91° 31' 37.2"	88° 50' 29.2"	89° 12' 35.6"	89° 34' 42.0"	—
	S_7	97.354	24.353	24.343	24.332	24.326	92° 24' 36.6"	92° 02' 30.2"	88° 19' 36.2"	88° 41' 42.6"	89° 03' 48.9"	—
	S_5	97.516	24.380	24.379	24.377	24.380	90° 44' 12.8"	90° 22' 06.4"	90° 00' 00.0"	90° 22' 06.4"	90° 44' 12.8"	—
	S_3	97.756	24.440	24.438	24.438	24.440	↕	↕	↕	↕	↕	—
	G_1	97.997	24.500	24.499	24.498	24.500	↕	↕	↕	↕	↕	—
	S_1	98.189	24.548	24.547	24.546	24.548	90° 44' 12.8"	90° 22' 06.4"	90° 00' 00.0"	90° 22' 06.4"	90° 44' 12.8"	—
East Bound	S_2	111.006	22.202	22.201	22.200	—	90° 49' 55.5"	90° 29' 57.3"	90° 09' 59.1"	89° 50' 00.9"	89° 30' 02.7"	90° 49' 55.5"
	G_2	111.224	22.246	22.244	22.244	—	↕	↕	↕	↕	↕	↕
	S_4	111.495	22.301	22.298	22.297	—	↕	↕	↕	↕	↕	↕
	S_6	111.766	22.354	22.353	22.352	—	↕	↕	↕	↕	↕	↕
	G_4	112.038	22.409	22.407	22.406	—	↕	↕	↕	↕	↕	↕
	S_8	112.255	22.453	22.450	22.449	—	90° 49' 55.5"	90° 29' 57.3"	90° 09' 59.1"	89° 50' 00.9"	89° 30' 02.7"	90° 49' 55.5"

Dimensions - Span 28

	Beam	a	b	s	ϕ_1	ϕ_2
West Bound	S_{11}	81.071	20.268	1.250	91° 08' 44.5"	88° 51' 15.5"
	G_3	81.071	20.268	1.250	91° 08' 44.5"	88° 51' 15.5"
	S_9	—	20.266	—	90° 34' 22.6"	89° 25' 37.4"
	S_7	81.055	20.264	1.250	90° 00' 00.0"	90° 00' 00.0"
	S_5	↕	↕	↕	↕	↕
	S_3	↕	↕	↕	↕	↕
	G_1	↕	↕	↕	↕	↕
	S_1	81.055	20.264	1.250	90° 00' 00.0"	90° 00' 00.0"
East Bound	S_2	81.055	20.264	1.250	90° 00' 00.0"	90° 00' 00.0"
	G_2	↕	↕	↕	↕	↕
	S_4	↕	↕	↕	↕	↕
	S_6	↕	↕	↕	↕	↕
	G_4	↕	↕	↕	↕	↕
	S_8	81.055	20.264	1.250	90° 00' 00.0"	90° 00' 00.0"

Dimensions - Span 29

	Beam	a	b	ϕ_1	ϕ_2
West Bound	S_{11}	125.025	25.005	91° 08' 44.5"	88° 51' 15.5"
	G_3	125.025	25.005	91° 08' 44.5"	88° 51' 15.5"
	S_9	125.006	25.001	90° 34' 22.6"	89° 25' 37.4"
	S_7	125.000	25.000	90° 00' 00.0"	90° 00' 00.0"
	S_5	↕	↕	↕	↕
	S_3	↕	↕	↕	↕
	G_1	↕	↕	↕	↕
	S_1	125.000	25.000	90° 00' 00.0"	90° 00' 00.0"
East Bound	S_2	125.000	25.000	90° 00' 00.0"	90° 00' 00.0"
	G_2	↕	↕	↕	↕
	S_4	↕	↕	↕	↕
	S_6	↕	↕	↕	↕
	G_4	↕	↕	↕	↕
	S_8	125.000	25.000	90° 00' 00.0"	90° 00' 00.0"

Dimensions - Span 30

	Beam	a	b	s	ϕ_1	ϕ_2
West Bound	S_{11}	90.018	22.505	1.250	91° 08' 44.5"	88° 51' 15.5"
	G_3	90.018	22.505	1.250	91° 08' 44.5"	88° 51' 15.5"
	S_9	90.004	22.501	1.250	90° 34' 22.6"	89° 25' 37.4"
	S_7	90.000	22.500	1.250	90° 00' 00.0"	90° 00' 00.0"
	S_5	↕	↕	↕	↕	↕
	S_3	↕	↕	↕	↕	↕
	G_1	↕	↕	↕	↕	↕
	S_1	90.000	22.500	1.250	90° 00' 00.0"	90° 00' 00.0"
East Bound	S_2	90.000	22.500	—	90° 00' 00.0"	90° 00' 00.0"
	G_2	↕	↕	—	↕	↕
	S_4	↕	↕	—	↕	↕
	S_6	↕	↕	—	↕	↕
	G_4	↕	↕	—	↕	↕
	S_8	90.000	22.500	—	90° 00' 00.0"	90° 00' 00.0"

Floorbeam Dimensions - Span 29

Floorbeam Nº	R	Z	X	P
IIW6	7.500	9.333	5.036	7.502
IIW7	↕	↕	5.286	↕
IIW8	↕	↕	5.536	↕
IIW9	↕	↕	5.786	↕
IIW10	7.500	9.333	6.036	7.502
IIE5 - IIE10	7.500	9.333	—	—

Floorbeam Dimensions - Span 30

Floorbeam Nº	R	Z	X	P
IIW11	7.500	9.333	6.261	7.502
IIW12	↕	↕	6.486	↕
IIW13	↕	↕	6.711	↕
IIW14	7.500	9.333	6.936	7.502
IIE10 - IIE14	7.500	9.333	—	—

FRAMING
STRUCTURAL STEEL

SHEET A63

COMMONWEALTH OF KENTUCKY
DEPARTMENT OF HIGHWAYS
FRANKFORT
COUNTY OF
JEFFERSON
I64-13TH ST. TO 7TH ST.
LOUISVILLE — LEXINGTON
ROAD SP 56-273-IIL

STATION 208+08 P. E. PROJECT NO. I 64-2 (35) 3

CONSTRUCTION PROJECT NO.	MAINTENANCE PROJECT NO.	DRAWING NO.
		18572

DESIGNED BY ____ DATE ____ REVISED ____
DETAILED BY AHR CHECKED BY TBlock DATE 11-10 REVISED ____
TRACED BY ____ CHECKED BY ____ DATE ____ REVISED ____

FED. ROAD DIST.	STATE	FED. AID PRO. NO.	FISCAL YEAR	SHEET NO.	TOTAL SHEETS
7	KY.				

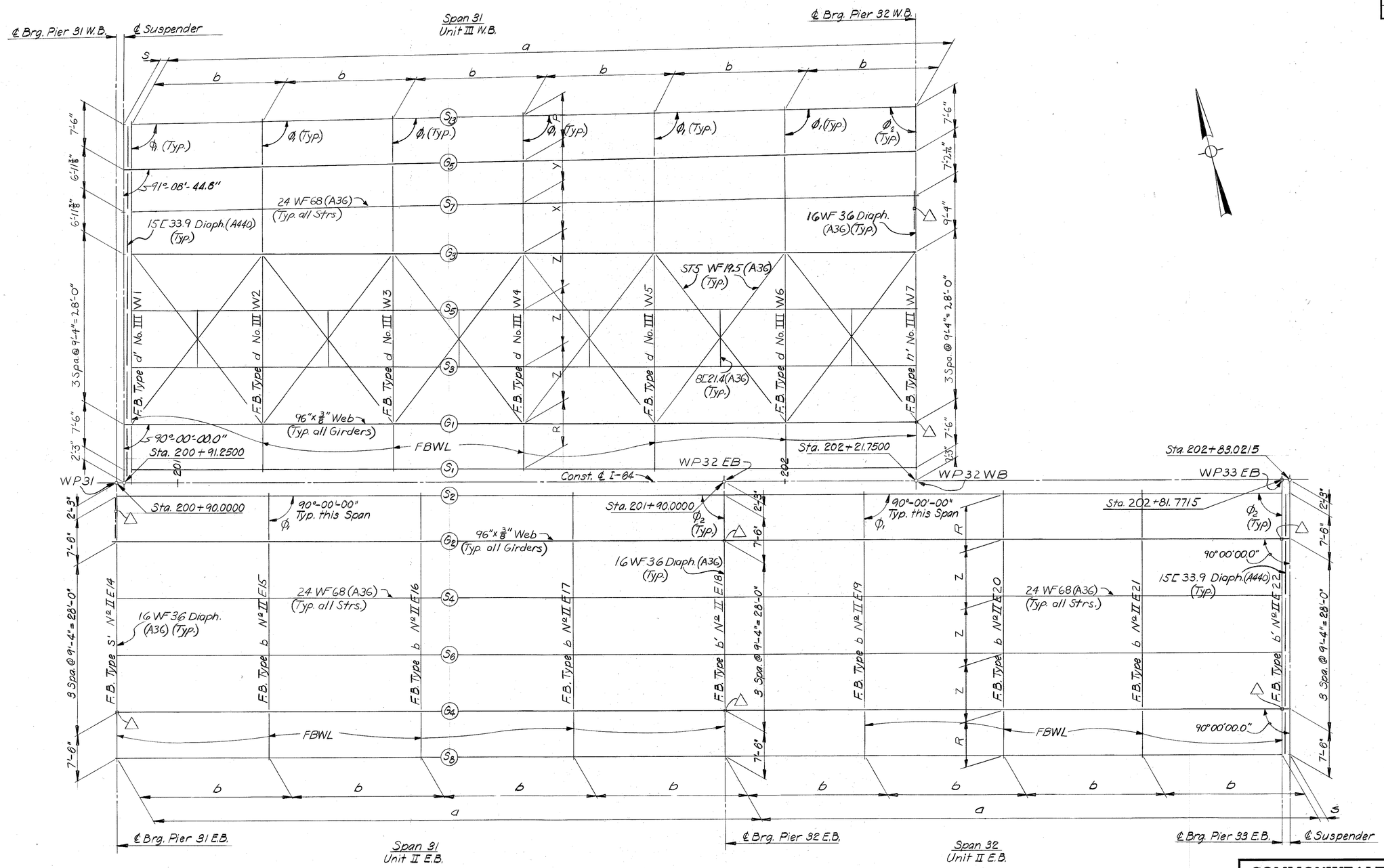

For Framing Notes see Sheet A60
For dimensions and angles see Sheet A70

FRAMING
STRUCTURAL STEEL

SHEET A64

COMMONWEALTH OF KENTUCKY
DEPARTMENT OF HIGHWAYS
FRANKFORT
COUNTY OF
JEFFERSON

I 64-13TH ST. TO 7TH ST.
LOUISVILLE— LEXINGTON ROAD

SP 56-273-11L

STATION 208+08 **PROJECT NO.** I 64-2(35)3

BRIDGE NUMBER	DRAWING NO.	INDEX
	1857L	

DESIGNED BY: A.I.R. & J.F.K. CHECKED BY: DATE: REVISED: DATE:
DETAILED BY: CHECKED BY: DATE: REVISED: DATE:
TRACED BY: CHECKED BY: DATE: REVISED: DATE:

FED. ROAD DIST.	STATE	FED. AID PROJ. NO.	FISCAL YEAR	SHEET NO.	TOTAL SHEETS
7	KY.				

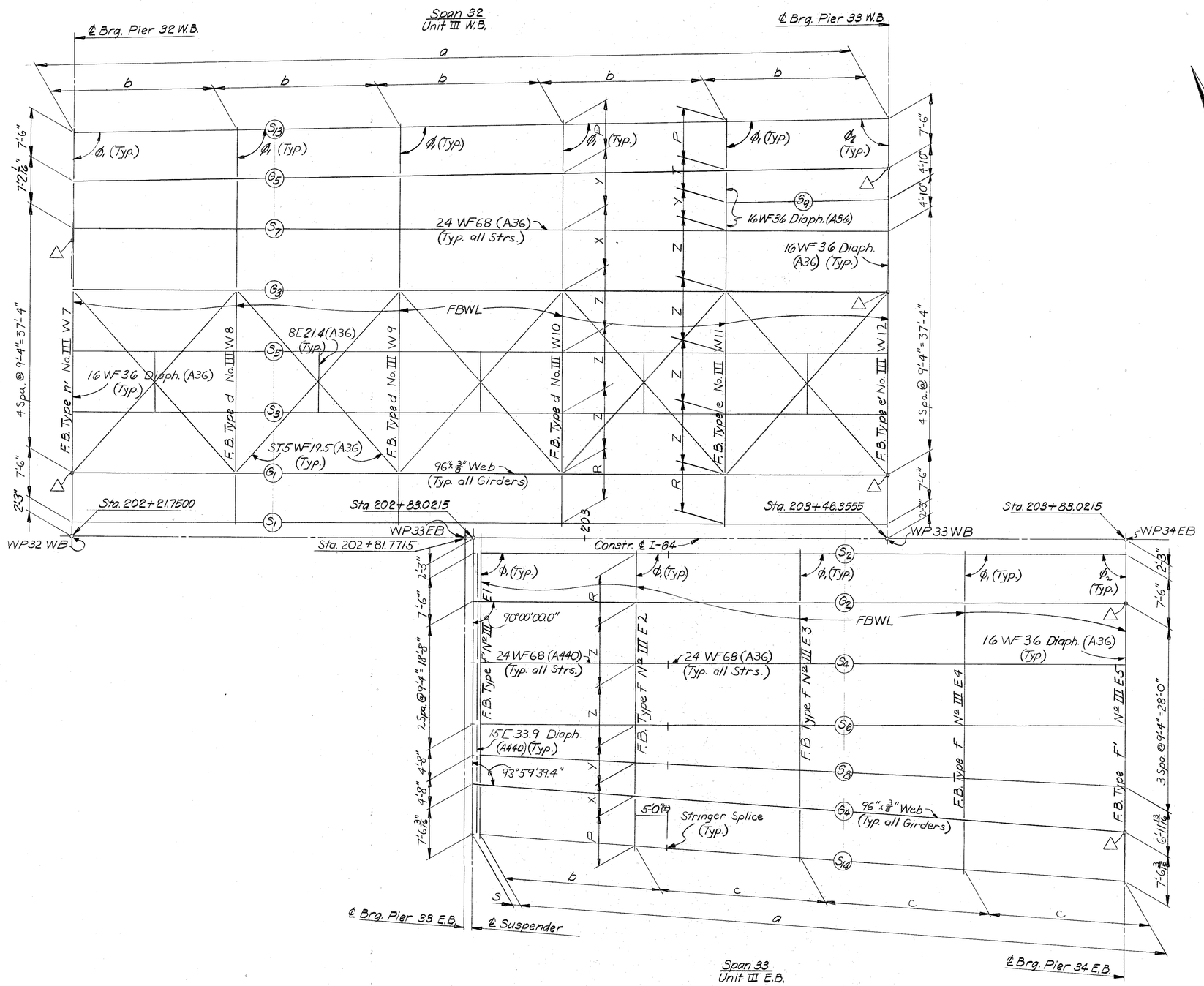

For Unit III E B
Cont'd. - See Sheet A67.

For Framing Notes see Sheet A60
For dimensions and angles see Sheet A70

FRAMING
STRUCTURAL STEEL

SHEET A65

DESIGNED BY JFK CHECKED BY
DETAILED BY AJR CHECKED BY
TRACED BY CHECKED BY
DATE REVISED
DATE 11-70 REVISED
DATE REVISED

COMMONWEALTH OF KENTUCKY
DEPARTMENT OF HIGHWAYS
FRANKFORT
COUNTY OF
JEFFERSON

I64-13TH ST. TO 7TH ST.
LOUISVILLE — LEXINGTON ROAD

SP 56-273-11L

STATION 208+08 PROJECT NO. I64-2(35)3

BRIDGE NUMBER	DRAWING NO.	INDEX
	18572	

FED. ROAD DIST.	STATE	FED. AID PROJ. NO.	FISCAL YEAR	SHEET NO.	TOTAL SHEETS
7	KY.				

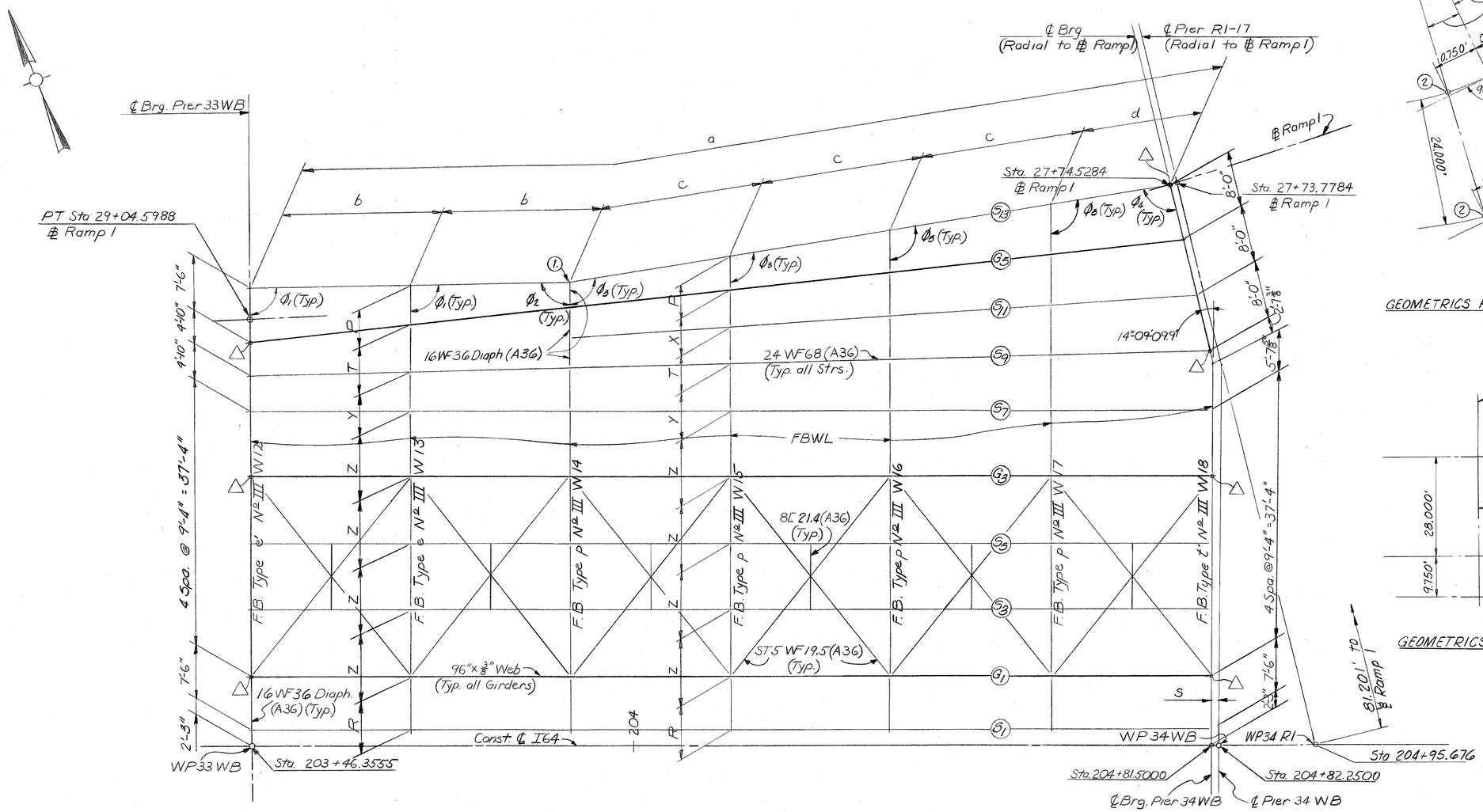

Span 33
Unit III WB

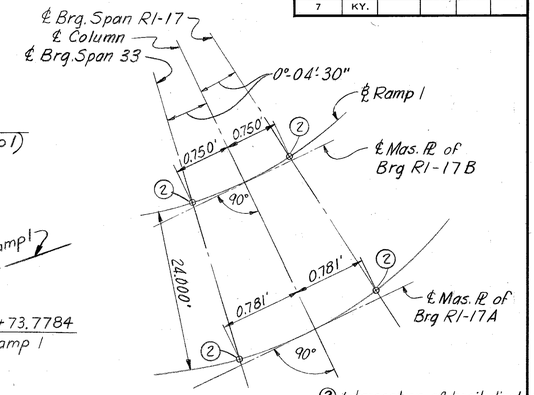

GEOMETRICS FOR BEARINGS R1-A & R1-B

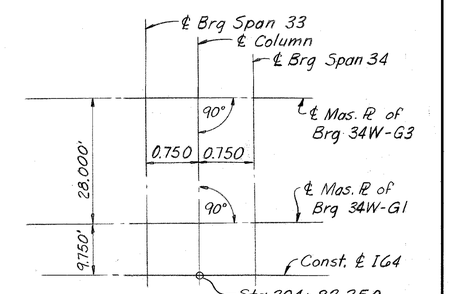

GEOMETRICS FOR BEARINGS 34W-G1 & G3

For Framing Notes see Sheet A60
For dimensions and angles see Sheet A70
① Bend 24WF68 Stringer. See detail Sheet A114

FRAMING
STRUCTURAL STEEL

SHEET A66

COMMONWEALTH OF KENTUCKY
DEPARTMENT OF HIGHWAYS
FRANKFORT
COUNTY OF
JEFFERSON
I64-13TH ST. TO 7TH ST
LOUISVILLE – LEXINGTON ROAD
SP 56-273-11L
STATION 208+08
PROJECT NO. I64-2(35)3

BRIDGE NUMBER	DRAWING NO.	INDEX
	18572	

DESIGNED BY JFK
DETAILED BY
TRACED BY
CHECKED BY
CHECKED BY
CHECKED BY
DATE
DATE 11-70
REVISED
REVISED
REVISED

FED. ROAD DIST.	STATE	FED. AID PRO. NO.	FISCAL YEAR	SHEET NO.	TOTAL SHEETS
7	KY.				

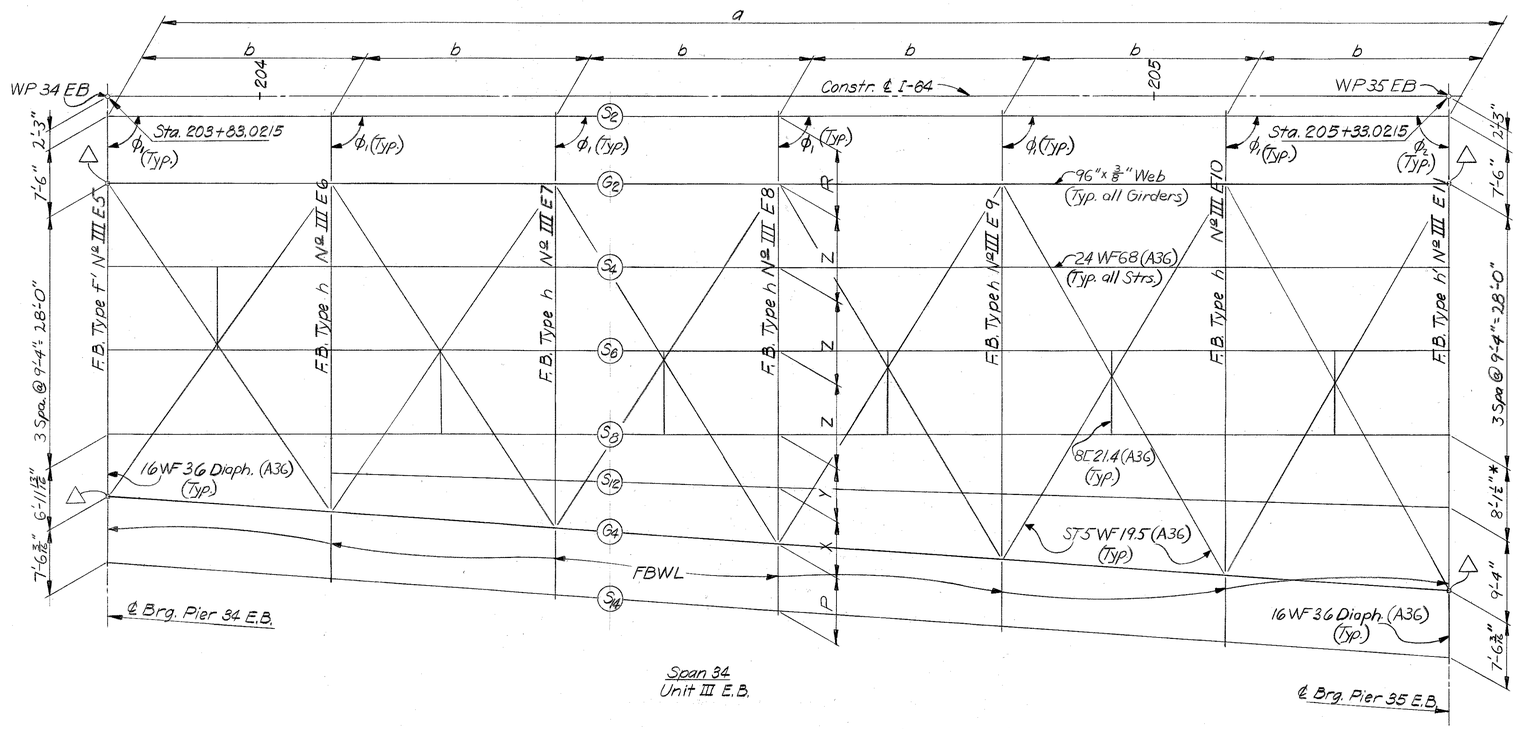

* See following Sheet for dimension & Unit III E.B. Cont'd.

For Framing Notes see Sheet A60
For dimensions and angles see sheet A70

FRAMING
STRUCTURAL STEEL

SHEET A67

COMMONWEALTH OF KENTUCKY
DEPARTMENT OF HIGHWAYS
FRANKFORT
COUNTY OF
JEFFERSON

I 64-13TH ST. TO 7TH ST.
LOUISVILLE - LEXINGTON ROAD

SP 56-273-11L

STATION 208+08 PROJECT NO. I 64-2(35)3

BRIDGE NUMBER	DRAWING NO.	INDEX
	18572	

DESIGNED BY J F K CHECKED BY Block DATE 11-70 REVISED DATE
DETAILED BY CHECKED BY DATE REVISED DATE
TRACED BY CHECKED BY DATE REVISED DATE

FED. ROAD DIST.	STATE	FED. AID PRO. NO.	FISCAL YEAR	SHEET NO.	TOTAL SHEETS
7	KY.				

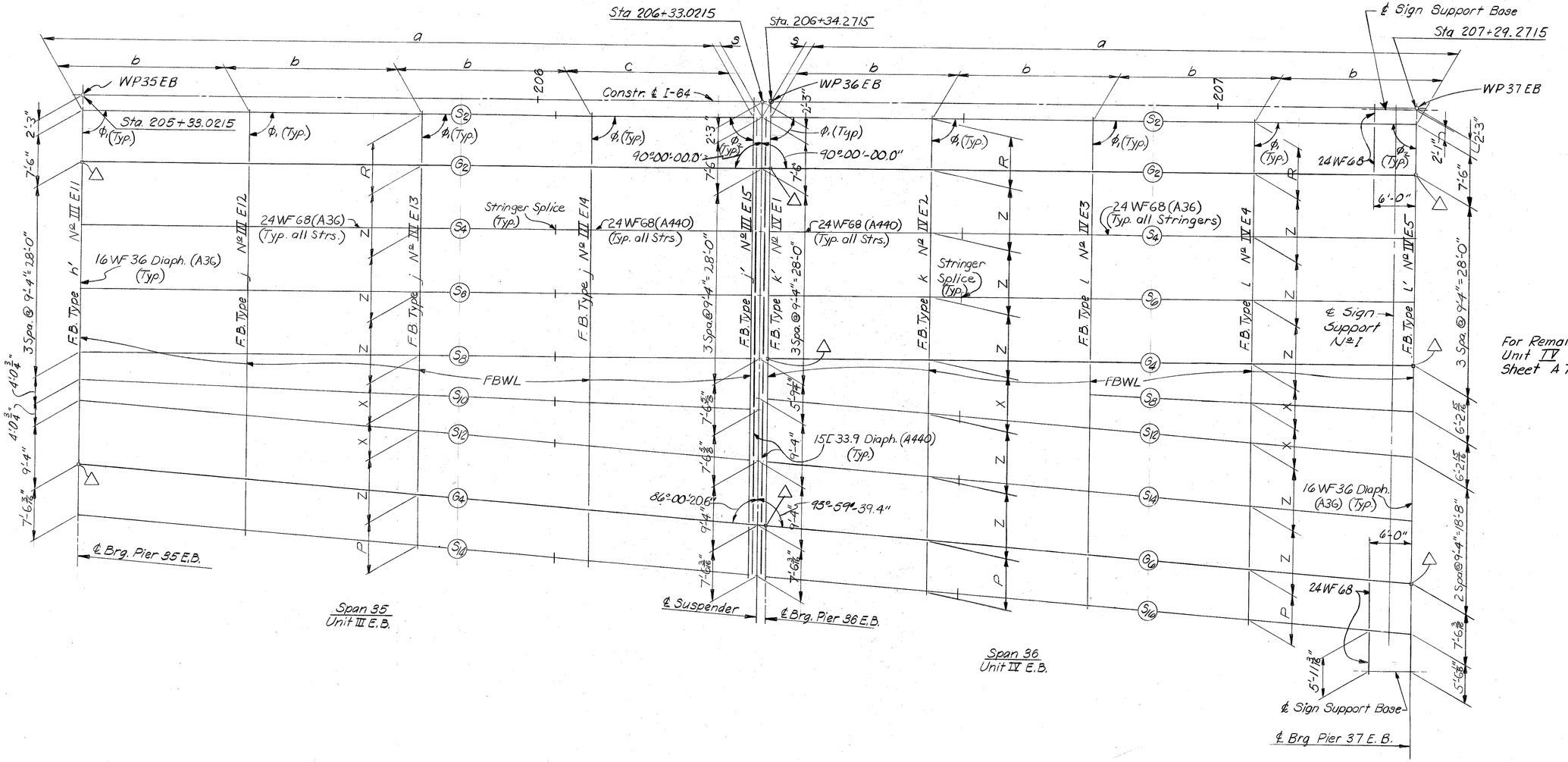

For Framing notes see Sheet A60
For dimensions and angles see Sheet A70

FRAMING
STRUCTURAL STEEL

SHEET A68

COMMONWEALTH OF KENTUCKY
DEPARTMENT OF HIGHWAYS
FRANKFORT
COUNTY OF
JEFFERSON

I 64-13TH ST. TO 7TH ST.
LOUISVILLE – LEXINGTON ROAD

SP 56-273-IIL

STATION 208+08 PROJECT NO. I 64-2(35)3

BRIDGE NUMBER	DRAWING NO.	INDEX
	18572	

DESIGNED BY AIR & JFK CHECKED BY RSlack DATE 11-10
DETAILED BY CHECKED BY DATE
TRACED BY CHECKED BY DATE
REVISED DATE REVISED DATE REVISED DATE

FED. ROAD DIST.	STATE	FED. AID PRO. NO.	FISCAL YEAR	SHEET NO.	TOTAL SHEETS
7	KY.				

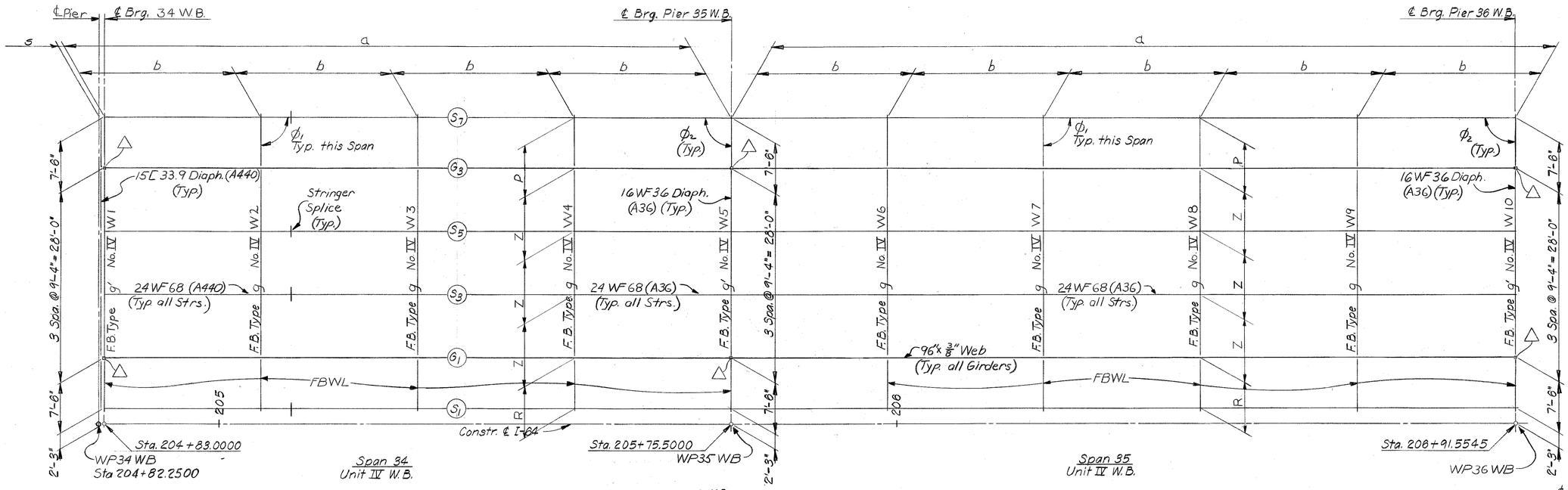

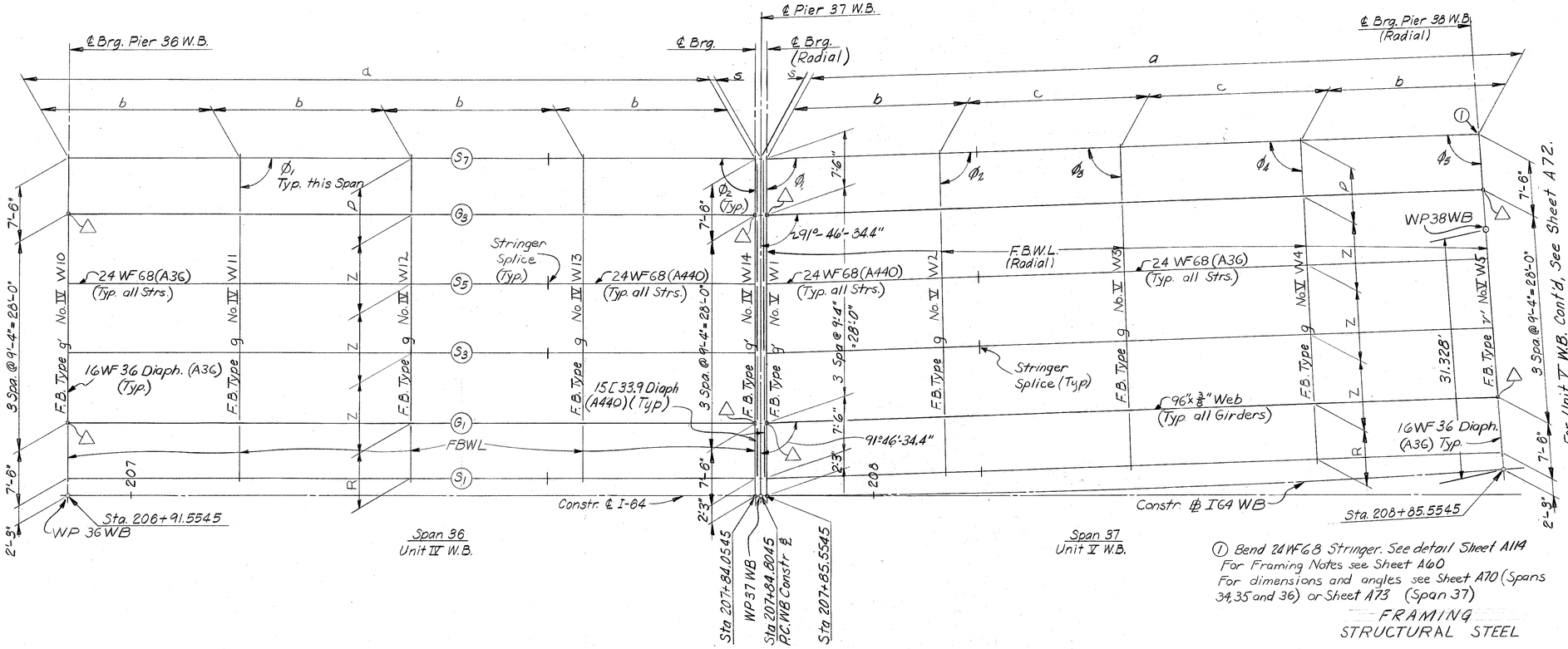

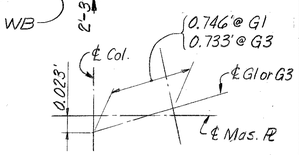

DETAIL A

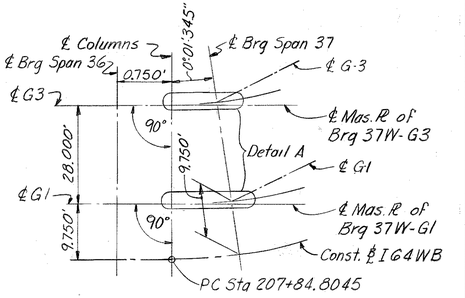

GEOMETRICS FOR BEARINGS 37W-G1 & -G3

① Bend 24WF68 Stringer. See detail Sheet A114
For Framing Notes see Sheet A60
For dimensions and angles see Sheet A70 (Spans 34, 35 and 36) or Sheet A73 (Span 37)

FRAMING
STRUCTURAL STEEL

SHEET A69

DESIGNED BY ___ DATE ___ REVISED ___ DATE ___
DETAILED BY AWR & JFK CHECKED BY RLL DATE 11-70 REVISED ___ DATE ___
TRACED BY ___ CHECKED BY ___ DATE ___ REVISED ___ DATE ___

COMMONWEALTH OF KENTUCKY
DEPARTMENT OF HIGHWAYS
FRANKFORT
COUNTY OF
JEFFERSON

I64–13TH ST. TO 7TH ST.
LOUISVILLE – LEXINGTON ROAD

SP 56-273-11L
STATION 208+08 PROJECT NO. I 64-2(35)3

BRIDGE NUMBER	DRAWING NO.	INDEX
	18572	

LETTING DATE

Dimensions - Span 31

	Beam	a	b	s	ϕ_1	ϕ_2
West Bound	S_{13}	129.276	21.546	1.250	91°08'44.5"	88°51'15.5"
	G_5	129.276	21.546	↑	91°08'44.5"	88°51'15.5"
	S_7	129.272	21.545	↑	91°02'49.3"	88°57'10.7"
	G_3	129.250	21.542	↑	90°00'00.0"	90°00'00.0"
	S_5	↑	↑	↑	↑	↑
	S_3	↑	↑	↑	↑	↑
	G_1	↓	↓	↓	↓	↓
	S_1	129.250	21.542	1.250	90°00'00.0"	90°00'00.0"
East Bound	S_2	100.000	25.000	—	90°00'00.0"	90°00'00.0"
	G_2	↑	↑	—	↑	↑
	S_4	↑	↑	—	↑	↑
	S_6	↑	↑	—	↑	↑
	G_4	↓	↓	—	↓	↓
	S_8	100.000	25.000	—	90°00'00.0"	90°00'00.0"

Dimensions - Span 32

	Beam	a	b	s	ϕ_1	ϕ_2
West Bound	S_{13}	124.630	24.926	—	91°08'44.5"	88°51'15.5"
	G_5	124.630	24.926	—	91°08'44.5"	88°51'15.5"
	S_9	–	24.929	—	91°25'18.4"	88°34'41.6"
	S_7	124.606	24.921	—	90°00'00.0"	90°00'00.0"
	G_3	124.606	24.921	—	↑	↑
	S_5	↑	↑	—	↑	↑
	S_3	↑	↑	—	↑	↑
	G_1	↓	↓	—	↓	↓
	S_1	124.606	24.921	—	90°00'00.0"	90°00'00.0"
East Bound	S_2	91.772	22.943	1.250	90°00'00.0"	90°00'00.0"
	G_2	↑	↑	↑	↑	↑
	S_4	↑	↑	↑	↑	↑
	S_6	↑	↑	↑	↑	↑
	G_4	↓	↓	↓	↓	↓
	S_8	91.772	22.943	1.250	90°00'00.0"	90°00'00.0"

Dimensions - Span 33

	Beam	a	b	c	d	s	ϕ_1	ϕ_2	ϕ_3	ϕ_4
West Bound	S_{13}	129.710	22.529	22.811	16.220	—	91°08'44.5"	88°51'15.5"	99°05'26.2"	95°03'43.7"
	G_5	131.343	22.653	22.654	18.075	—	96°07'39.2"	83°52'20.8"	96°07'39.2"	98°01'30.7"
	S_{11}	–	–	22.572	19.969	—	—	—	93°43'42.3"	100°25'27.6"
	S_9	134.546	22.531	22.531	21.891	—	91°25'18.4"	88°34'41.6"	91°25'18.4"	102°43'51.5"
	S_7	135.145	22.524	22.524	22.524	0.750	90°00'00.0"	90°00'00.0"	90°00'00.0"	90°00'00.0"
	G_3	↑	↑	↑	↑	↑	↑	↑	↑	↑
	S_5	↑	↑	↑	↑	↑	↑	↑	↑	↑
	S_3	↑	↑	↑	↑	↑	↑	↑	↑	↑
	G_1	↓	↓	↓	↓	↓	↓	↓	↓	↓
	S_1	135.145	22.524	22.524	22.524	0.750	90°00'00.0"	90°00'00.0"	90°00'00.0"	90°00'00.0"
East Bound	S_2	98.750	23.750	25.000	—	1.250	90°00'00.0"	90°00'00.0"	—	—
	G_2	↑	↑	↑	—	↑	↑	↑	—	—
	S_4	↑	↑	↑	—	↑	↑	↑	—	—
	S_6	98.750	23.750	25.000	—	1.250	90°00'00.0"	90°00'00.0"	—	—
	S_8	98.858	23.777	25.027	—	1.251	87°19'40.6"	92°40'19.4"	—	—
	G_4	98.991	23.808	25.061	—	1.253	86°00'20.6"	93°59'39.4"	—	—
	S_{14}	98.991	23.808	25.061	—	1.253	86°00'20.6"	93°59'39.4"	—	—

Floorbeam Dimension - Span 31

Floorbeam Nº	R	Z	X	Y	P
III W1	7.500	9.333	6.971	6.951	7.501
III W2	↑	↑	7.365	6.988	↑
III W3	↑	↑	7.758	7.026	↑
III W4	↑	↑	8.152	7.063	↑
III W5	↑	↑	8.546	7.099	↑
III W6	↑	↑	8.939	7.137	↑
III W7	7.500	9.333	9.333	7.174	7.501
II E14 - II E18	7.500	9.333	—	—	—

Floorbeam Dimensions - Span 32

Floorbeam Nº	R	X & Z	Y	T	P
III W8	7.500	9.333	7.672	—	7.502
III W9	↑	↑	8.171	—	7.501
III W10	↑	↑	8.669	—	7.502
III W11	↑	↑	4.215	4.953	7.501
III W12	7.500	9.333	4.833	4.833	7.502
II E18 - II E22	7.500	9.333	—	—	—

Floorbeam Dimensions - Span 33

Floorbeam Nº	R	Z	Y	T	X	P
III W13	7.500	9.333	5.392	6.692	—	5.534
III W14	↑	↑	5.951	4.276	4.275	3.567
III W15	↑	↑	6.510	5.185	5.225	4.753
III W16	↑	↑	7.069	6.093	6.177	5.938
III W17	↑	↑	7.628	7.002	7.127	7.124
III W18	↑	↑	8.251 *	8.000	8.000	8.000
III E1	7.500	9.333	4.724	—	4.696	7.518
III E2	↑	↑	5.833	—	5.246	↑
III E3	↑	↑	6.999	—	5.825	↑
III E4	↑	↑	8.166	—	6.404	↑
III E5	7.500	9.333	9.333	—	6.983	7.518

* along ℄ Brg. (developed)

Floorbeam Dimensions - Span 36

Floorbeam Nº	P	R	Z	X
IV W11 - IV W14	7.500	7.500	9.333	–
IV E1	7.519	↑	9.333	5.860
IV E2	7.519	↑	↑	7.518
IV E3	7.519	↑	↑	4.589
IV E4	7.518	↑	↑	5.417
IV E5	7.518	7.500	9.333	6.247

Dimensions - Span 34

	Beam	a	b	s	ϕ_1	ϕ_2
West Bound	S_7	92.500	23.125	0.750	90°00'00.0"	90°00'00.0"
	G_3	↑	↑	↑	↑	↑
	S_5	↑	↑	↑	↑	↑
	S_3	↑	↑	↑	↑	↑
	G_1	↓	↓	↓	↓	↓
	S_1	92.500	23.125	0.750	90°00'00.0"	90°00'00.0"
East Bound	S_2	150.000	25.000	—	90°00'00.0"	90°00'00.0"
	G_2	↑	↑	—	↑	↑
	S_4	↑	↑	—	↑	↑
	S_6	↑	↑	—	↑	↑
	S_8	150.000	25.000	—	90°00'00.0"	90°00'00.0"
	S_{12}		25.011	—	88°16'38.8"	91°43'21.2"
	G_4	150.365	25.061	—	86°00'20.6"	93°59'39.4"
	S_{14}	150.365	25.061	—	86°00'20.6"	93°59'39.4"

Dimensions - Span 35

	Beam	a	b	c	s	ϕ_1	ϕ_2
West Bound	S_7	116.055	23.211	—	—	90°00'00.0"	90°00'00.0"
	G_3	↑	↑	—	—	↑	↑
	S_5	↑	↑	—	—	↑	↑
	S_3	↑	↑	—	—	↑	↑
	G_1	↓	↓	—	—	↓	↓
	S_1	116.055	23.211	—	—	90°00'00.0"	90°00'00.0"
East Bound	S_2	98.750	25.000	23.750	1.250	90°00'00.0"	90°00'00.0"
	G_2	↑	↑	↑	↑	↑	↑
	S_4	↑	↑	↑	↑	↑	↑
	S_6	↑	↑	↑	↑	↑	↑
	S_8	98.750	25.000	23.750	1.250	90°00'00.0"	90°00'00.0"
	S_{10}	98.810	25.015	23.765	1.251	88°00'02.2	91°59'57.8"
	S_{12}	98.991	25.061	23.808	1.253	86°00'20.6"	93°59'39.4"
	G_4	↑	↑	↑	↑	↑	↑
	S_{14}	98.991	25.061	23.808	1.253	86°00'20.6"	93°59'39.4"

Dimensions - Span 36

	Beam	a	b	s	ϕ_1	ϕ_2
West Bound	S_7	92.500	23.125	0.750	90°00'00.0"	90°00'00.0"
	G_3	↑	↑	↑	↑	↑
	S_5	↑	↑	↑	↑	↑
	S_3	↑	↑	↑	↑	↑
	G_1	↓	↓	↓	↓	↓
	S_1	92.500	23.125	0.750	90°00'00.0"	90°00'00.0"
East Bound	S_2	95.000	23.750	1.250	90°00'00.0"	90°00'00.0"
	G_2	↑	↑	↑	↑	↑
	S_4	↑	↑	↑	↑	↑
	S_6	↑	↑	↑	↑	↑
	G_4	95.000	23.750	1.250	90°00'00.0"	90°00'00.0"
	S_8		23.765	—	88°00'01.5"	91°59'58.5"
	S_{12}	95.231	23.808	1.253	86°00'20.6"	93°59'39.4"
	S_{14}	↑	↑	↑	↑	↑
	G_6	↑	↑	↑	↑	↑
	S_{16}	95.231	23.808	1.253	86°00'20.6"	93°59'39.4"

Floorbeam Dimensions - Span 34

Floorbeam Nº	R	Z	X	Y	P
IV W1 - IV W5	7.500	9.333	—	—	7.500
III E6	↑	↑	4.365	4.364	7.518
III E7	↑	↑	5.358	5.116	↑
III E8	↑	↑	6.353	5.867	↑
III E9	↑	↑	7.347	6.619	↑
III E10	7.500	9.333	8.340	7.371	7.518

Floorbeam Dimensions - Span 35

Floorbeam Nº	R	Z	X	P
IV W5 - IV W10	7.500	9.333	—	7.500
III E11	↑	↑	4.062	7.518
III E12	↑	↑	4.935	↑
III E13	↑	↑	5.807	↑
III E14	↑	↑	6.680	↑
III E15	7.500	9.333	7.510	7.518

DESIGNED BY ____ DATE ____ REVISED ____
DETAILED BY W.E.K. & A.L.R. CHECKED BY B.L. DATE 11-70 REVISED ____
TRACED BY ____ CHECKED BY ____ DATE ____ REVISED ____
DATE ____ DATE ____ DATE ____

SHEET A70

FRAMING
STRUCTURAL STEEL

COMMONWEALTH OF KENTUCKY
DEPARTMENT OF HIGHWAYS
FRANKFORT
COUNTY OF
JEFFERSON

I 64-13TH ST. TO 7TH ST.
LOUISVILLE — LEXINGTON **ROAD**

STATION 208+08 — SP 56-273-1,11,L
P. E. PROJECT NO. I 64-2 (35) 3

CONSTRUCTION PROJECT NO.	MAINTENANCE PROJECT NO.	DRAWING NO.
		18572

FED. ROAD DIST.	STATE	FED. AID PRO. NO.	FISCAL YEAR	SHEET NO.	TOTAL SHEETS
7	KY.				

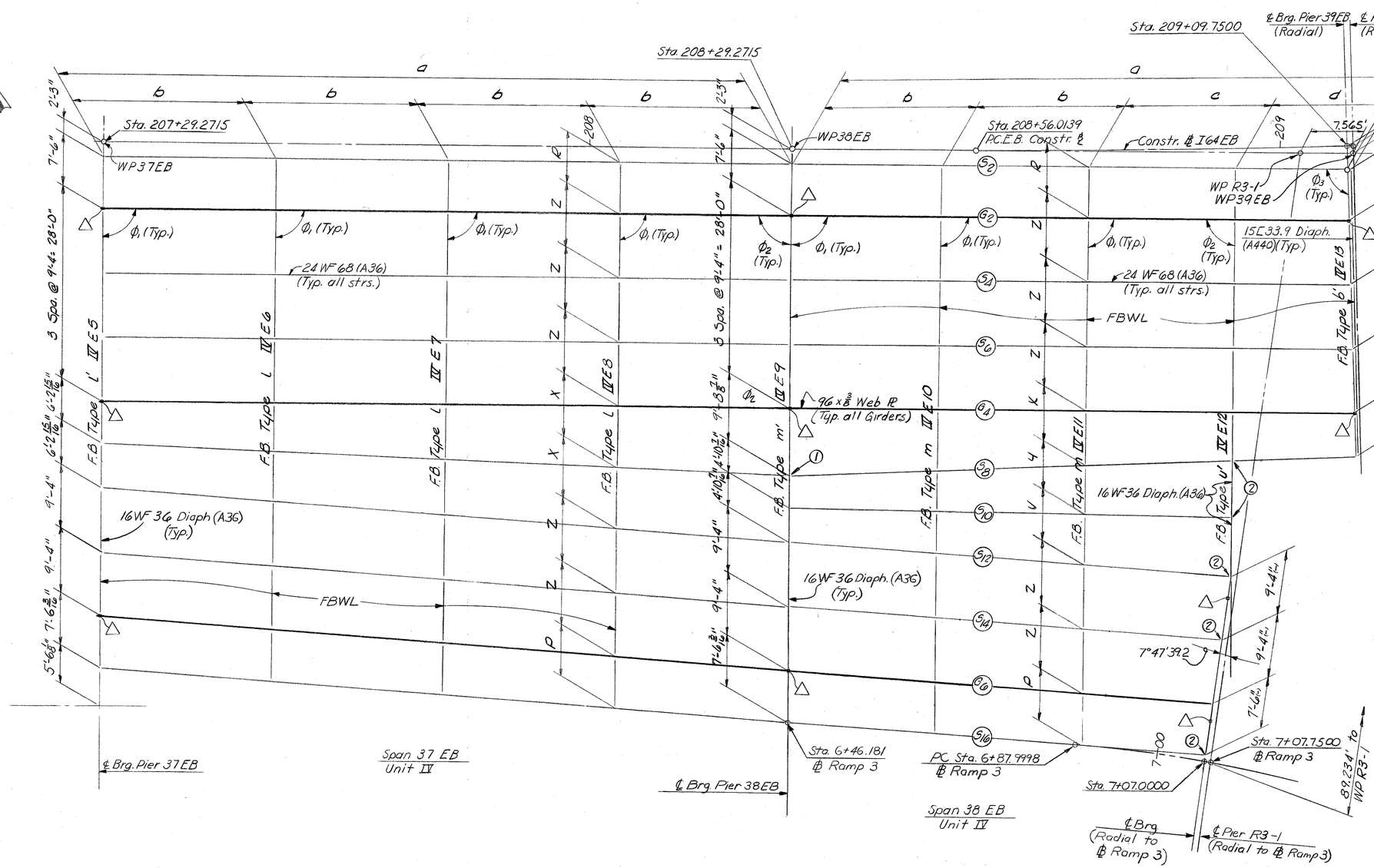

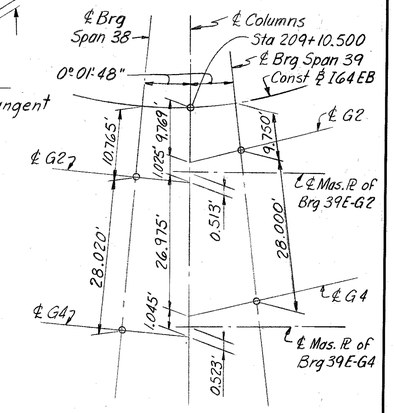

GEOMETRICS FOR BEARINGS 39E-G2 & G4

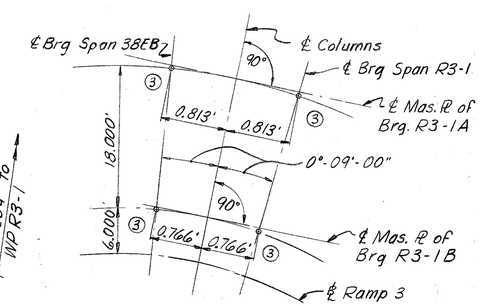

GEOMETRICS FOR BEARINGS R3-1A & -1B

③ Intersection of longitudinal and transverse ℄ of Rocker and Sole Pl.

SHEET A71

For Framing Notes see Sheet A60
For dimensions and angles see Sheet A73
① Bend 24WF68 Stringer. See Detail, Sheet A114
② For Stringer to Floorbeam connection details see Sheet A126

FRAMING
STRUCTURAL STEEL

COMMONWEALTH OF KENTUCKY
DEPARTMENT OF HIGHWAYS
FRANKFORT
COUNTY OF
JEFFERSON

I 64-13TH ST. TO 7TH ST.
LOUISVILLE-LEXINGTON ROAD

SP 56-273-11L

STATION 208+08 **PROJECT NO.** I 64-2(35)3

BRIDGE NUMBER	DRAWING NO.	INDEX
	18572	

DESIGNED BY: DATE: CHECKED BY: DATE: 11-70 REVISED: DATE:
DETAILED BY: AJR DATE: CHECKED BY: DATE: REVISED: DATE:
TRACED BY: DATE: CHECKED BY: DATE: REVISED: DATE:

FED. ROAD DIST.	STATE	FED. AID PRO. NO.	FISCAL YEAR	SHEET NO.	TOTAL SHEETS
7	KY.				

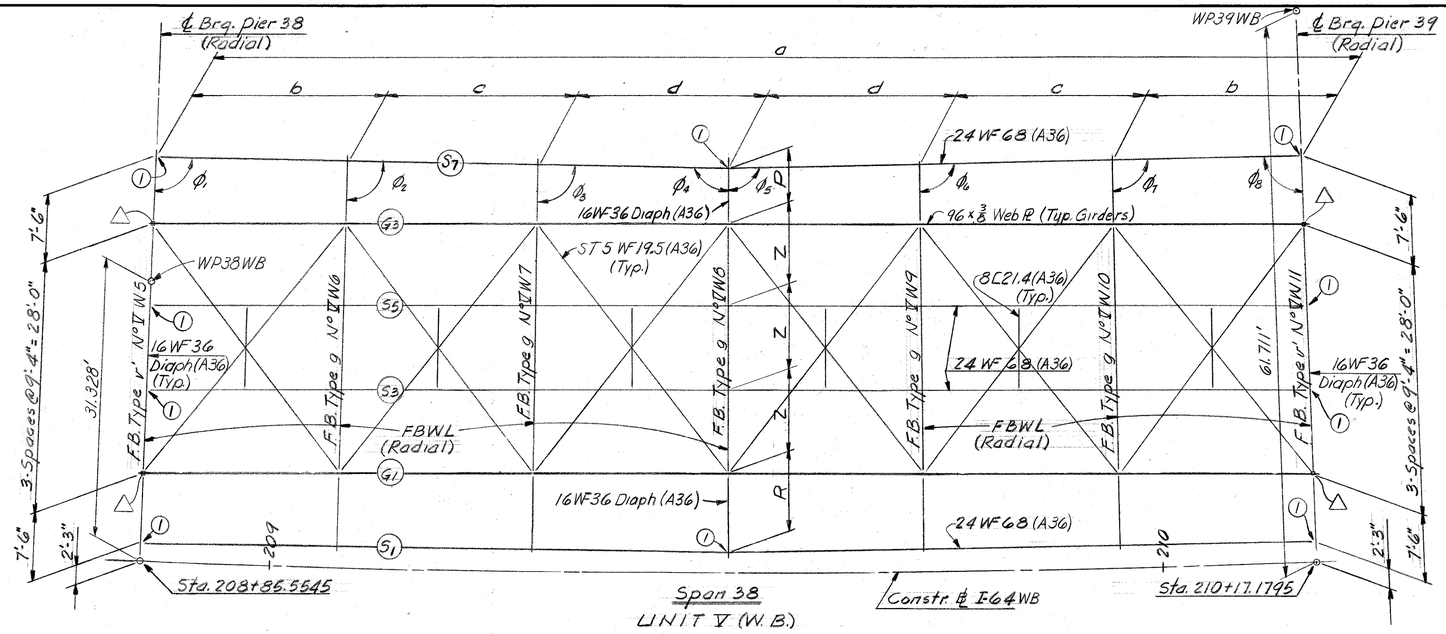

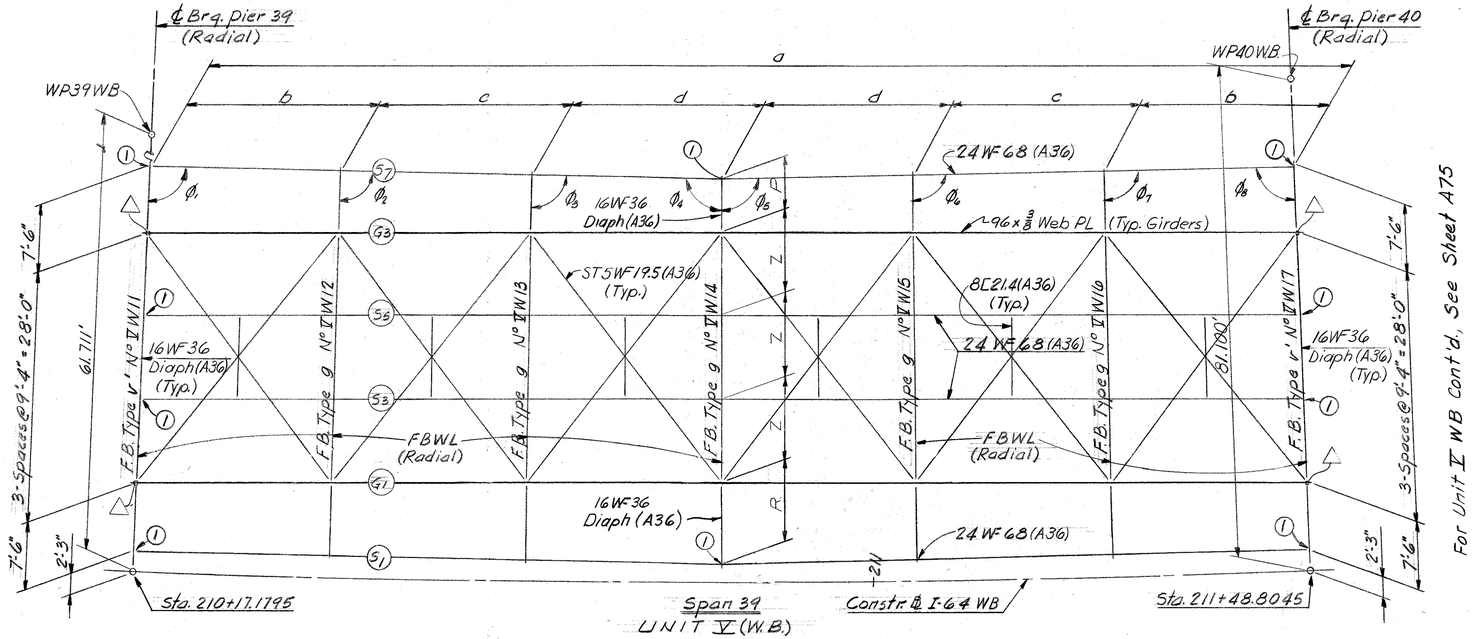

For Unit V WB Cont'd, See Sheet A75

For Framing Notes see Sheet A60
For dimensions and angles see Sheet A73
(1) Bend 24WF68 Stringer. See Detail, Sheet A114

SHEET A72

FRAMING
STRUCTURAL STEEL

COMMONWEALTH OF KENTUCKY
DEPARTMENT OF HIGHWAYS
FRANKFORT
COUNTY OF
JEFFERSON

I64-13TH ST. TO 7TH ST.
LOUISVILLE — LEXINGTON ROAD

STATION 208+08 **PROJECT NO.** I 64-2(35)3 SP 56-273-11L

BRIDGE NUMBER	DRAWING NO.	INDEX
	18572	

DESIGNED BY AJR	CHECKED BY	DATE	REVISED DATE
DETAILED BY Blank	CHECKED BY	DATE 11-70	REVISED DATE
TRACED BY	CHECKED BY	DATE	REVISED DATE

LETTING DATE

Dimensions - Span 37

	Beam	a	b	c	s	ϕ_1	ϕ_2	ϕ_3	ϕ_4	ϕ_5
West Bound	S_7	97.221	24.311	24.300	0.730	91°44'59.9"	90°52'29.9"	90°00'00.1"	90°52'30.1"	91°45'00.1"
	G_3	97.679	24.425	24.414	0.733	↑	↑	↑	↑	↑
	S_5	98.249	24.568	24.556	0.737					
	S_3	98.819	24.710	24.699	0.742					
	G_1	99.389	24.853	24.841	0.746	↓	↓	↓	↓	↓
	S_1	99.847	24.968	24.956	0.750	91°44'59.9"	90°52'29.9"	90°00'00.1"	90°52'30.1"	91°45'00.1"
East Bound	S_2	100.000	25.000	–	–	90°00'00.0"	90°00'00.0"	—	—	—
	G_2	↑	↑	–	–	↑	↑	—	—	—
	S_4			–	–			—	—	—
	S_6	↓	↓	–	–	↓	↓	—	—	—
	G_4	100.000	25.000	–	–	90°00'00.0"	90°00'00.0"	—	—	—
	S_8	100.061	25.015	—	—	88°00'02.2"	91°59'57.8"	—	—	—
	S_{12}	100.244	25.061	—	—	86°00'20.6"	93°59'39.4"	—	—	—
	S_{14}	↑	↑	—	—	↑	↑	—	—	—
	G_6	↓	↓	—	—	↓	↓	—	—	—
	S_{16}	100.244	25.061	—	—	86°00'20.6"	93°59'39.4"	—	—	—

Floorbeam Dimensions - Span 37

Floorbeam Nº	R	Z	X	P
V W1	7.500	9.333	—	7.500
V W2 & V W4	7.498	9.330	—	7.498
V W3	7.497	9.329	—	7.497
V W5	7.500	9.333	—	7.500
IV E6	↑	↑	7.120	7.518
IV E7			7.992	↕
IV E8	↓	↓	8.865	

Dimensions - Span 38

	Beam	a	b	c	d	s	ϕ_1	ϕ_2	ϕ_3	ϕ_4	ϕ_5	ϕ_6	ϕ_7	ϕ_8
West Bound	S_7	127.979*	21.331	21.327	21.331	–	91°09'06.2"	90°23'02.0	89°36'57.9"	91°09'06.2"	91°09'06.2"	90°23'02.0"	89°36'57.9"	91°09'06.2"
	G_3	128.555	21.439	21.423	21.416	–	92°18'12.3"	91°32'08.2"	90°46'04.1"	90°00'00"	90°00'00"	89°13'55.8"	88°27'51.7"	92°18'12.4"
	S_5	129.305	21.564	21.548	21.541	–	92°18'12.3"	91°32'08.2"	90°46'04.1"	90°00'00"	90°00'00"	89°13'55.8"	88°27'51.7"	92°18'12.4"
	S_3	130.056	21.689	21.673	21.666	–	92°18'12.3"	91°32'08.2"	90°46'04.1"	90°00'00"	90°00'00"	89°13'55.8"	88°27'51.7"	92°18'12.4"
	G_1	130.806	21.814	21.798	21.791	–	92°18'12.3"	91°32'08.2"	90°46'04.1"	90°00'00"	90°00'00"	89°13'55.8"	88°27'51.7"	92°18'12.4"
	S_1	131.435*	21.907	21.903	21.908	–	91°09'06.2"	90°23'02.0"	89°36'57.9"	91°09'06.2"	91°09'06.2"	90°23'02.0"	89°36'57.9"	91°09'06.2"
East Bound	S_2	80.588	21.416	21.416	16.339	0.752	90°00'00.0"	90°00'00.0"	92°08'58.0"	—	—	—	—	—
	G_2	80.870	↑	↑	16.621	0.756	↑	↑	↑	—	—	—	—	—
	S_4	81.220			16.971	0.761				—	—	—	—	—
	S_6	81.570	↓	↓	17.321	0.766	↓	↓	↓	—	—	—	—	—
	G_4	81.920	21.416	21.416	17.671	0.771	90°00'00.0"	90°00'00.0"	92°08'58.0"	—	—	—	—	—
	S_8	82.228	21.438	21.433	17.929	0.774	92°17'04.0"	87°42'56.0"	89°51'54.0"	—	—	—	—	—
	S_{10}		21.419	21.419	—	—	89°03'54.2"	90°56'05.8"	—	—	—	—	—	—
	S_{12}		21.468	21.468	—	—	86°00'20.6"	86°12'00.2"	—	—	—	—	—	—
	S_{14}		21.468	20.200	—	—	86°00'20.6"	86°12'00.2"	—	—	—	—	—	—
	G_6		21.468	18.931	—	—	86°00'20.6"	86°12'00.2"	—	—	—	—	—	—
	S_{16}		21.468	17.912	—	—	86°00'20.6"	86°12'00.2"	—	—	—	—	—	—

* Developed length

Floorbeam Dimensions - Span 38

Floorbeam Nº	R	Z	X	Y	V	P
V W6	7.937	9.329	–	–		7.068
V W7	8.375	9.327	–	–		6.637
V W8	8.815	9.326	–	–		6.208
V W9	8.375	9.327	–	–		6.637
V W10	7.937	9.329	–	–		7.068
V W11	7.500	9.333	–	–		7.500
IV E9	7.500	9.333	9.738	4.869	4.869	7.518
IV E10	↑	↑	8.884	6.073	6.015	7.518
IV E11	↓	↓	8.029	7.277	7.161	7.518
IV E12	7.500	9.333	7.175	8.480	8.307	7.498
IV E13	7.505	9.340	6.465	–	–	–

Dimensions - Span 39

	Beam	a	b	c	d or s	ϕ_1	ϕ_2	ϕ_3	ϕ_4	ϕ_5	ϕ_6	ϕ_7	ϕ_8
West Bound	S_7	127.979*	21.331	21.327	21.331	91°09'06.2"	90°23'02.0"	89°36'57.9"	91°09'06.2"	91°09'06.2"	90°23'02.0"	89°36'57.9"	91°09'06.2"
	G_3	128.555	21.439	21.423	21.416	92°18'12.3"	91°32'08.2"	90°46'04.1"	90°00'00"	90°00'00"	89°13'55.8"	88°27'51.7"	92°18'12.4"
	S_5	129.305	21.564	21.548	21.541	92°18'12.3"	91°32'08.2"	90°46'04.1"	90°00'00"	90°00'00"	89°13'55.8"	88°27'51.7"	92°18'12.4"
	S_3	130.056	21.689	21.673	21.666	92°18'12.3"	91°32'08.2"	90°46'04.1"	90°00'00"	90°00'00"	89°13'55.8"	88°27'51.7"	92°18'12.4"
	G_1	130.806	21.814	21.798	21.791	92°18'12.3"	91°32'08.2"	90°46'04.1"	90°00'00"	90°00'00"	89°13'55.8"	88°27'51.7"	92°18'12.4"
	S_1	131.435*	21.907	21.903	21.908	91°09'06.2"	90°23'02.0"	89°36'57.9"	91°09'06.2"	91°09'06.2"	90°23'02.0"	89°36'57.9"	91°09'06.2"
East Bound	S_2	70.103	23.369	23.364	0.751	91°24'00.0"	90°28'00.0	89°32'00.0"	91°24'00.0"	–	–	–	–
	G_2	70.469	23.492	23.486	0.755	↑	↑	↑	↑	–	–	–	–
	S_4	70.926	23.644	23.638	0.760					–	–	–	–
	S_6	71.382	23.796	23.790	0.765					–	–	–	–
	G_4	71.838	23.948	23.942	0.770	↓	↓	↓	↓	–	–	–	–
	S_8	72.294	24.070	24.064	0.774	91°24'00.0"	90°28'00.0"	89°32'00.0"	91°24'00.0"	–	–	–	–

* Developed length

Floorbeam Dimensions - Span 39

Floorbeam Nº	R	Z	P
V W12	7.937	9.329	7.068
V W13	8.375	9.327	6.637
V W14	8.815	9.326	6.208
V W15	8.375	9.327	6.637
V W16	7.937	9.329	7.068
V W17	7.500	9.333	7.500
V E1 & V E4	7.500	9.333	—
V E2 & V E3	7.498	9.331	—

DESIGNED BY AJR CHECKED BY TB DATE 11-70 REVISED
DETAILED BY CHECKED BY DATE REVISED
TRACED BY CHECKED BY DATE REVISED

SHEET A73

FRAMING
STRUCTURAL STEEL

COMMONWEALTH OF KENTUCKY
DEPARTMENT OF HIGHWAYS
FRANKFORT
COUNTY OF
JEFFERSON

I64-13TH ST. TO 7TH ST.
LOUISVILLE—LEXINGTON **ROAD**

STATION 208+08 **P. E. PROJECT NO.** I64-2(35)3 SP 56-273-11L

CONSTRUCTION PROJECT NO. | MAINTENANCE PROJECT NO. | DRAWING NO. 18572

FED. ROAD DIST.	STATE	FED. AID PRO. NO.	FISCAL YEAR	SHEET NO.	TOTAL SHEETS
7	KY.				

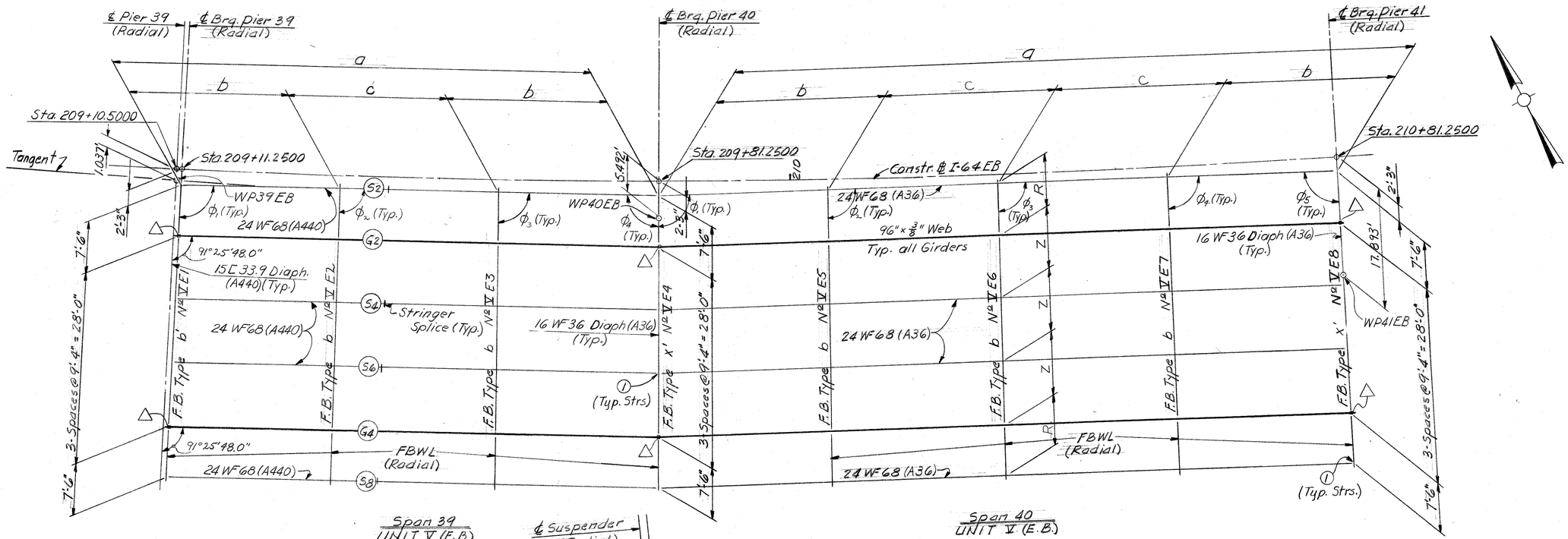

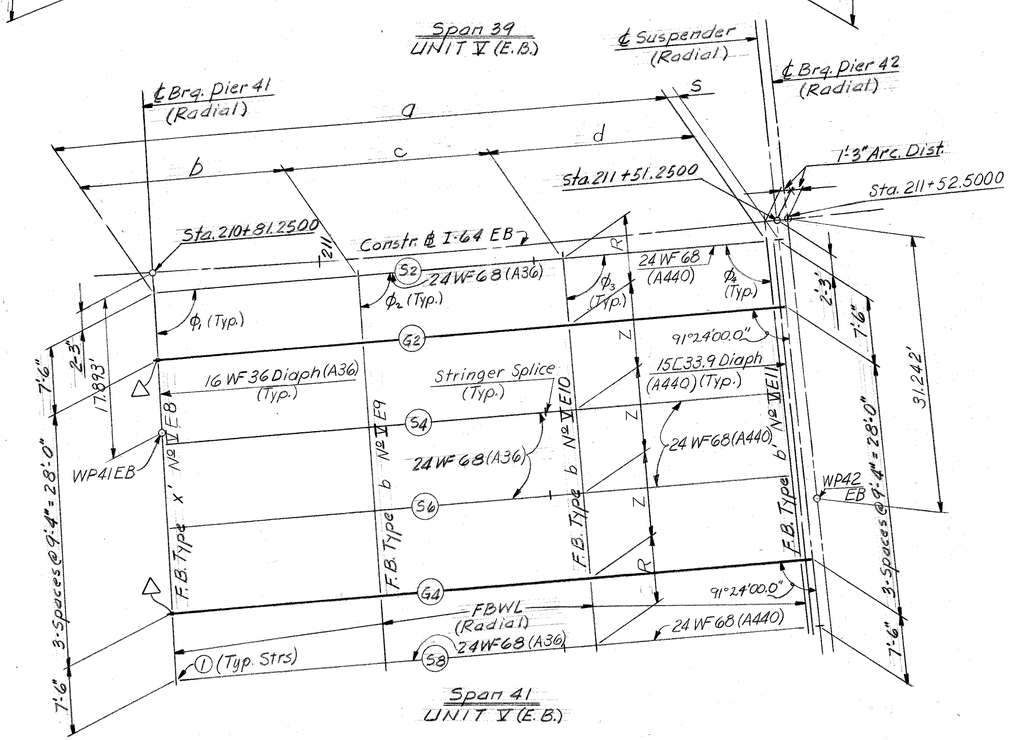

For Framing Notes see Sheet A60
For dimensions and angles see Sheet A73 (for Span 39) and A78 (for Spans 40 & 41).

① Bend 24 WF68 Stringers. See detail Sheet A114

For Bearing Geometrics at Pier 39EB see Sheet A71

FRAMING
STRUCTURAL STEEL

SHEET A74

COMMONWEALTH OF KENTUCKY
DEPARTMENT OF HIGHWAYS
FRANKFORT
COUNTY OF
JEFFERSON

I 64-13TH ST. TO 7TH ST.
LOUISVILLE – LEXINGTON ROAD

SP 56-273-11L

STATION 208+08 **PROJECT NO.** I 64-2(35)3

BRIDGE NUMBER	DRAWING NO.	INDEX
	18572	

DESIGNED BY AJR DATE
DETAILED BY JFK CHECKED BY RWL DATE 11-7-10
TRACED BY CHECKED BY DATE
REVISED DATE
REVISED DATE
REVISED DATE

FED. ROAD DIST.	STATE	FED. AID PRO. NO.	FISCAL YEAR	SHEET NO.	TOTAL SHEETS
7	KY.				

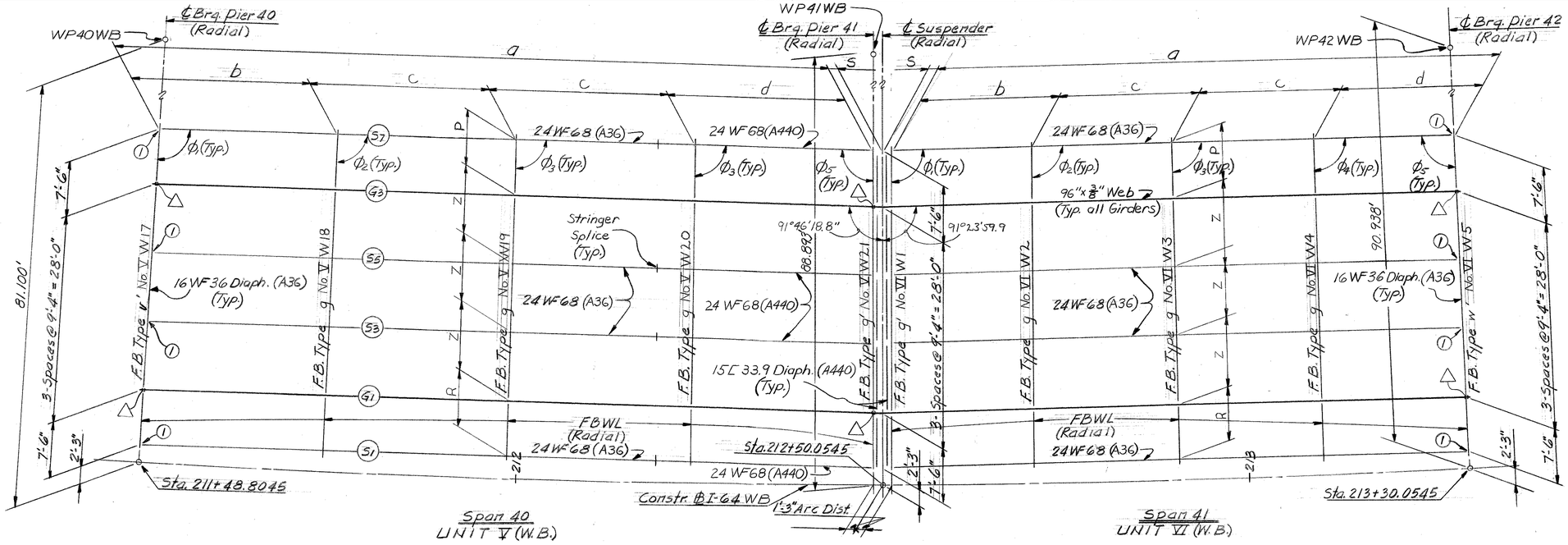

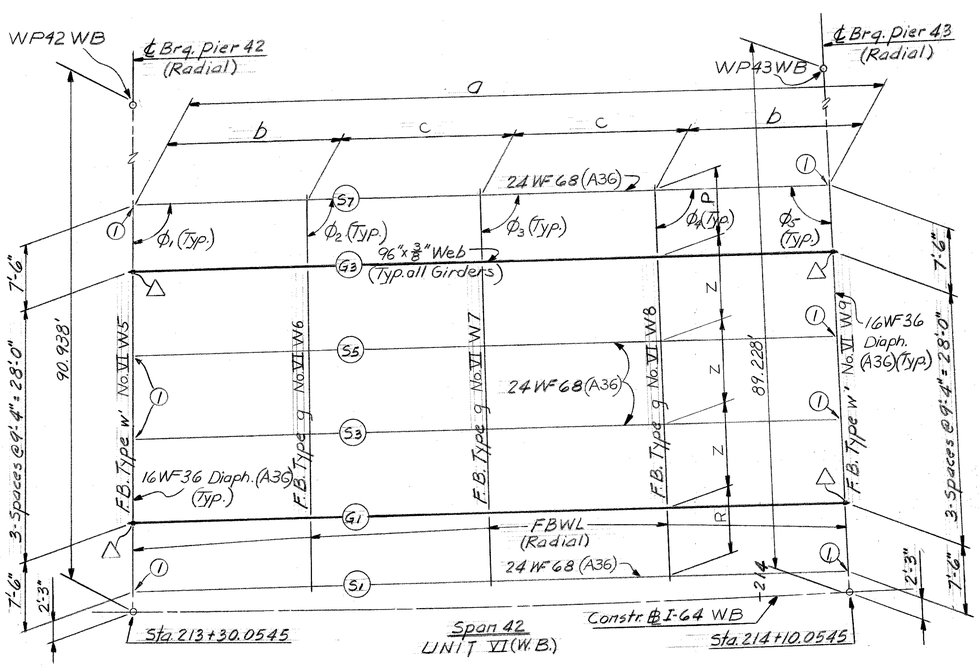

For Unit VI W.B. Cont'd, See Sheet A77.

For Framing Notes see Sheet A60
For dimensions and angles see Sheet A78
① Bend 24WF68 Stringers. See detail, Sheet A114

SHEET A75

FRAMING
STRUCTURAL STEEL

COMMONWEALTH OF KENTUCKY
DEPARTMENT OF HIGHWAYS
FRANKFORT
COUNTY OF
JEFFERSON

I64-13TH ST. TO 7TH ST.
LOUISVILLE – LEXINGTON ROAD

SP 56-273-11L

STATION 208+08 PROJECT NO. I64-2(35)3

BRIDGE NUMBER	DRAWING NO.	INDEX
	18572	

DESIGNED BY JFK & ALR CHECKED BY BIRL DATE 11-70 REVISED DATE
DETAILED BY CHECKED BY DATE REVISED DATE
TRACED BY CHECKED BY DATE REVISED DATE

FED. ROAD DIST.	STATE	FED. AID PROJ. NO.	FISCAL YEAR	SHEET NO.	TOTAL SHEETS
7	KY.				

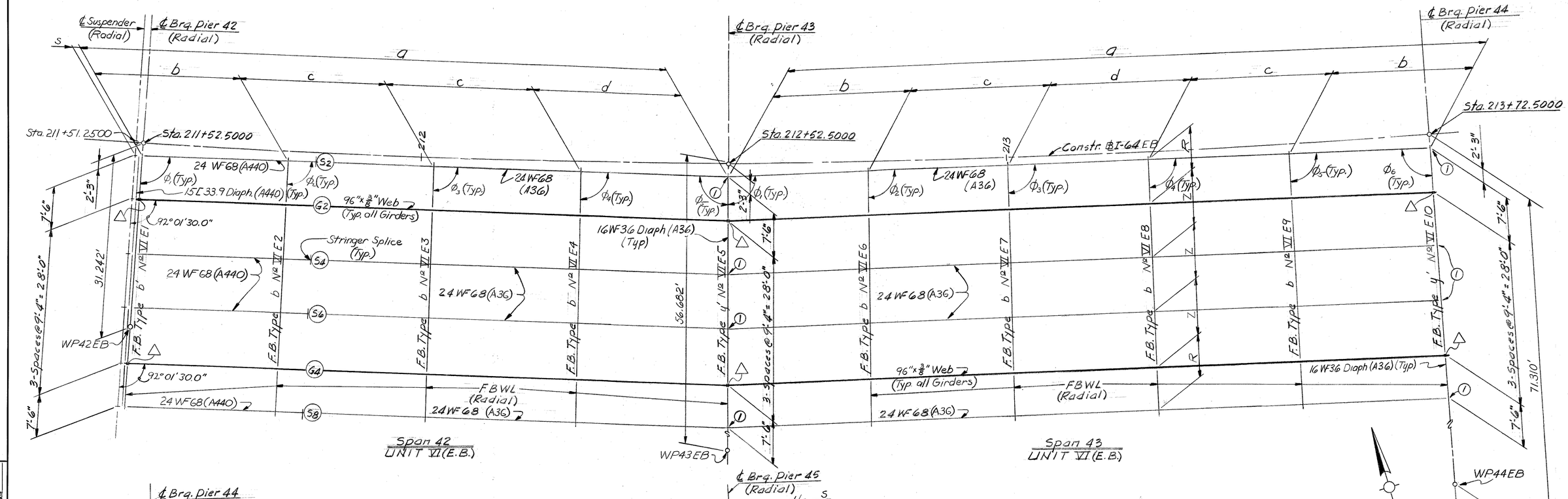

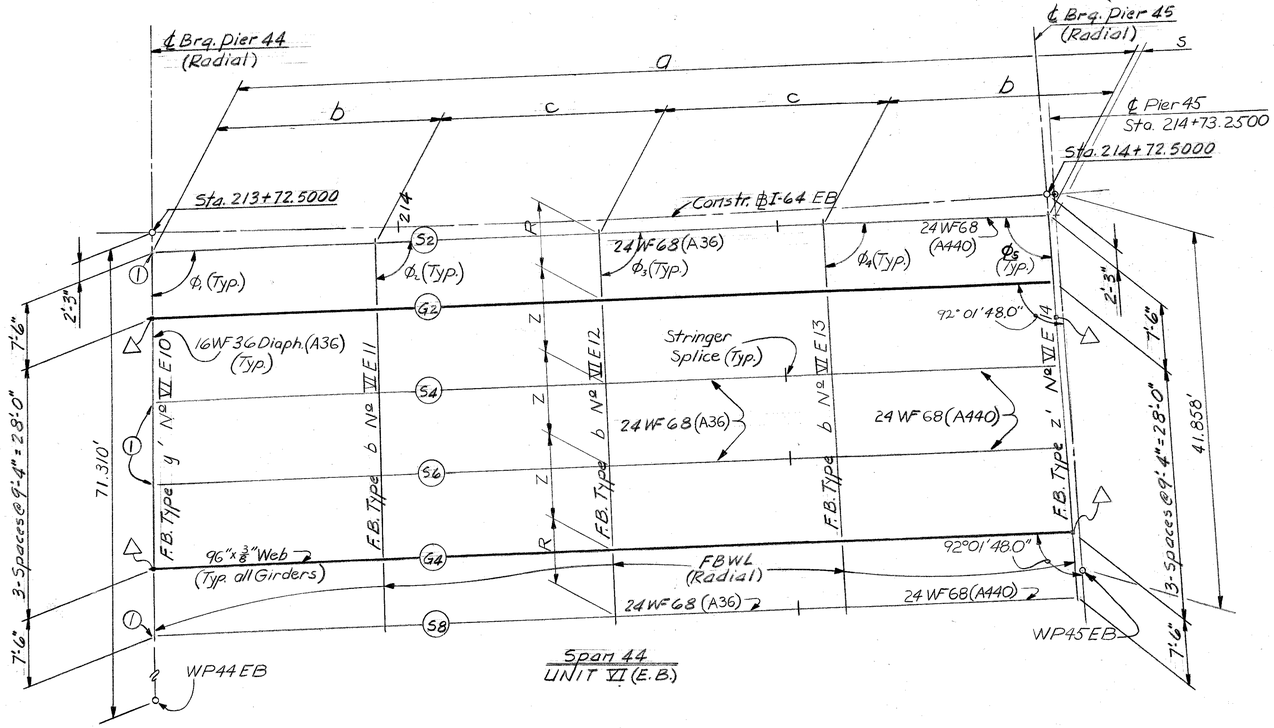

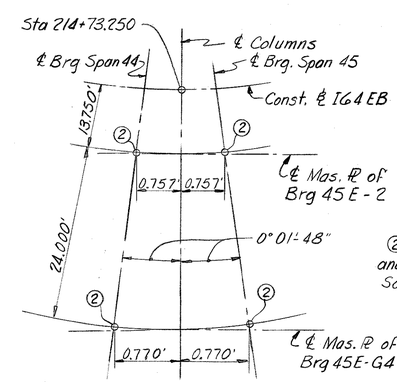

② Intersection of longitudinal and transverse ℄ of Rocker and Sole ℙ.

GEOMETRICS FOR BEARINGS 45E-2 & -G4

For Framing Notes see Sheet A60
For dimensions and angles see Sheet A78
① Bend 24WF68 Stringer. See detail, Sheet A114

SHEET A76

FRAMING
STRUCTURAL STEEL

COMMONWEALTH OF KENTUCKY
DEPARTMENT OF HIGHWAYS
FRANKFORT
COUNTY OF
JEFFERSON

I 64-13TH ST. TO 7TH ST.
LOUISVILLE — LEXINGTON ROAD

STATION 208+08 **PROJECT NO.** I 64-2(35)3 SP 56-273-11L

BRIDGE NUMBER	DRAWING NO.	INDEX
	18572	

DESIGNED BY AJR DATE
DETAILED BY AJR DATE 11-70
TRACED BY CHECKED BY JFK
CHECKED BY DATE
CHECKED BY DATE
REVISED DATE
REVISED DATE
REVISED DATE

FED. ROAD DIST.	STATE	FED. AID PROJ. NO.	FISCAL YEAR	SHEET NO.	TOTAL SHEETS
7	KY.				

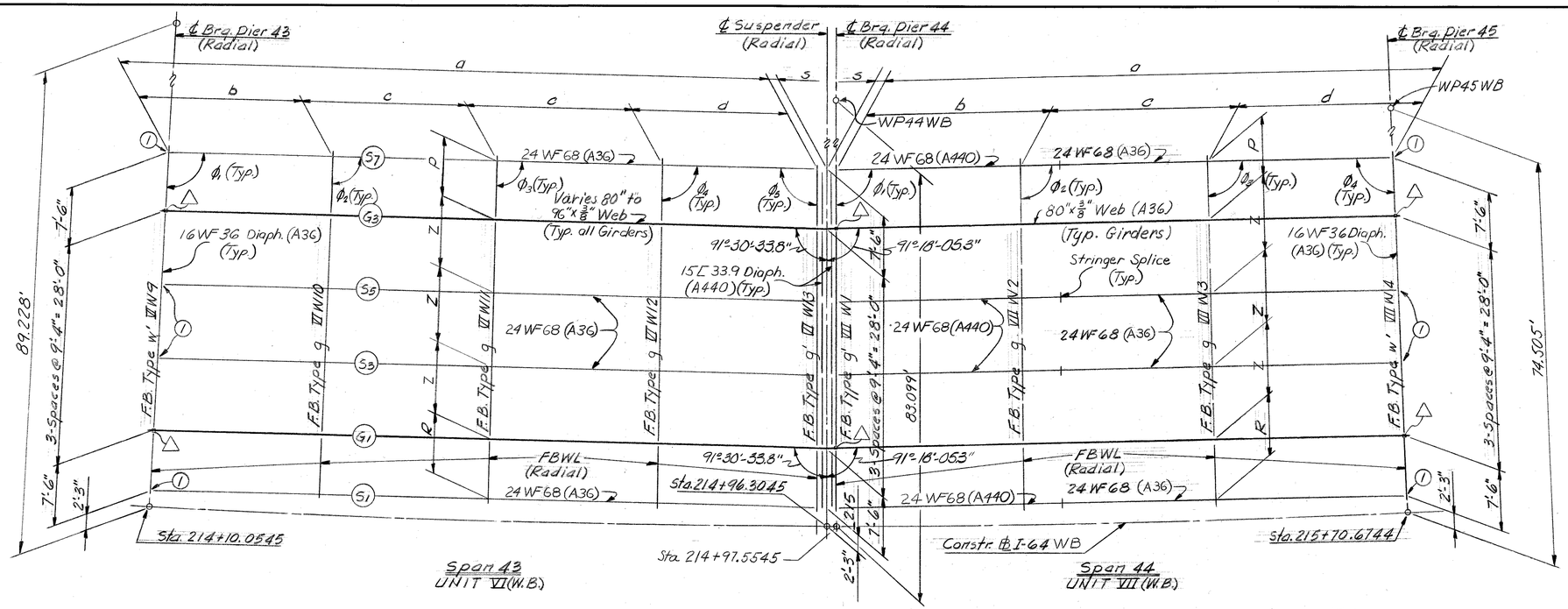

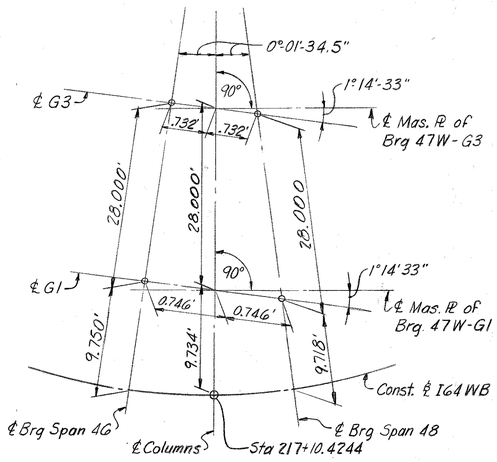

GEOMETRICS FOR BEARINGS 47W-G1 & -G3
See Sheet A82 for Ramp 4 Geometrics

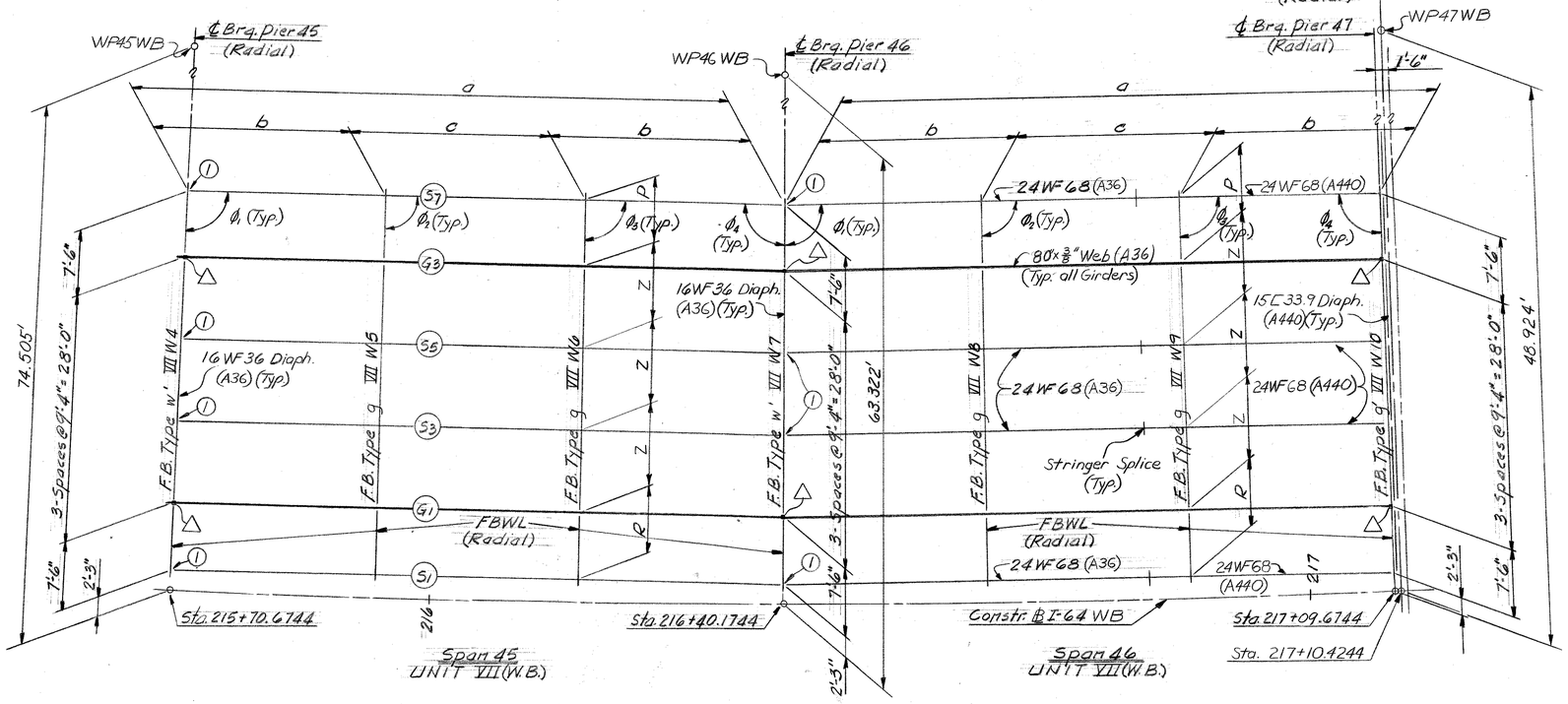

For Framing Notes see Sheet A60
For dimensions and angles see Sheet A78 (Spans 43 & 44) and Sheet A84 (Spans 45 & 46)
(1) Bend 24 WF 68 Stringer. See detail, Sheet A114

SHEET A 77

FRAMING
STRUCTURAL STEEL

COMMONWEALTH OF KENTUCKY
DEPARTMENT OF HIGHWAYS
FRANKFORT
COUNTY OF
JEFFERSON

I 64-13TH ST TO 7TH ST.
LOUISVILLE — LEXINGTON
ROAD

SP 56-273-11L

STATION 208+08 PROJECT NO. I 64-2(35)3

BRIDGE NUMBER	DRAWING NO.	INDEX
	18572	

DESIGNED BY JFK & AJR CHECKED BY
DETAILED BY TRL CHECKED BY
TRACED BY CHECKED BY
REVISED DATE
REVISED DATE
REVISED DATE

LETTING DATE

DESIGNED BY AJR CHECKED BY RocL DATE 11-10 REVISED
DETAILED BY CHECKED BY DATE REVISED
TRACED BY CHECKED BY DATE REVISED

Dimensions - Span 40

	Beam	a	b	c	d	s	ϕ_1	ϕ_2	ϕ_3	ϕ_4	ϕ_5
West Bound	S_7	97.220	24.615	24.603	23.399	1.216	91°46'18.7"	90°53'09.3"	89°59'59.9"	89°06'50.6"	91°43'41.3"
	G_3	97.677	24.731	24.718	23.509	1.222	↑	↑	↑	↑	↑
	S_5	98.248	24.876	24.863	23.645	1.229					
	S_3	98.818	25.020	25.007	23.783	1.236					
	G_1	99.388	25.164	25.151	23.921	1.243	↓	↓	↓	↓	↓
	S_1	99.845	25.280	25.267	24.030	1.249	91°46'18.7"	90°53'09.3"	89°59'59.9"	89°06'50.6"	91°43'41.3"
East Bound	S_2	100.137	25.042	25.027	–	–	92°00'00.0"	91°00'00.0"	90°00'00.0"	89°00'00.0"	92°00'00.0"
	G_2	100.660	25.173	25.157	–	–	↑	↑	↑	↑	↑
	S_4	101.312	25.336	25.320	–	–					
	S_6	101.963	25.499	25.483	–	–					
	G_4	102.615	25.661	25.646	–	–	↓	↓	↓	↓	↓
	S_8	103.138	25.792	25.777	–	–	92°00'00.0"	91°00'00.0"	90°00'00.0"	89°00'00.0"	92°00'00.0"

Floorbeam Dimension - Span 40

Floorbeam Nº	R & P	Z
VW18 & VW20	7.497	9.330
VW19	7.496	9.329
VW21	7.500	9.333
VE5 & VE7	7.497	9.329
VE6	7.495	9.328
VE8	7.500	9.333

Dimensions - Span 41

	Beam	a	b	c	d	s	ϕ_1	ϕ_2	ϕ_3	ϕ_4	ϕ_5
West Bound	S_7	76.565	18.233	19.442	19.448	1.216	91°21'22.4"	90°41'59.9"	89°59'59.9"	89°17'59.9"	91°24'00.1"
	G_3	76.925	18.317	19.534	19.540	1.222	↑	↑	↑	↑	↑
	S_5	77.374	18.424	19.648	19.654	1.229					
	S_3	77.824	18.532	19.762	19.768	1.236					
	G_1	78.273	18.639	19.876	19.882	1.243	↓	↓	↓	↓	↓
	S_1	78.633	18.724	19.968	19.973	1.249	91°21'22.4"	90°41'59.9"	89°59'59.9"	89°17'59.9"	91°24'00.1"
East Bound	S_2	68.851	23.369	23.365	22.117	1.252	91°24'00.0"	90°28'00.0"	89°32'00.0"	91°21'00.0"	–
	G_2	69.210	23.491	23.486	22.233	1.259	↑	↑	↑	↑	–
	S_4	69.659	23.644	23.638	22.377	1.267					–
	S_6	70.107	23.797	23.790	22.520	1.275					–
	G_4	70.555	23.948	23.943	22.664	1.283	↓	↓	↓	↓	–
	S_8	70.914	24.070	24.064	22.780	1.290	91°24'00.0"	90°28'00.0"	89°32'00.0"	91°21'00.0"	–

Floorbeam Dimensions - Span 41

Floorbeam Nº	R & P	Z
VW1	7.500	9.333
VW2 & VW4	7.498	9.331
VW3	7.498	9.330
VW5	7.500	9.333
VE9 & VE10	7.498	9.331
VE11	7.500	9.333

Dimensions - Span 42

	Beam	a	b	c	d	s	ϕ_1	ϕ_2	ϕ_3	ϕ_4	ϕ_5
West Bound	S_7	77.781	19.449	19.442	–	–	91°23'59.9"	90°41'59.9"	89°59'59.9"	89°17'59.9"	91°24'00.1"
	G_3	78.147	19.539	19.534	–	–	↑	↑	↑	↑	↑
	S_5	78.603	19.653	19.648	–	–					
	S_3	79.060	19.768	19.762	–	–					
	G_1	79.516	19.882	19.876	–	–	↓	↓	↓	↓	↓
	S_1	79.882	19.973	19.968	–	–	91°23'59.9"	90°41'59.9"	89°59'59.9"	89°17'59.9"	91°24'00.1"
East Bound	S_2	100.135	24.101	25.340	25.355	1.253	91°58'30.0"	91°00'45.1"	90°00'00.0"	88°59'15.1"	92°01'30.0"
	G_2	100.659	24.228	25.472	25.488	1.259	↑	↑	↑	↑	↑
	S_4	101.311	24.385	25.637	25.653	1.267					
	S_6	101.961	24.540	25.802	25.818	1.276					
	G_4	102.613	24.697	25.967	25.983	1.284	↓	↓	↓	↓	↓
	S_8	103.137	24.825	26.099	26.115	1.290	91°58'30.0"	91°00'45.1"	90°00'00.0"	88°59'15.1"	92°01'30.0"

Floorbeam Dimensions - Span 42

Floorbeam Nº	R & P	Z
VW6 & VW8	7.498	9.331
VW7	7.498	9.330
VW9	7.500	9.333
VE1	7.500	9.333
VE2 & VE4	7.496	9.328
VE3	7.495	9.328
VE5	7.500	9.333

Dimensions - Span 43

	Beam	a	b	c	d	s	ϕ_1	ϕ_2	ϕ_3	ϕ_4	ϕ_5	ϕ_6
West Bound	S_7	82.640	20.968	20.960	19.751	1.216	91°30'33.7"	90°45'16.8"	90°00'00.0"	89°14'43.1"	91°27'56.3"	–
	G_3	83.029	21.067	21.059	19.844	1.222	↑	↑	↑	↑	↑	–
	S_5	83.514	21.189	21.182	19.960	1.229						–
	S_3	83.999	21.314	21.304	20.076	1.236						–
	G_1	84.483	21.436	21.427	20.192	1.243	↓	↓	↓	↓	↓	–
	S_1	84.872	21.535	21.526	20.285	1.249	91°30'33.7"	90°45'16.8"	90°00'00.0"	89°14'43.1"	91°27'56.3"	–
East Bound	S_2	120.153	24.044	24.024	24.017	–	92°24'00.0"	91°26'24.0"	90°28'48.0"	89°31'12.0"	88°33'36.0"	92°24'00.0"
	G_2	120.781	24.169	24.150	24.143	–	↑	↑	↑	↑	↑	↑
	S_4	121.563	24.326	24.306	24.299	–						
	S_6	122.345	24.483	24.462	24.455	–						
	G_4	123.127	24.640	24.618	24.611	–	↓	↓	↓	↓	↓	↓
	S_8	123.755	24.765	24.744	24.737	–	92°24'00.0"	91°26'24.0"	90°28'48.0"	89°31'12.0"	88°33'36.0"	92°24'00.0"

Floorbeam Dimensions - Span 43

Floorbeam Nº	R & P	Z
VW10 & VW12	7.498	9.331
VW11	7.497	9.330
VW13	7.500	9.333
VE6 & VE9	7.496	9.328
VE7 & VE8	7.494	9.325
VE10	7.500	9.333

Floorbeam Dimensions - Span 44

Floorbeam Nº	R & P	Z
VW1 & VW4	7.500	9.333
VW2 & VW3	7.498	9.331
VE11 & VE13	7.497	9.328
VE12	7.495	9.328
VE14	7.500	9.333

Dimensions - Span 44

	Beam	a	b	c	d	s	ϕ_1	ϕ_2	ϕ_3	ϕ_4	ϕ_5
West Bound	S_7	71.092	22.888	24.100	24.104	1.216	91°15'27.8"	90°26'01.7"	89°33'58.2"	91°18'05.4"	–
	G_3	71.428	22.997	24.213	24.218	1.221	↑	↑	↑	↑	–
	S_5	71.849	23.131	24.354	24.359	1.229					–
	S_3	72.261	23.265	24.496	24.500	1.236					–
	G_1	72.678	23.399	24.637	24.642	1.243	↓	↓	↓	↓	–
	S_1	73.012	23.506	24.751	24.755	1.249	91°15'27.8"	90°26'01.7"	89°33'58.2"	91°18'05.4"	–
East Bound	S_2	100.137	25.041	25.027	–	0.751	92°00'00.0"	91°00'00.0"	90°00'00.0"	89°00'00.0"	92°00'00.0"
	G_2	100.660	25.173	25.157	–	0.755	↑	↑	↑	↑	↑
	S_4	101.312	25.336	25.320	–	0.760					
	S_6	101.963	25.498	25.483	–	0.765					
	G_4	102.615	25.662	25.646	–	0.770	↓	↓	↓	↓	↓
	S_8	103.138	25.792	25.777	–	0.774	92°00'00.0"	91°00'00.0"	90°00'00.0"	89°00'00.0"	92°00'00.0"

FRAMING
STRUCTURAL STEEL

SHEET A78

COMMONWEALTH OF KENTUCKY
DEPARTMENT OF HIGHWAYS
FRANKFORT
COUNTY OF
JEFFERSON

I64-13TH ST. TO 7TH ST.
LOUISVILLE — LEXINGTON
ROAD SP 56-273-IIL

STATION 208+08 **P. E. PROJECT NO.** I 64-2(35)3

CONSTRUCTION PROJECT NO.	MAINTENANCE PROJECT NO.	DRAWING NO.
		18572

FED. ROAD DIST.	STATE	FED. AID PROJ. NO.	FISCAL YEAR	SHEET NO.	TOTAL SHEETS
7	KY.				

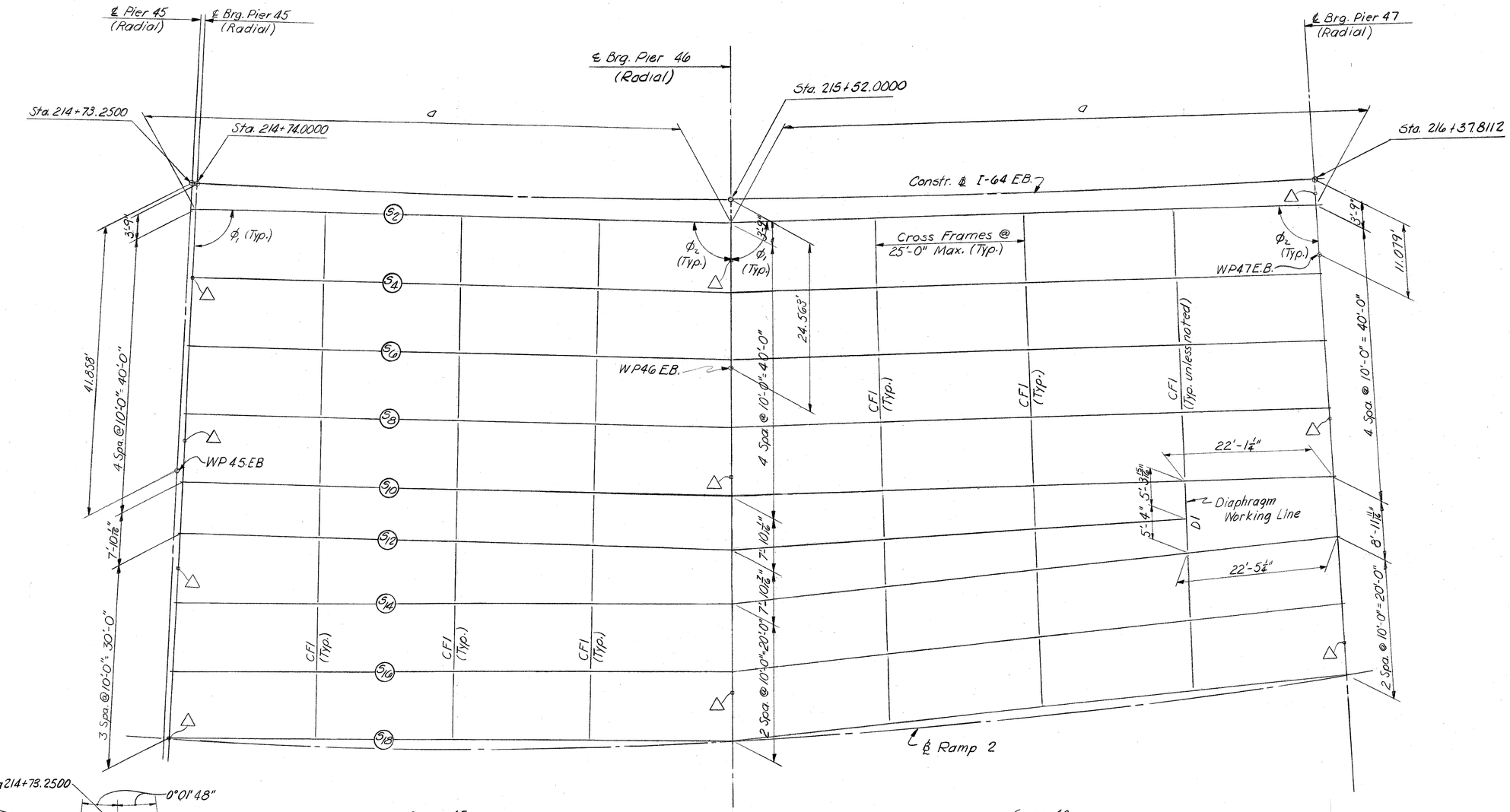

Span 45
UNIT VII (E.B.)

Span 46
UNIT VII (E.B.)

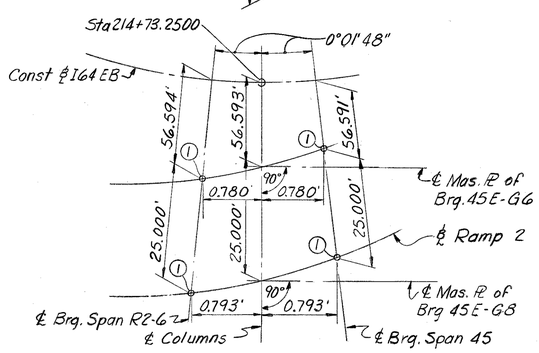

GEOMETRICS FOR BEARINGS 45E-G6 & -G8
(For Main Line Bearings see Sheet A76)

① Intersection of longitudinal and transverse ℄ of Rocker and Sole R.

Framing notes
For dimensions and angles see sheet A84
All dimensions shown are horizontal and shall be corrected for grade where applicable.

△ indicates Bearing under Pier Girder.

FRAMING
STRUCTURAL STEEL

SHEET A79

COMMONWEALTH OF KENTUCKY
DEPARTMENT OF HIGHWAYS
FRANKFORT
COUNTY OF
JEFFERSON

I64-13TH ST. TO 7TH ST.
LOUISVILLE — LEXINGTON ROAD

STATION 208+08 PROJECT NO. I 64-2(35)3 SP 56-273-11L

BRIDGE NUMBER	DRAWING NO.	INDEX
	18572	

DESIGNED BY: DATE: REVISED: DATE:
DETAILED BY: A.J.R. CHECKED BY: DATE 9/70 REVISED: DATE:
TRACED BY: CHECKED BY: DATE: REVISED: DATE:

FED. ROAD DIST.	STATE	FED. AID PROJ. NO.	FISCAL YEAR	SHEET NO.	TOTAL SHEETS
7	KY.				

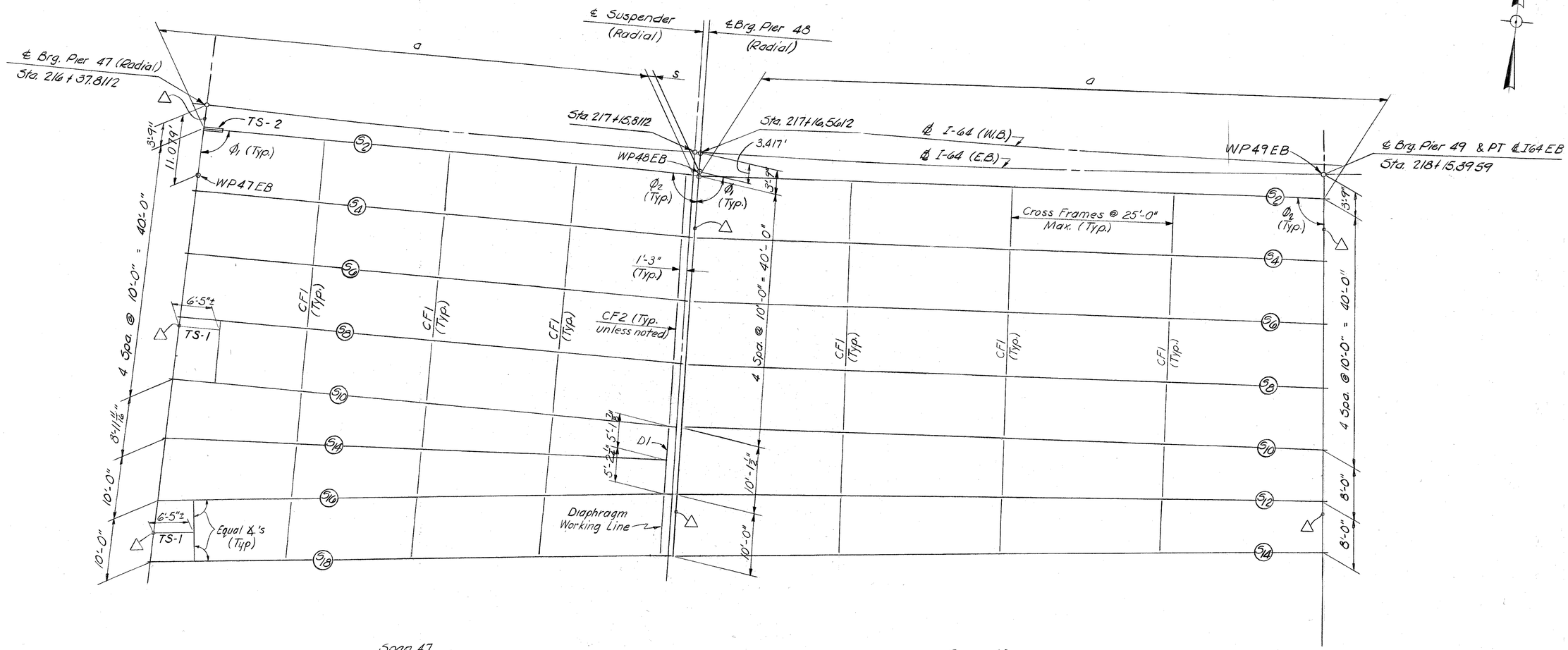

Span 47
UNIT III (EB)

Span 48
UNIT III (EB)

For Framing notes see sheet A79
For dimensions and angles see Sheet A84

SHEET A80

FRAMING
STRUCTURAL STEEL

COMMONWEALTH OF KENTUCKY
DEPARTMENT OF HIGHWAYS
FRANKFORT
COUNTY OF
JEFFERSON

I64-13TH ST. TO 7TH ST.
LOUISVILLE – LEXINGTON
ROAD SP 56-273-11L

STATION 208+08 **PROJECT NO.** I 64-2(35)3

BRIDGE NUMBER	DRAWING NO.	INDEX
	18572	

DESIGNED BY
DETAILED BY A J R
TRACED BY
CHECKED BY
CHECKED BY R. Lee
CHECKED BY
DATE
DATE 4/70
DATE
REVISED
REVISED
REVISED
DATE
DATE
DATE

FED. ROAD DIST.	STATE	FED. AID PRO. NO.	FISCAL YEAR	SHEET NO.	TOTAL SHEETS
7	KY.				

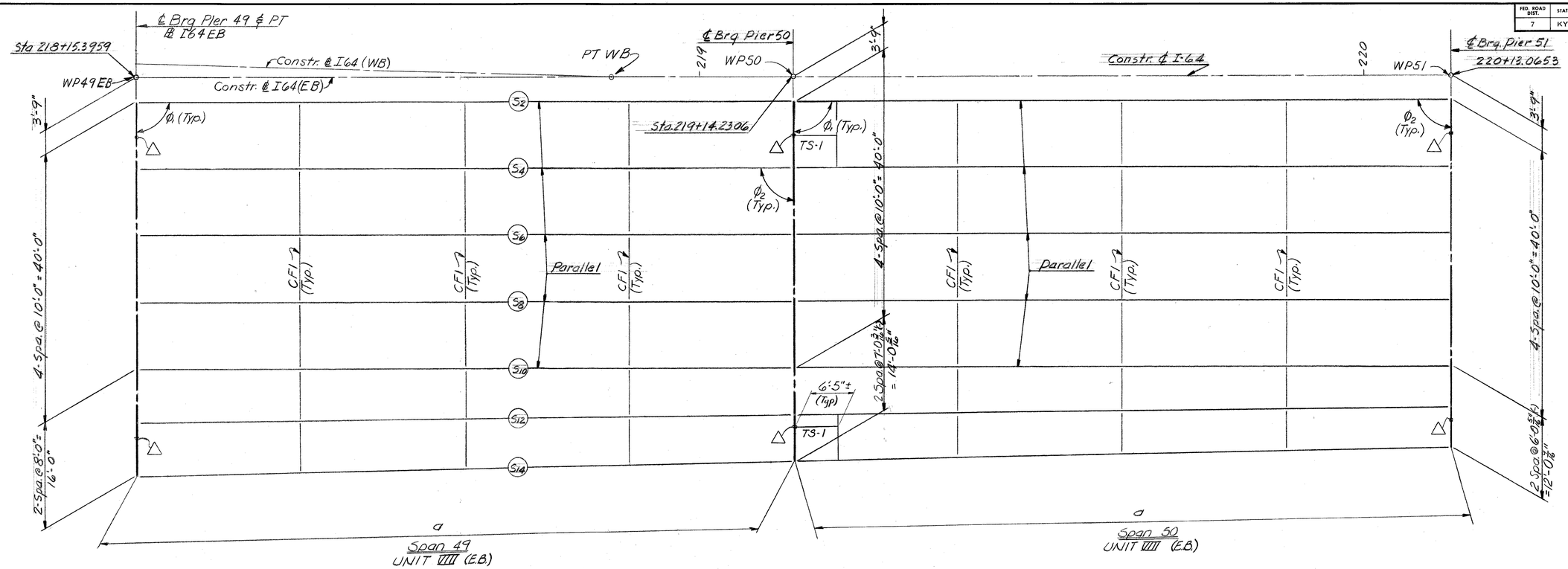

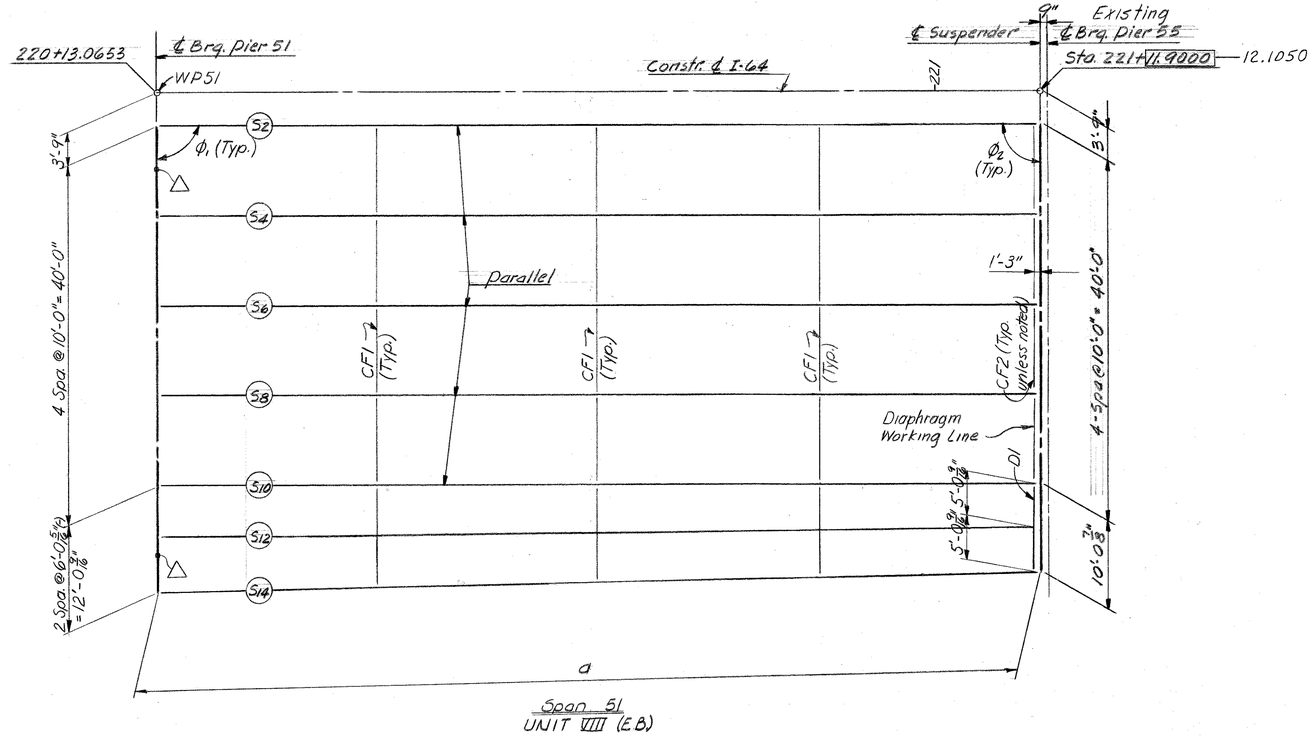

For Framing notes see Sheet A79
For dimensions and angles see Sheet A84

SHEET A81

FRAMING
STRUCTURAL STEEL

COMMONWEALTH OF KENTUCKY
DEPARTMENT OF HIGHWAYS
FRANKFORT
COUNTY OF
JEFFERSON

I64-13TH ST. TO 7TH ST.
LOUISVILLE – LEXINGTON
ROAD

STATION 208+08 **PROJECT NO.** I64-2(35)3 SP 56-273-11L

BRIDGE NUMBER	DRAWING NO.	INDEX
	18572	

DESIGNED BY JFK & AJR CHECKED BY TRL DATE 9/70
DETAILED BY JFK & AJR CHECKED BY TRL DATE 9/70
TRACED BY CHECKED BY DATE
REVISED ℄ Suspender Sta. JRB DATE 6/5/73
REVISED DATE
REVISED DATE

FED. ROAD DIST.	STATE	FED. AID PRO. NO.	FISCAL YEAR	SHEET NO.	TOTAL SHEETS
7	KY.				

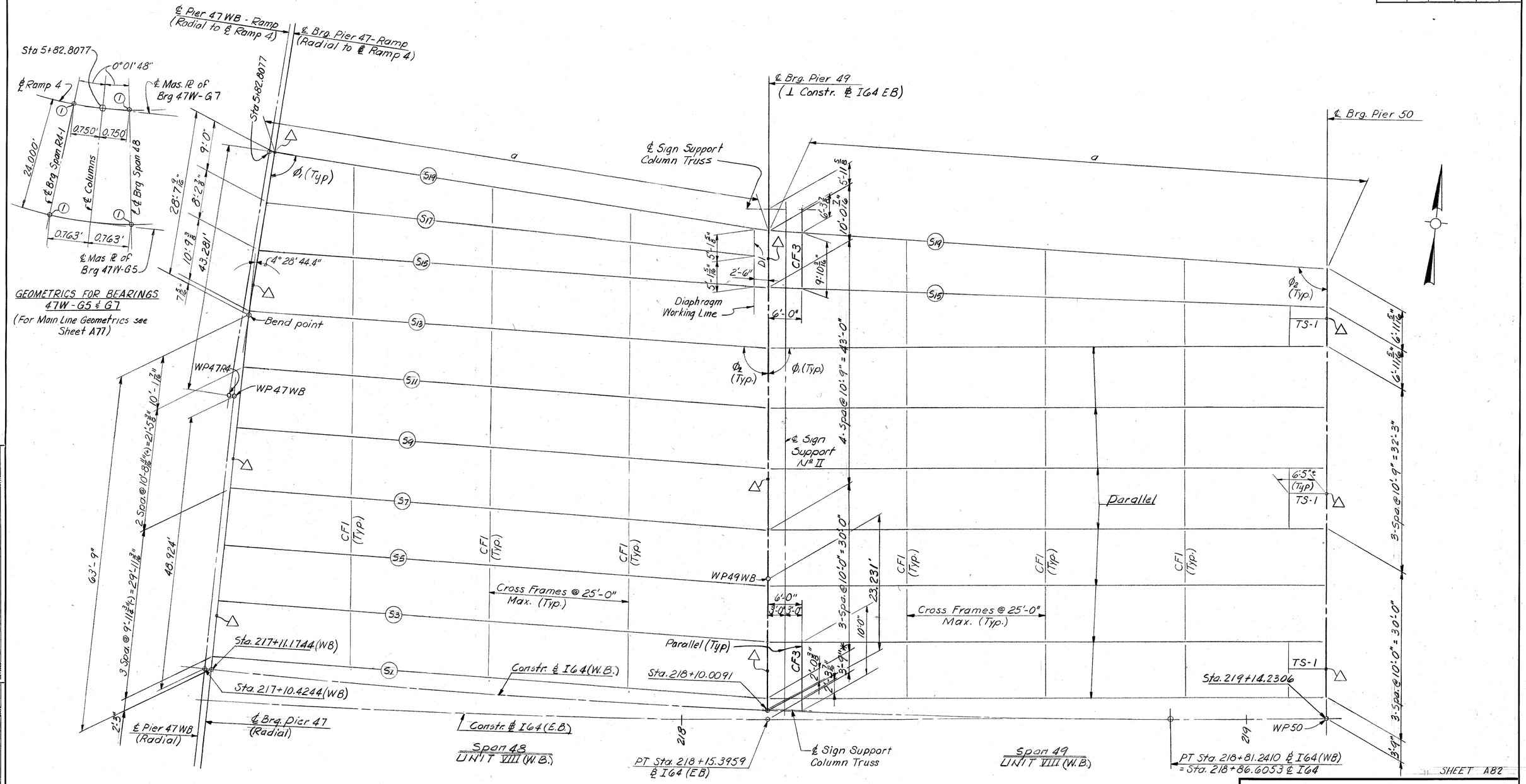

GEOMETRICS FOR BEARINGS
47W-G5 & G7
(For Main Line Geometrics see Sheet A77)

① Intersection of longitudinal and transverse ℄ of Rocker and Sole ℞.

*Steel fabricated to this dimension. Steel was erected with this dimension 5'-3 9/16". Splices at 49W.B. & 50W.B. were modified per Sht. A151.

For Framing notes see Sheet A79
For dimensions and angles see Sheet A84

FRAMING
STRUCTURAL STEEL

DESIGNED BY AJR CHECKED BY
DETAILED BY CHECKED BY
TRACED BY CHECKED BY
REVISED Pier 49W.B.* DATE 4-75
REVISED DATE
REVISED DATE
REVISED DATE

COMMONWEALTH OF KENTUCKY
DEPARTMENT OF HIGHWAYS
FRANKFORT
COUNTY OF
JEFFERSON
I64-13TH ST. TO 7TH ST.
LOUISVILLE-LEXINGTON ROAD
SP 56-273-11L
STATION 208+08
PROJECT NO. I 64-2(35)3
BRIDGE NUMBER
DRAWING NO. 18572
INDEX

FED. ROAD DIST.	STATE	FED. AID PRO. NO.	FISCAL YEAR	SHEET NO.	TOTAL SHEETS
7	KY.				

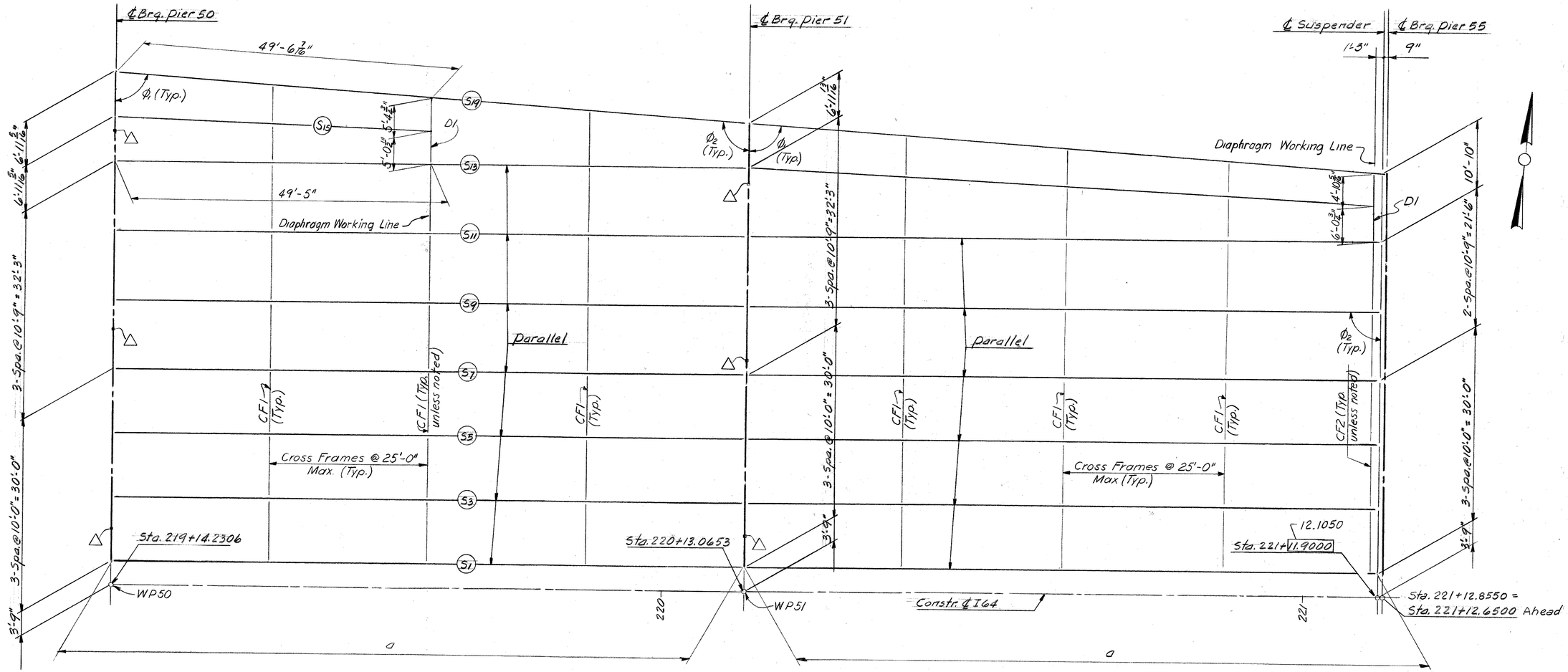

Span 50
UNIT VIII (W.B.)

Span 51
UNIT VIII (W.B.)

For Framing notes see Sheet A79
For dimensions and angles see Sheet A84

SHEET A83

FRAMING
STRUCTURAL STEEL

COMMONWEALTH OF KENTUCKY
DEPARTMENT OF HIGHWAYS
FRANKFORT
COUNTY OF
JEFFERSON

I64-13TH ST. TO 7TH ST.
LOUISVILLE – LEXINGTON
ROAD

STATION 208+08 — PROJECT NO. I 64-2(35)3 — SP 56-273-111

BRIDGE NUMBER	DRAWING NO.	INDEX
	18572	

DESIGNED BY ... CHECKED BY ... DATE ... REVISED ... Stations at End of Contract ... DATE 6/5/13 ... JRB
DETAILED BY AJR & JFK ... CHECKED BY R. ... DATE 9/70 ... REVISED ... DATE ...
TRACED BY ... CHECKED BY ... DATE ... REVISED ... DATE ...

LETTING DATE

Dimensions - Span 45

	Beam	a	b	c				ϕ_1	ϕ_2	ϕ_3	ϕ_4
West Bound	S_7	67.574	22.526	22.522				91°12'58.5"	90°24'19.5"	89°35'40.5"	91°12'58.6"
	G_3	67.892	22.632	22.628				↕	↕	↕	↕
	S_5	68.288	22.764	22.760							
	S_3	68.685	22.897	22.892							
	G_1	69.081	23.029	23.024							
	S_1	69.399	23.135	23.130				91°12'58.5"	90°24'19.5"	89°35'40.5"	91°12'58.6"
East Bound	S_2	78.195	—	—				91°33'36.0"	91°33'36.0"	—	—
	S_4	78.739	—	—				↕	↕	—	—
	S_6	79.283	—	—						—	—
	S_8	79.828	—	—						—	—
	S_{10}	80.372	—	—						—	—
	S_{12}	80.799	—	—				91°33'36.0"	91°33'36.0"	—	—
	S_{14}	81.314	—	—				93°03'35.2"	90°03'36.8"	—	—
	S_{16}	81.858	—	—				93°02'59.2"	90°04'12.8"	—	—
	S_{18}	82.402	—	—				93°02'23.8"	90°04'48.2"	—	—

Floorbeam Dimensions - Span 45

Floorbeam Nº	R	Z	Y	X
VII W4 & W7	7.500	9.333	—	—
VII W5 & W6	7.499	9.331	—	—

Dimensions - Span 46

	Beam	a	b	c	S	ϕ_1	ϕ_2	ϕ_3	ϕ_4
West Bound	S_7	67.574	22.526	22.522	0.728	91°12'58.5"	90°24'19.5"	89°35'40.5"	91°12'58.6"
	G_3	67.892	22.632	22.628	0.732	↕	↕	↕	↕
	S_5	68.288	22.764	22.760	0.736				
	S_3	68.685	22.897	22.892	0.741				
	G_1	69.081	23.029	23.024	0.745				
	S_1	69.399	23.135	23.130	0.749	91°12'58.5"	90°24'19.5"	89°35'40.5"	91°12'58.6"
East Bound	S_2	86.023	—	—	—	91°42'58.4"	91°42'58.4"	—	—
	S_4	86.622	—	—	—	↕	↕	—	—
	S_6	87.221	—	—	—			—	—
	S_8	87.820	—	—	—			—	—
	S_{10}	88.419	—	—	—	91°42'58.4"	91° 42'58.4"	—	—
	S_{12}	66.596*	—	—	—	93°52'23.2"	—	—	—
	S_{14}	89.412	—	—	—	96°02'05.4"	87°23'51.1"	—	—
	S_{16}	90.009	—	—	—	96°00'22.1"	87°25'34.5"	—	—
	S_{18}	90.607	—	—	—	95°58'40.1"	87°27'16.5"	—	—

*℄ Brg. to Diaphragm DI Working Line

Floorbeam Dimensions - Span 46

Floorbeam Nº	R	Z	X	Y
VII W7 & W10	7.500	9.333	—	—
VII W8 & W9	7.499	9.331	—	—

Dimensions - Span 48

	Beam	a	ϕ_1	ϕ_2
West Bound	S_{19}	87.817	91°31'17.3"	98°54'35.5"
	S_{17}	86.410*	94°07'28.1"	
	S_{15}	90.127	96°10'36.8"	94°15'16.0"
	S_{13}	92.084	96°10'36.0"	94°15'16.8"
	S_{11}	93.247	91°41'50.8"	94°15'17.6"
	S_9	94.363	91°41'52.8"	94°15'15.6"
	S_7	95.478	91°41'52.6"	94°15'15.8"
	S_5	96.515	91°41'50.8	94°15'17.6"
	S_3	97.553	91°41'51.2"	94°15'17.2"
	S_1	98.590	91°41'51.6"	94°15'16.8"
East Bound	S_2	99.074	91°58'36.2"	91°58'36.2"
	S_4	99.764	↕	↕
	S_6	100.454		
	S_8	101.144		
	S_{10}	101.834	91°58'36.2"	91°58'36.2"
	S_{12}	102.481	93°09'47.0"	90°47'25.4"
	S_{14}	103.162	94°15'55.1"	89°41'17.3"

*From ℄ Brg. to Diaphragm DI Working Line

Ⓐ Angles ϕ_1 & ϕ_2 have changed. See Sht. A82. The angles are indeterminate for the erected position. Field-measure if needed.

Dimensions Span 47

	Beam	a	s	ϕ_1	ϕ_2
East Bound	S_2	78.194	0.752	91°34'30.0"	91°34'30.0"
	S_4	78.738	0.757	↕	↕
	S_6	79.283	0.763		
	S_8	79.827	0.768		
	S_{10}	80.372	0.773	91°34'30.0"	91°34'30.0"
	S_{14}	79.599*	—	94°19'20.6"	—
	S_{16}	81.641	0.781	97°44'17.0" ‡	85°24'42.8"
	S_{18}	82.182	0.786	97°41'50.4"	85°27'09.6"

*℄ Brg. to Diaphragm DI Working Line

‡ 5/8" ⌀ must engage 12 bolts of bottom flange splice. See Sheet A139

Dimensions - Span 49

	Beam	a	ϕ_1	ϕ_2
West Bound	S_{19}	99.075	86°00'20.0"	93°59'40.0"
	S_{15}	98.908	87°37'39.8"	92°12'20.2"
	S_{13}	98.835	90°00'00"	90°00'00"
	S_{11}	↕	↕	↕
	S_9			
	S_7			
	S_5			
	S_3			
	S_1	98.835	90°00'00"	90°00'00"
East Bound	S_2	98.835	90°00'00"	90°00'00"
	S_4	↕	↕	↕
	S_6			
	S_8			
	S_{10}	98.835	90°00'00"	90°00'00"
	S_{12}	98.840	90°34'22.5"	89°25'37.5"
	S_{14}	98.855	91°08'44.7"	88°51'15.3"

Dimensions - Span 50

	Beam	a	ϕ_1	ϕ_2
West Bound	S_{19}	99.075	86°00'20.5"	93°59'39.5"
	S_{15}	49.454*	87°47'38.9"	—
	S_{13}	98.835	90°00'00"	90°00'00"
	S_{11}	↕	↕	↕
	S_9			
	S_7			
	S_5			
	S_3			
	S_1	98.835	90°00'00"	90°00'00"
East Bound	S_2	↕	↕	↕
	S_4			
	S_6			
	S_8			
	S_{10}	98.835	90°00'00"	90°00'00"
	S_{12}	98.840	90°34'22.5"	89°25'37.5"
	S_{14}	98.855	91°08'44.7"	88°51'15.3"

*From ℄ Brg. to Diaphragm DI Working Line

Dimensions - Span 51

	Beam	a	ϕ_1	ϕ_2
	S_{19}	99.075	86°00'20.5"	93°59'39.5"
	S_{13}	97.698*	87°14'54.5"	
West Bound	S_{11}	98.835	90°00'00"	90°00'00"
	S_9	↕	↕	↕
	S_7			
	S_5			
	S_3			
	S_1			
East Bound	S_2			
	S_4			
	S_6			
	S_8			
	S_{10}	98.835	90°00'00"	90°00'00"
	S_{12}	97.590*	90°34'22.5"	
	S_{14}	98.855	91°08'44.7"	88°51'15.3"

99.280 — S_{19}; 97.903* — S_{13}; 99.040 — S_{11}; 99.040 — S_{10}; 97.795* — S_{12}

*From ℄ Brg. Pier 51 to Diaphragm DI Working Line
99.060

SHEET A84

FRAMING
STRUCTURAL STEEL

COMMONWEALTH OF KENTUCKY
DEPARTMENT OF HIGHWAYS
FRANKFORT
COUNTY OF
JEFFERSON

I 64-13TH ST. TO 7TH ST.
LOUISVILLE—LEXINGTON
ROAD SP 56-273-11L

STATION 208+08 **P. E. PROJECT NO.** I 64-2(35)3

CONSTRUCTION PROJECT NO.	MAINTENANCE PROJECT NO.	DRAWING NO.
		18572

DESIGNED BY JEB DATE 6/5/13
DETAILED BY JEK DATE 4-15
TRACED BY DATE
CHECKED BY DATE
CHECKED BY TJ DATE 9/10
CHECKED BY DATE
REVISED Dimension 'a' Span 51
REVISED Pier 49 (A)
REVISED DATE
REVISED DATE

FED. ROAD DIST.	STATE	FED. AID PRO. NO.	FISCAL YEAR	SHEET NO.	TOTAL SHEETS
7	KY.				

NOTE: Contractor shall verify existing suspender dimensions before fabricating this end of girders.

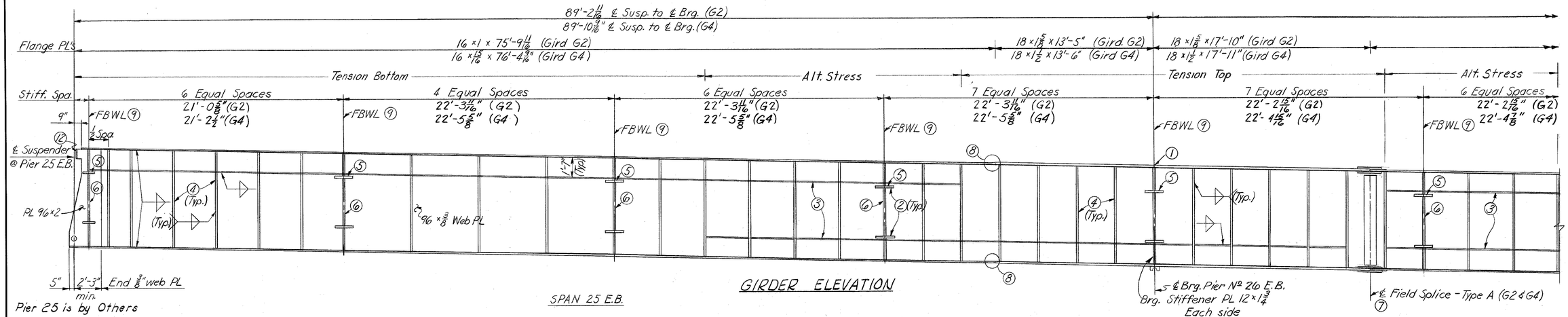

GIRDER ELEVATION

SPAN 25 E.B.

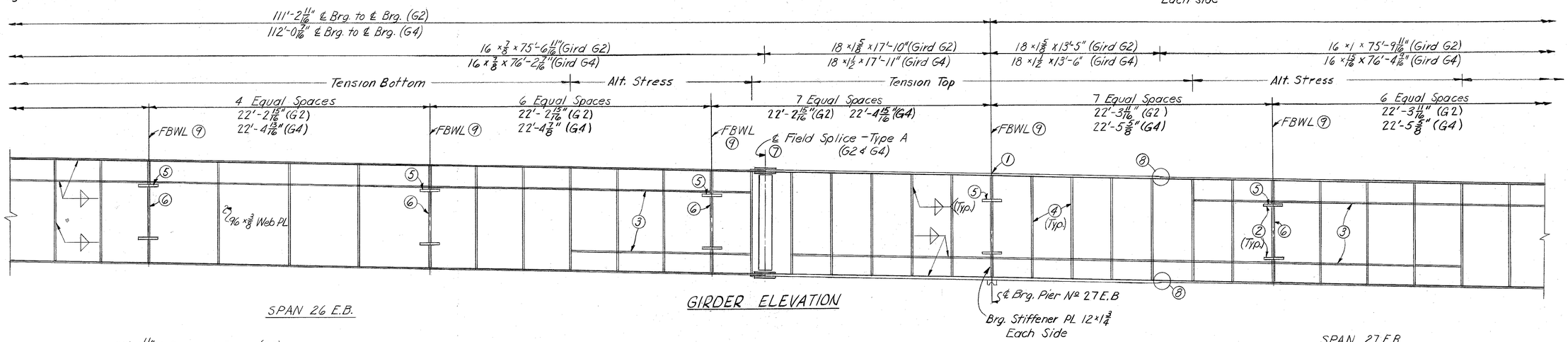

SPAN 26 E.B.

GIRDER ELEVATION

SPAN 27 E.B.

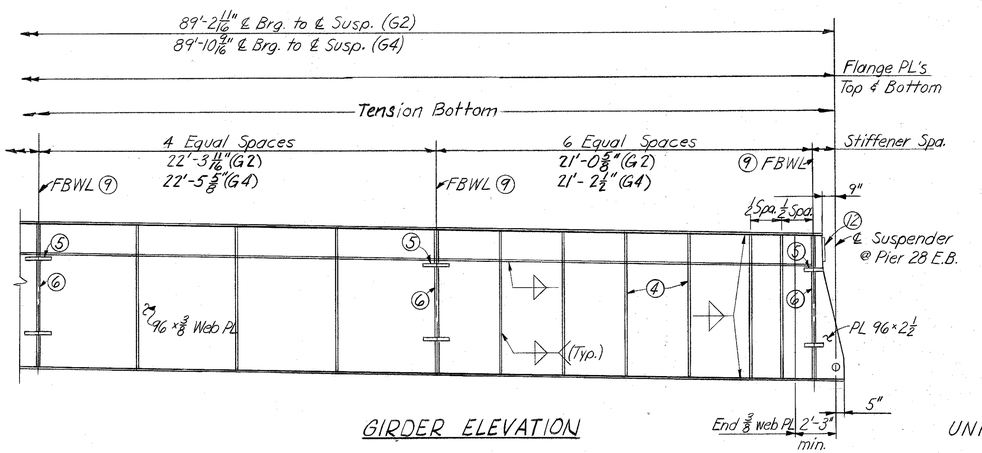

GIRDER ELEVATION

UNIT I E.B. GIRDERS G2 & G4
STRUCTURAL STEEL

NOTES:

Shop welded web splices shall be preferably in middle of stiffener panel, but not less than 1'-0" from a stiffener (unless shown).

For butt weld of flange plates and flange to web weld details see Sh. A95

For typ. detail of interior and brg. stiffener see Sh. A87

All Brg Stiffeners and Floor Beam Webs are vertical.

All steel this sheet A441 for 3/4" thick and under, A588 over 3/4" thickness (Unless noted)

1. For detail of Angled Flange PL's see Sheet A91.
2. For Floorbeam connection plates see Floorbeam Details
3. 5 × 3/8 Longitudinal Stiffener on interior side of Girder (A36 steel)
4. 5 1/2 × 3/8 Stiffener PL's (Typ.), (A36 steel) (1 Each side)
5. Slot Girder web for top Floorbeam connection PL
6. Stiffener and Floorbeam flange connection PL to be A441 steel
7. For Field Splice detail see Sheet A101
8. For butt weld detail see AWS 3, current edition.
9. For type of Floorbeam see Framing Plans. For the Girder-Floorbeam detail see Floorbeam details.
10. Stiffener 7 1/2" wide on cantilever side and 9" wide on interior side
11. Stiffener 8 1/2" wide on cantilever side and 9" wide on interior side
12. 3/8" PL, A36, See Expansion Dam Details

SHEET A85

COMMONWEALTH OF KENTUCKY
DEPARTMENT OF HIGHWAYS
FRANKFORT
COUNTY OF
JEFFERSON

I64-13TH ST. TO 7TH ST.
LOUISVILLE — LEXINGTON ROAD

STATION 208+08 | PROJECT NO. I 64-2(35)3 | SP 56-273-11L

BRIDGE NUMBER | DRAWING NO. 18572 | INDEX

DESIGNED BY AUR & JMB | CHECKED BY TJBS | DATE 2/71 | REVISED | DATE
DETAILED BY | CHECKED BY | DATE | REVISED | DATE
TRACED BY | CHECKED BY | DATE | REVISED | DATE

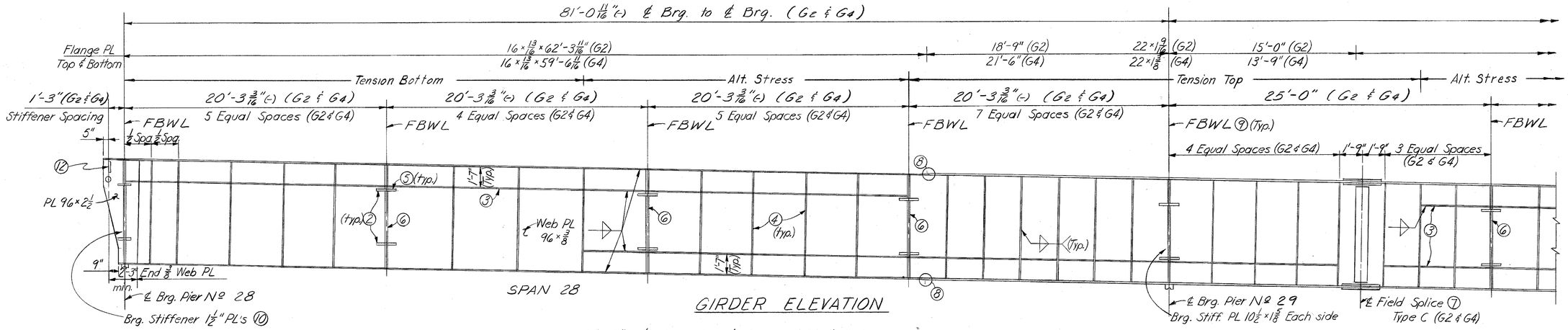

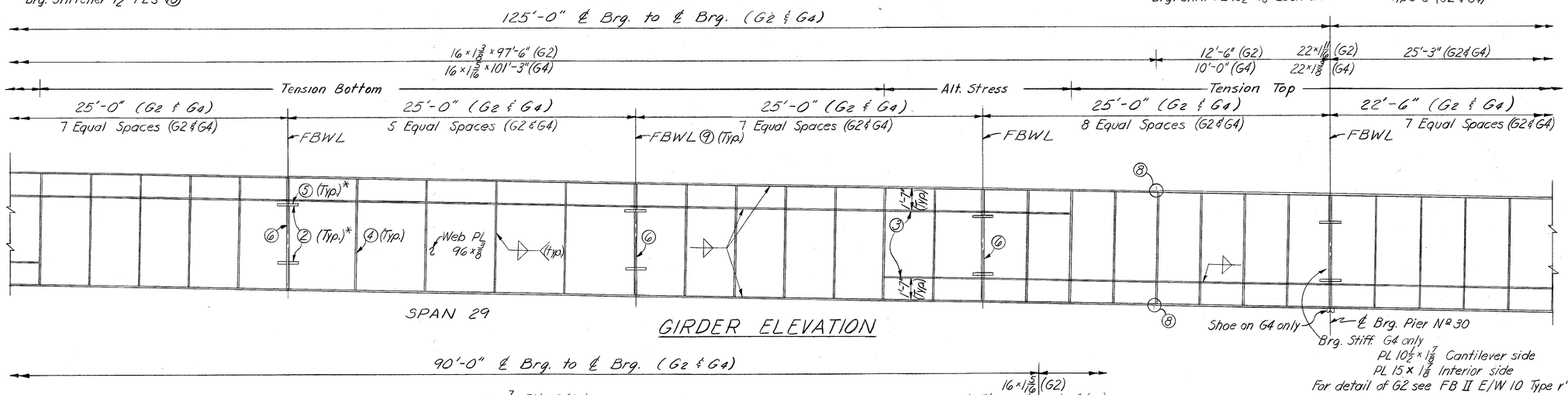

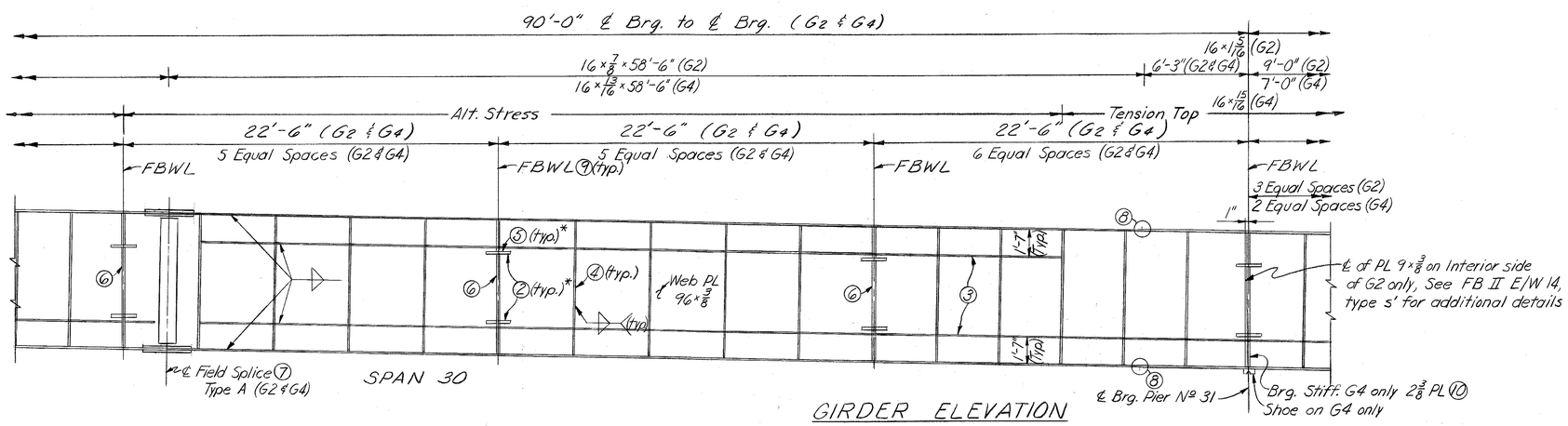

Notes

*Except G2 at Piers 30 and 31
All steel this sheet A441 for 3/4" thickness and under and A588 over 3/4" thickness (Unless noted)
For notes (1)-(12) see Sheet A85

SHEET A86

UNIT II E.B. GIRD. G2 & G4

STRUCTURAL STEEL

COMMONWEALTH OF KENTUCKY
DEPARTMENT OF HIGHWAYS
FRANKFORT
COUNTY OF
JEFFERSON

I 64-13TH ST. TO 7TH ST.
LOUISVILLE-LEXINGTON ROAD

STATION 208+08 | P.E. PROJECT NO. I 64-2(35)3 | SP 56-273-11 IL

CONSTRUCTION PROJECT NO.	MAINTENANCE PROJECT NO.	DRAWING NO.
		18572

LETTING DATE

DESIGNED BY GMA & JMB CHECKED BY 12B5 DATE 2/71 REVISED
DETAILED BY CHECKED BY DATE REVISED
TRACED BY CHECKED BY DATE REVISED

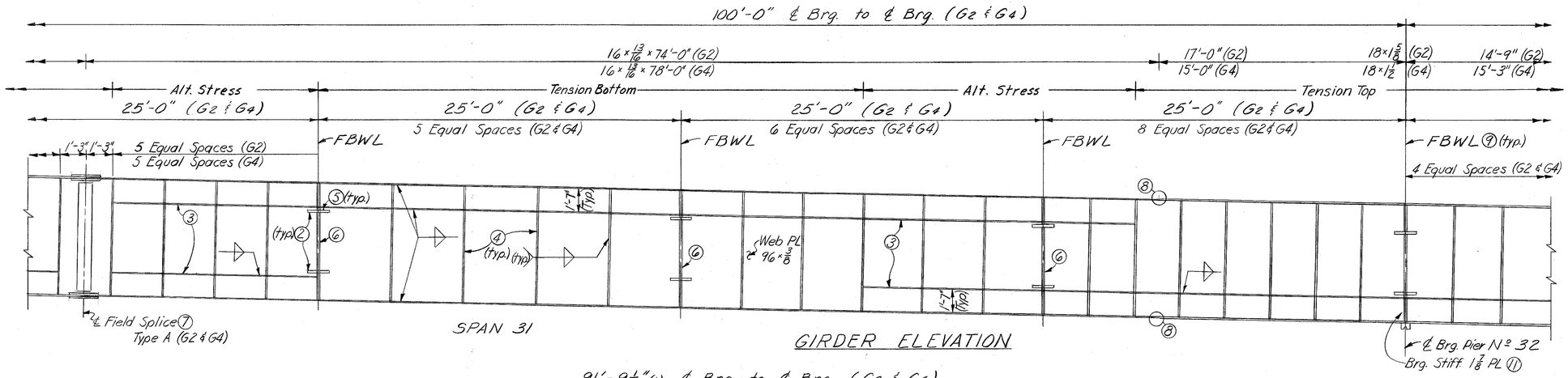

GIRDER ELEVATION

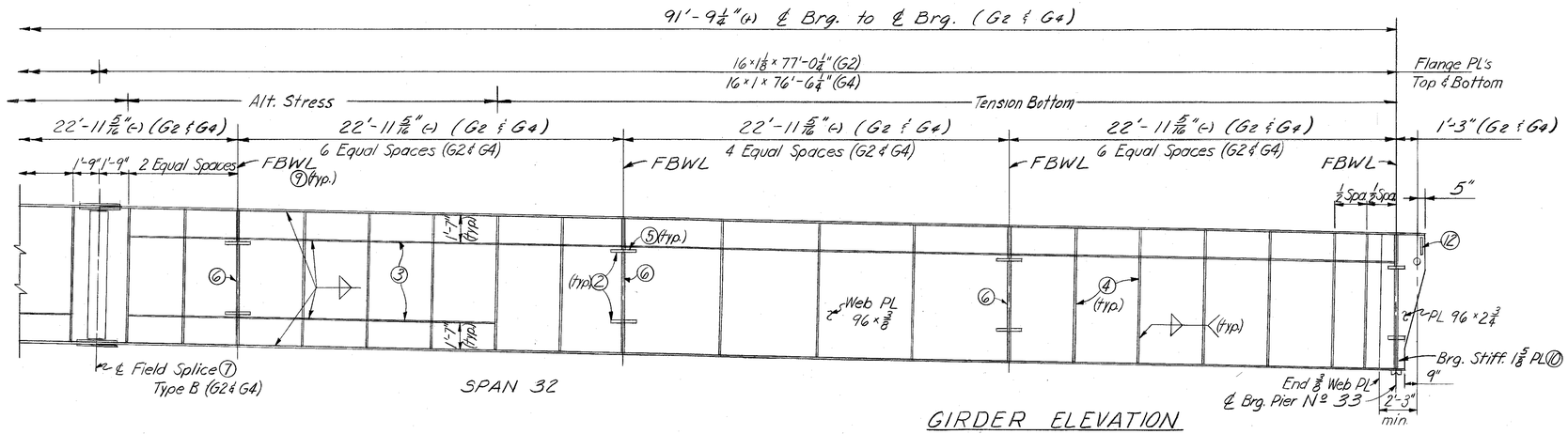

GIRDER ELEVATION

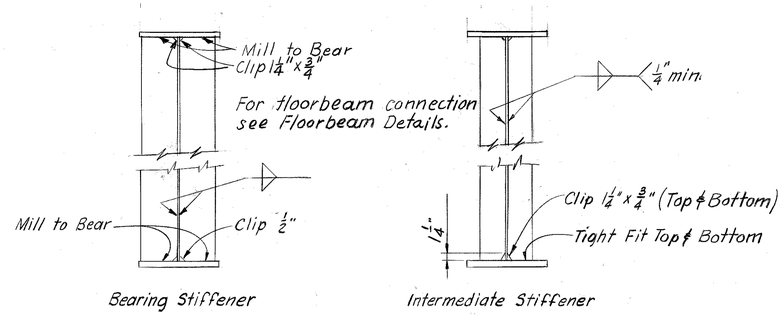

GIRDER STIFFENER DETAILS
(Typical All Units)

Notes

All steel this sheet A441 for 3/4" thickness and under and A588 over 3/4" thickness (Unless noted)
For notes ①-⑫ see Sheet A85

SHEET A87

UNIT II E.B. GIRDERS G2 & G4
STRUCTURAL STEEL

COMMONWEALTH OF KENTUCKY
DEPARTMENT OF HIGHWAYS
FRANKFORT
COUNTY OF
JEFFERSON

I 64-13TH ST. TO 7TH ST.
LOUISVILLE – LEXINGTON
ROAD SP 56-273-11L

STATION 208+08 **P. E. PROJECT NO.** I 64-2 (35) 3

CONSTRUCTION PROJECT NO.	MAINTENANCE PROJECT NO.	DRAWING NO.
		18572

LETTING DATE

DESIGNED BY: J.M.A. & J.M.B. CHECKED BY: RBS DATE 2/71 REVISED
DETAILED BY: CHECKED BY: DATE REVISED
TRACED BY: CHECKED BY: DATE REVISED

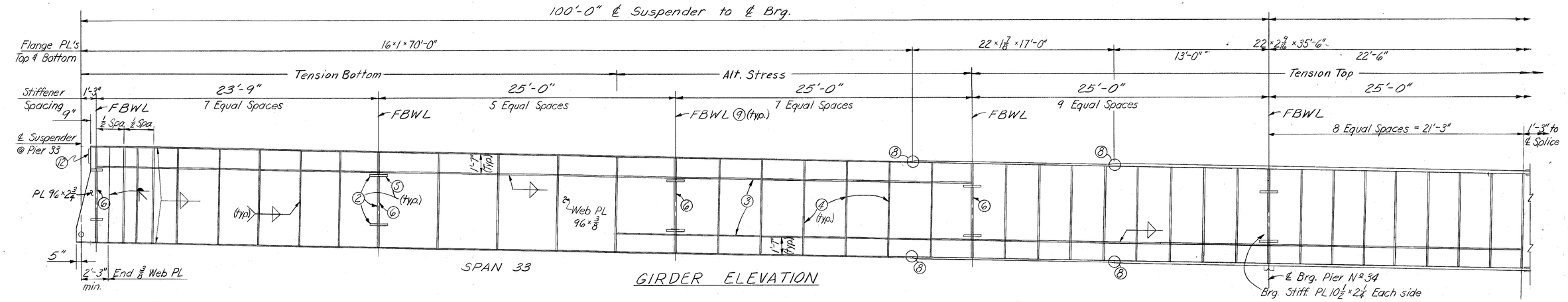

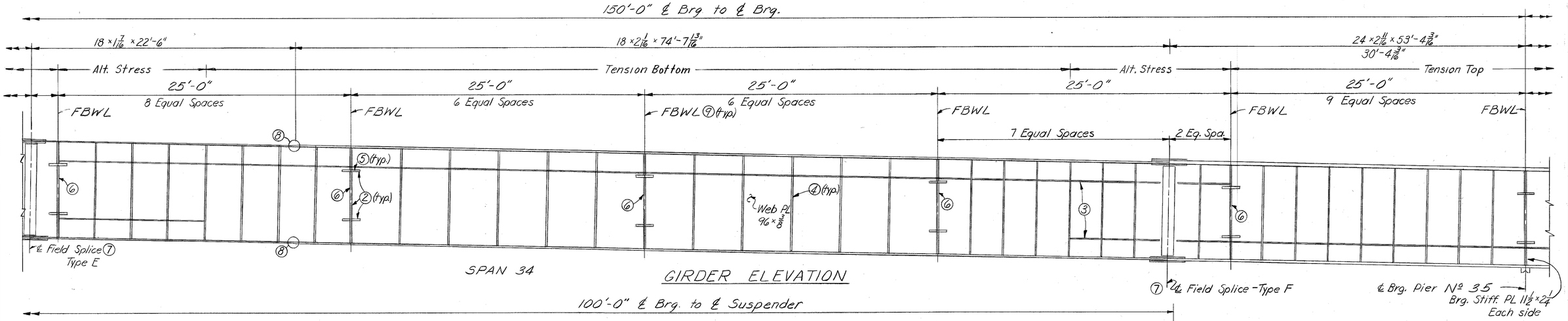

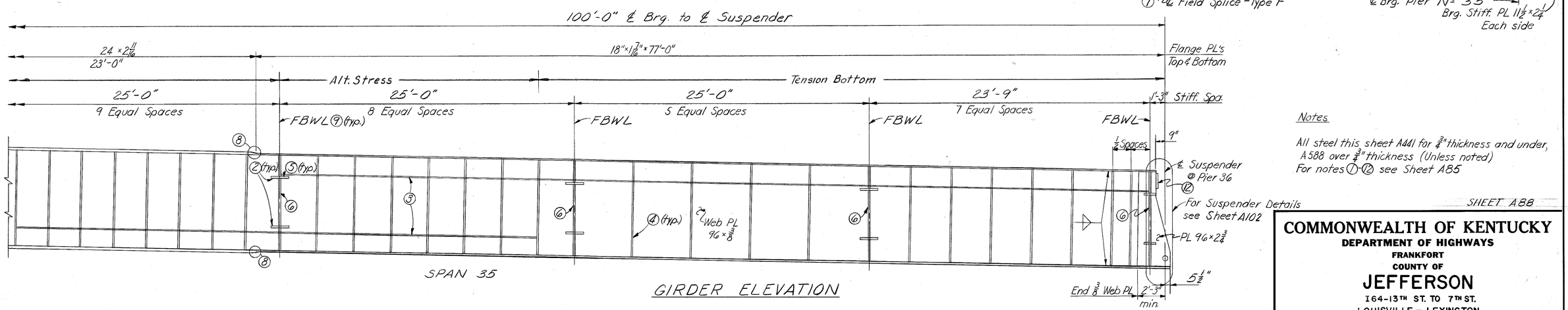

Notes

All steel this sheet A441 for ¾" thickness and under, A588 over ¾" thickness (Unless noted)
For notes ①-⑫ see Sheet A85

SHEET A88

UNIT III E.B. GIRD. G2

STRUCTURAL STEEL

COMMONWEALTH OF KENTUCKY
DEPARTMENT OF HIGHWAYS
FRANKFORT
COUNTY OF
JEFFERSON
I 64-13TH ST. TO 7TH ST.
LOUISVILLE — LEXINGTON ROAD
SP 56-273-11L
STATION 208+08
P. E. PROJECT NO. I 64-2 (35) 3

CONSTRUCTION PROJECT NO.	MAINTENANCE PROJECT NO.	DRAWING NO.
		18572

LETTING DATE

DESIGNED BY RMA & JMB CHECKED BY
DETAILED BY FBS CHECKED BY
TRACED BY CHECKED BY
DATE 2/71 REVISED
DATE REVISED
DATE REVISED

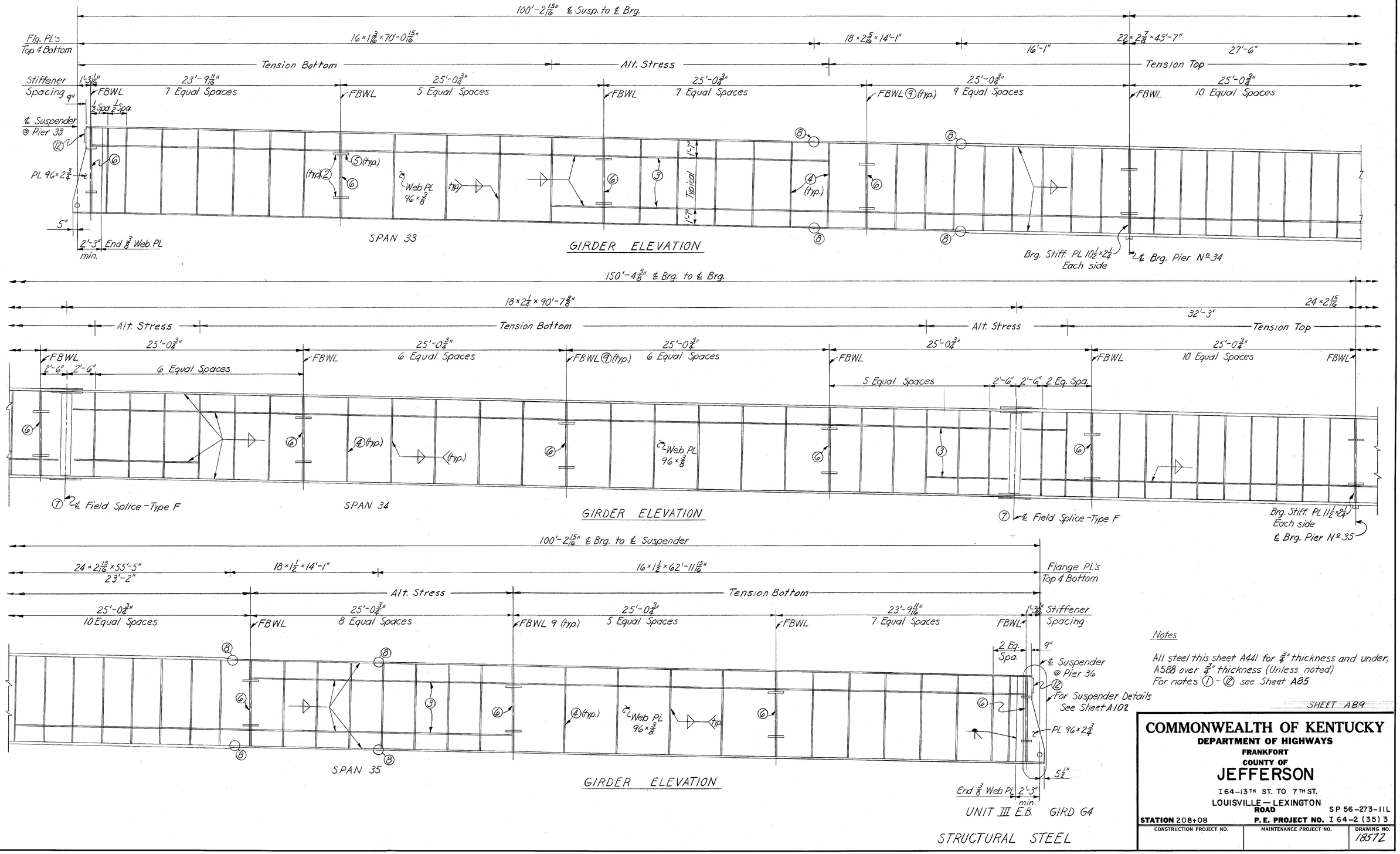

Notes

All steel this sheet A441 for 3/4" thickness and under, A588 over 3/4" thickness (Unless noted)
For notes ① - ⑫ see Sheet A85

SHEET A89

COMMONWEALTH OF KENTUCKY
DEPARTMENT OF HIGHWAYS
FRANKFORT
COUNTY OF
JEFFERSON

I 64-13TH ST. TO 7TH ST.
LOUISVILLE — LEXINGTON ROAD
SP 56-273-11L

STATION 208+08 **P. E. PROJECT NO.** I 64-2 (35) 3

CONSTRUCTION PROJECT NO.	MAINTENANCE PROJECT NO.	DRAWING NO.
		18572

LETTITG DATE

DESIGNED BY JHB DATE 2/71
DETAILED BY JHB DATE
TRACED BY DATE
CHECKED BY DATE
CHECKED BY DATE
REVISED DATE
REVISED DATE

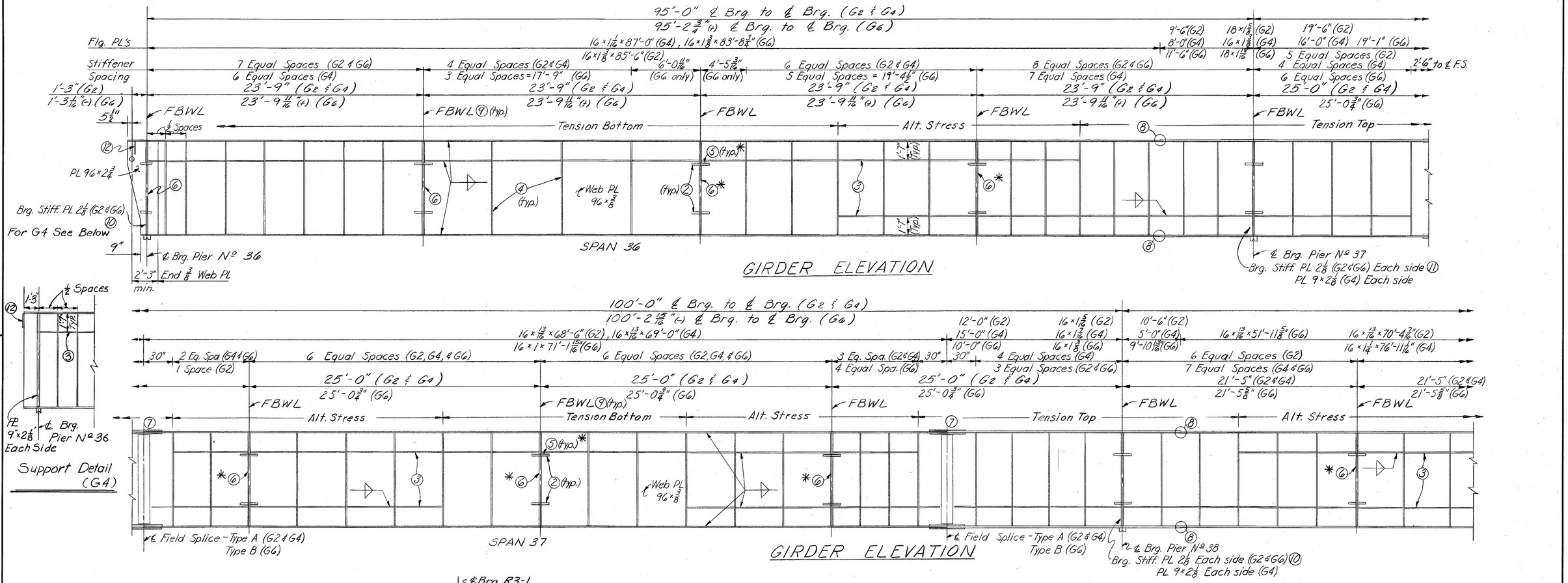

GIRDER ELEVATION

Support Detail (G4)

GIRDER ELEVATION

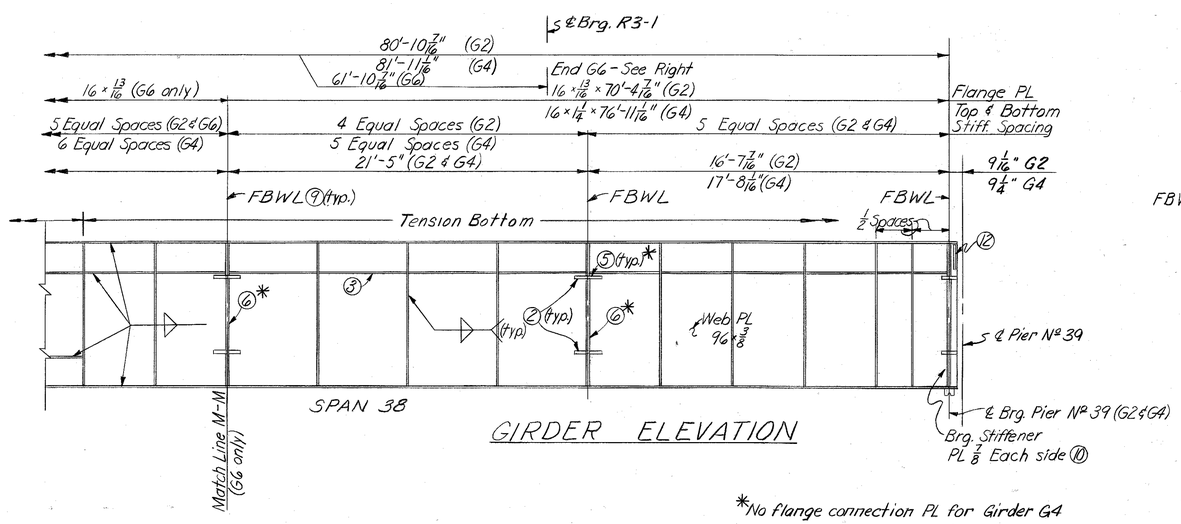

GIRDER ELEVATION

*No flange connection PL for Girder G4

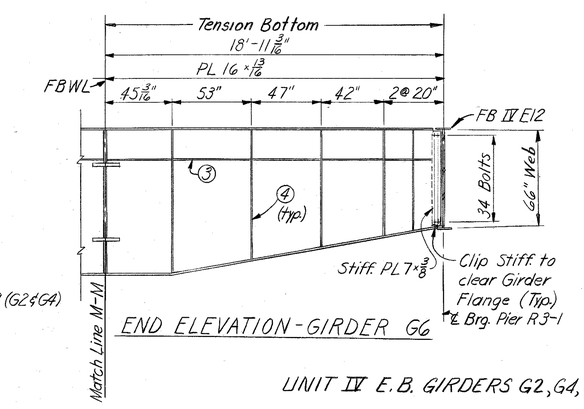

END ELEVATION - GIRDER G6

Notes

All steel this sheet A441 for 3/4" thickness and under, and A588 over 3/4" thickness (Unless noted)
For notes 1 - 12 see Sheet A85

SHEET A90

UNIT IV E.B. GIRDERS G2, G4, G6

STRUCTURAL STEEL

COMMONWEALTH OF KENTUCKY
DEPARTMENT OF HIGHWAYS
FRANKFORT
COUNTY OF
JEFFERSON
I64-13TH ST. TO 7TH ST.
LOUISVILLE — LEXINGTON ROAD
SP 56-273-IIL
STATION 208+08 P.E. PROJECT NO. I 64-2 (35) 3

CONSTRUCTION PROJECT NO.	MAINTENANCE PROJECT NO.	DRAWING NO.
		18572

LETTING DATE

DESIGNED BY GMA & JMB CHECKED BY HBS DATE 2/71
DETAILED BY CHECKED BY DATE
TRACED BY CHECKED BY DATE
REVISED DATE REVISED DATE

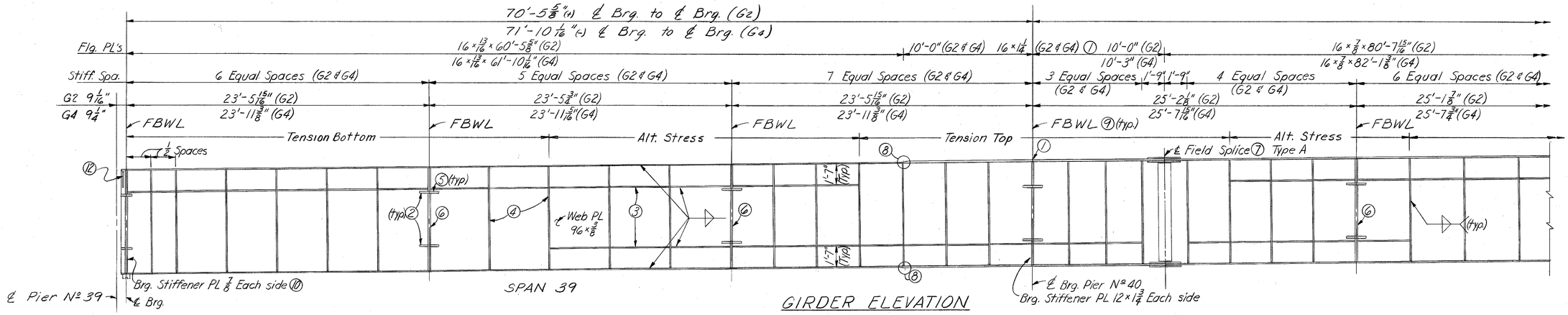

GIRDER ELEVATION

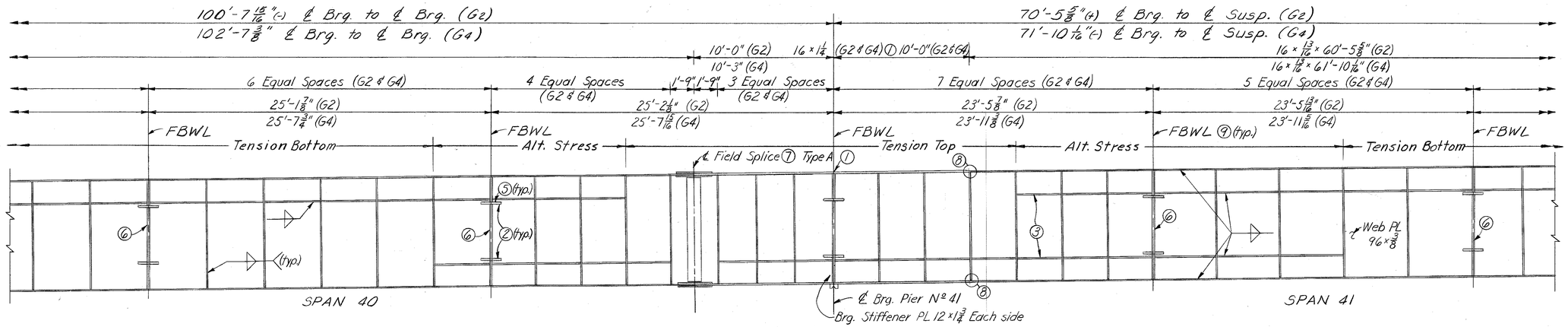

GIRDER ELEVATION

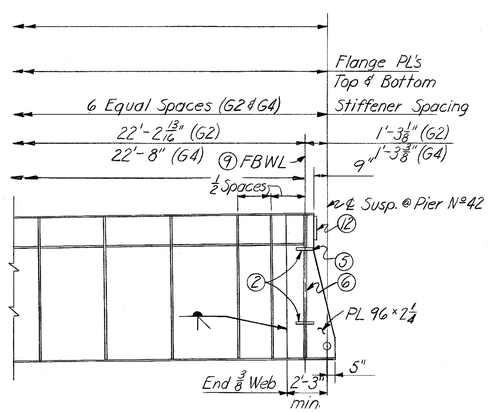

GIRDER ELEVATION

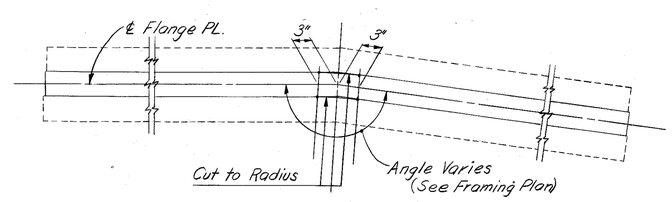

ANGLED FLANGE PLATE DETAIL

Notes

All steel this sheet A441 for 3/4" thickness and under
A588 over 3/4" thickness (Unless noted)
For notes ① - ⑫ see Sheet A85

SHEET A91

UNIT V E.B. GIRDERS G2 & G4

STRUCTURAL STEEL

COMMONWEALTH OF KENTUCKY
DEPARTMENT OF HIGHWAYS
FRANKFORT
COUNTY OF
JEFFERSON

I 64-13TH ST. TO 7TH ST.
LOUISVILLE — LEXINGTON ROAD

STATION 208+08	P.E. PROJECT NO. I 64-2(35)3	SP 56-273-11L
CONSTRUCTION PROJECT NO.	MAINTENANCE PROJECT NO.	DRAWING NO. 18572

LETTING DATE

DESIGNED BY G.M.A. & JMB DATE
DETAILED BY CHECKED BY ABS DATE 8/71
TRACED BY CHECKED BY DATE
REVISED
REVISED
REVISED

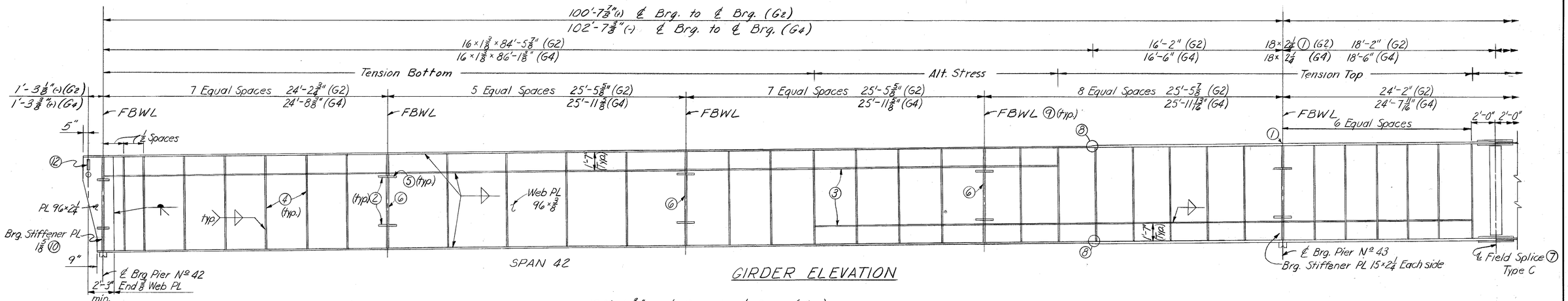

GIRDER ELEVATION

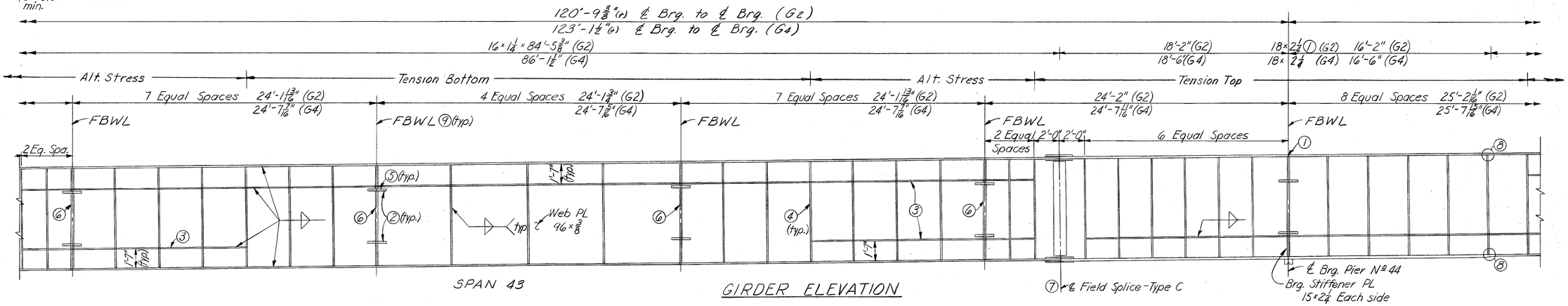

GIRDER ELEVATION

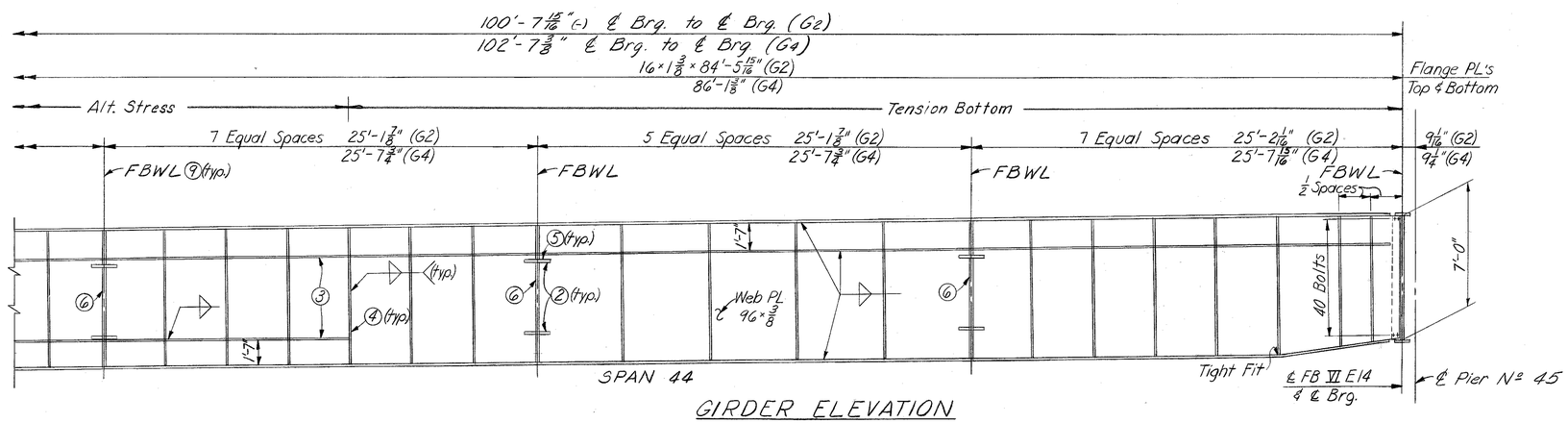

GIRDER ELEVATION

Notes

All steel this sheet A441 for 3/4" thickness and under and A588 over 3/4" thickness (Unless noted)
For notes ①-⑫ see Sheet A85

SHEET A92

UNIT VI E.B. GIRD. G2 & G4

STRUCTURAL STEEL

COMMONWEALTH OF KENTUCKY
DEPARTMENT OF HIGHWAYS
FRANKFORT
COUNTY OF
JEFFERSON

I 64-13TH ST. TO 7TH ST.
LOUISVILLE — LEXINGTON ROAD

STATION 208+08 | SP 56-273-11L | P. E. PROJECT NO. I 64-2(35)3

CONSTRUCTION PROJECT NO.	MAINTENANCE PROJECT NO.	DRAWING NO.
		18572

LETTING DATE

DESIGNED BY CWA & JMB CHECKED BY RAS DATE 2/71
DETAILED BY CHECKED BY DATE
TRACED BY CHECKED BY DATE
REVISED. DATE
REVISED. DATE
REVISED. DATE

NOTE: Contractor shall verify existing suspender dimensions before fabricating this end of girders.

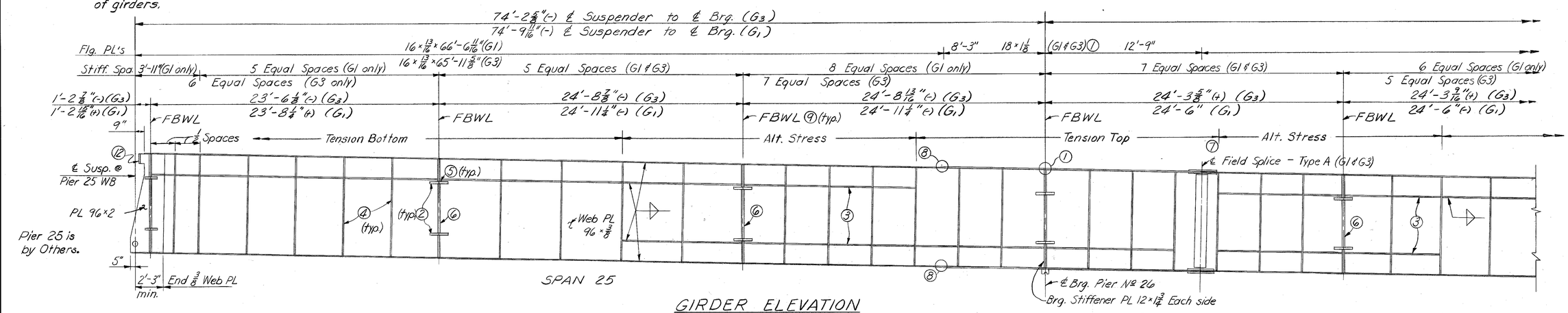

GIRDER ELEVATION

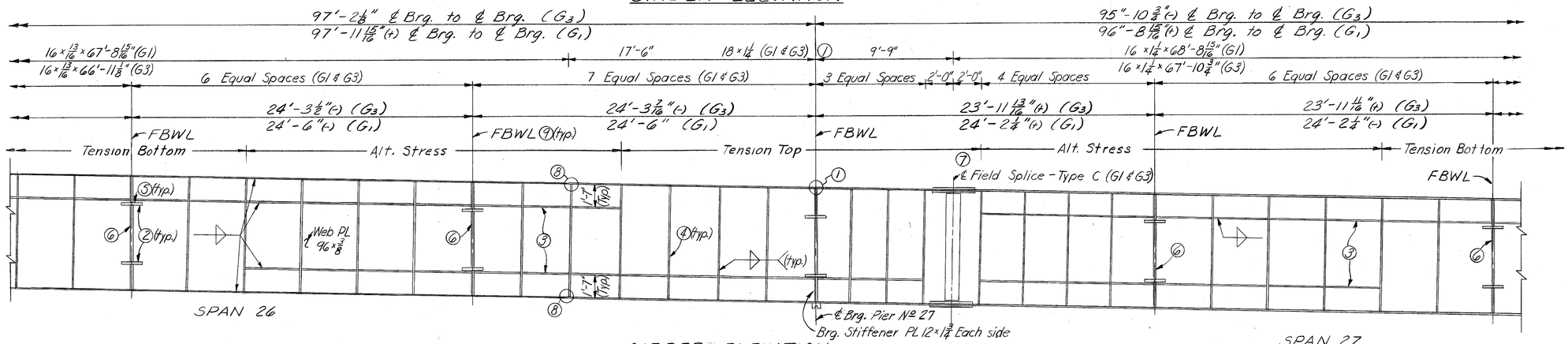

GIRDER ELEVATION

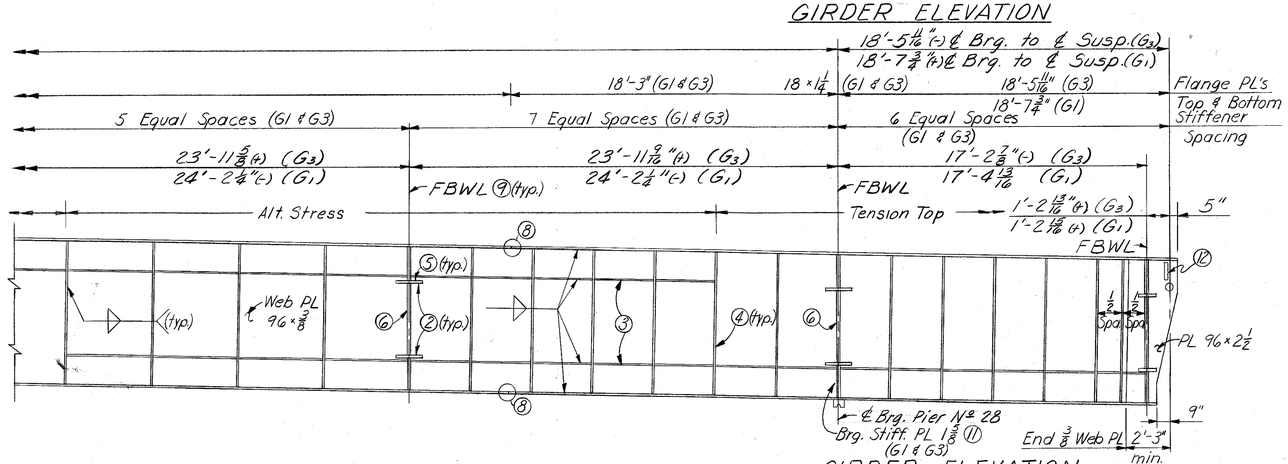

GIRDER ELEVATION

Notes

All steel this sheet A441 for 3/4" thickness and under, and A588 over 3/4" thickness (Unless noted)
For notes ① - ⑫ see Sheet A85

UNIT I W.B. GIRDER G1 & G3

STRUCTURAL STEEL

SHEET A93

COMMONWEALTH OF KENTUCKY
DEPARTMENT OF HIGHWAYS
FRANKFORT
COUNTY OF
JEFFERSON

I64-13TH ST. TO 7TH ST.
LOUISVILLE— LEXINGTON ROAD

STATION 208+08 | P.E. PROJECT NO. I 64-2(35)3 | SP 56-273-11L

CONSTRUCTION PROJECT NO. | MAINTENANCE PROJECT NO. | DRAWING NO. 18572

LETTING DATE

DESIGNED BY GMA & JMB CHECKED BY RBS DATE 2/71 REVISED
DETAILED BY CHECKED BY DATE REVISED
TRACED BY CHECKED BY DATE REVISED

FED. ROAD DIST.	STATE	FED. AID PROJ. NO.	FISCAL YEAR	SHEET NO.	TOTAL SHEETS
7	KY.				

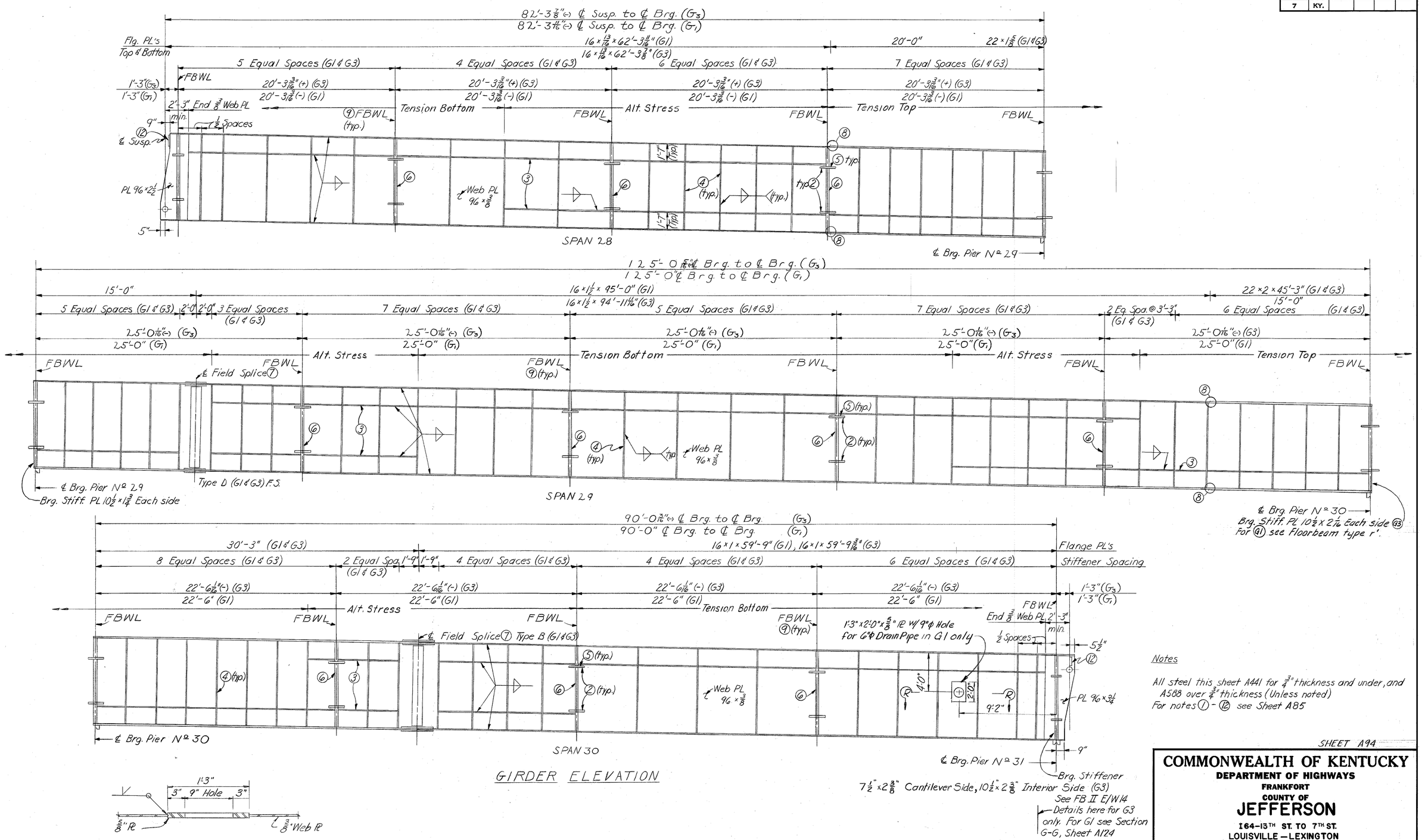

GIRDER ELEVATION

SECTION R-R

Notes

All steel this sheet A441 for 3/4" thickness and under, and A588 over 3/4" thickness (Unless noted)
For notes 1 - 12 see Sheet A85

SHEET A94

UNIT II W.B. GIRD. G1 & G3
STRUCTURAL STEEL

COMMONWEALTH OF KENTUCKY
DEPARTMENT OF HIGHWAYS
FRANKFORT
COUNTY OF
JEFFERSON
I64-13TH ST. TO 7TH ST.
LOUISVILLE — LEXINGTON ROAD
SP 56-273-11L
STATION 208+08 PROJECT NO. I64-2(35)3

BRIDGE NUMBER	DRAWING NO.	INDEX
	18572	

DESIGNED BY JFK	CHECKED BY JMB	DATE 2/71	REVISED DATE
DETAILED BY RBS	CHECKED BY	DATE	REVISED DATE
TRACED BY	CHECKED BY	DATE	REVISED DATE

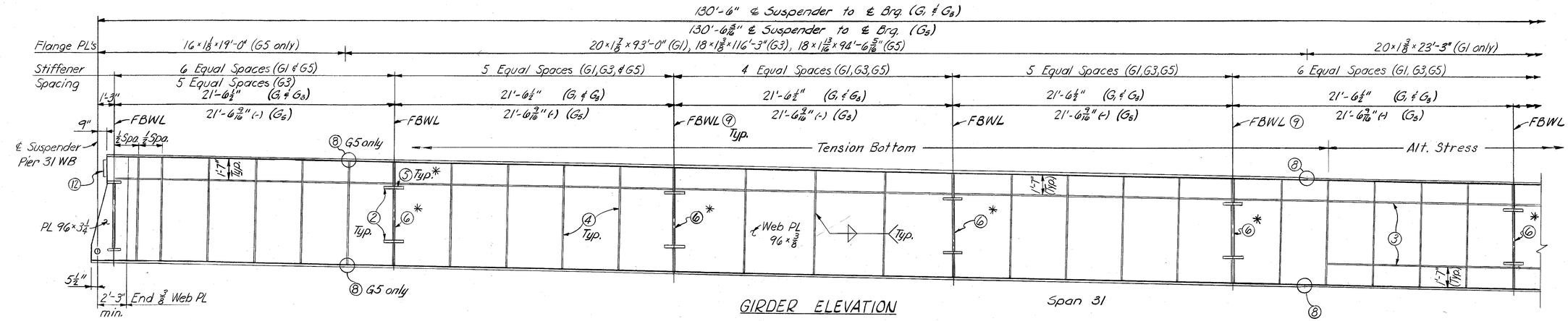

GIRDER ELEVATION

Detail G5 as shown here, for G3 see Sec. M-M Sheet A108, for G1 see Sec. G-G Sheet A124

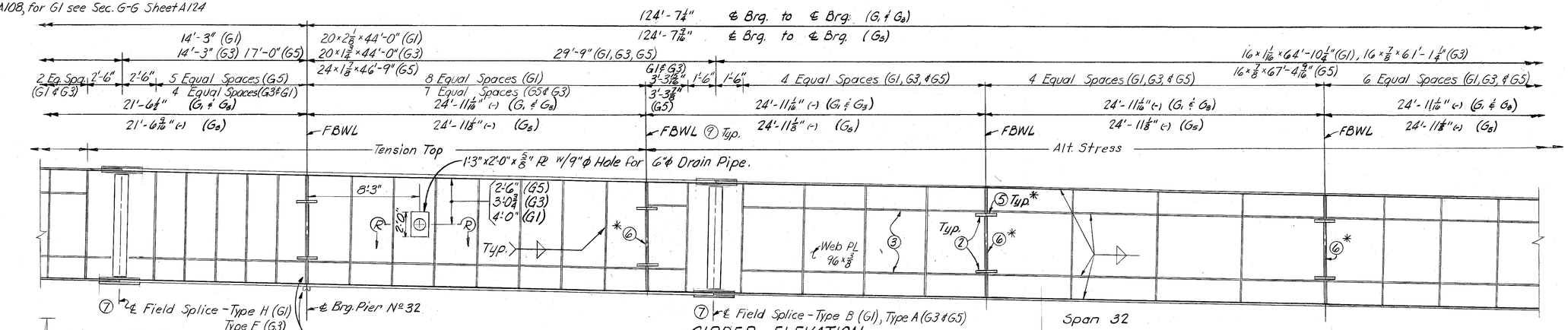

GIRDER ELEVATION

Change of Flg. Size as shown on details.

2' Rad. Typ.

Note: Brg. shoe is under G1 only. See FB III W7, type n' for connection details at G3 & G5. For G1 use Brg. Stiff. PL's 9 1/2×2 1/4 on cantelever side & 11 1/2×2 1/4 interior side.

* No flange connection PL for Girder G3

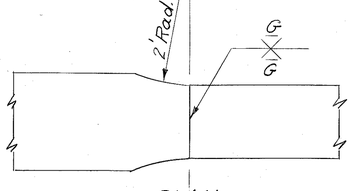

PLAN

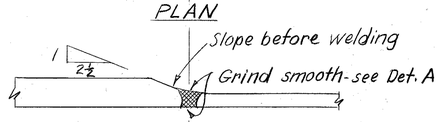

ELEVATION

SHOP FLANGE SPLICE DETAIL

Refer also to Std. Dwg. "Modifications & Additions to AWS D2.0-69 Specifications" AWS 3, Current edition.

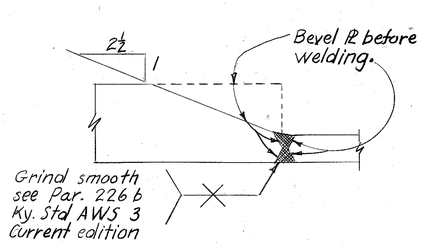

DETAIL A

Also typ. for flanges that change in thickness only.

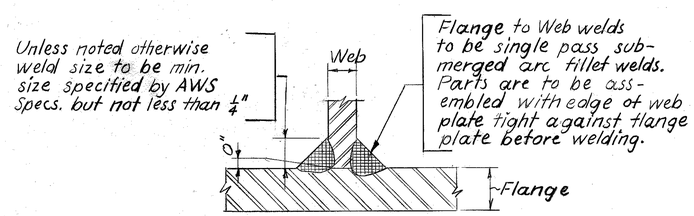

FLANGE TO WEB WELD

Notes
For Section R-R see Sheet A94.
All steel this sheet A441 for 3/4" thickness and under, and A588 over 3/4" thickness (Unless noted)
For notes ①-⑫ see Sheet A85

SHEET A95

UNIT III W.B. GIRDERS G1, G3, & G5
STRUCTURAL STEEL

COMMONWEALTH OF KENTUCKY
DEPARTMENT OF HIGHWAYS
FRANKFORT
COUNTY OF
JEFFERSON
I64-13TH ST. TO 7TH ST.
LOUISVILLE — LEXINGTON ROAD
SP 56-273-11L
STATION 208+08
P.E. PROJECT NO. I 64-2 (35) 3
CONSTRUCTION PROJECT NO.
MAINTENANCE PROJECT NO.
DRAWING NO. 18572

LETTING DATE

DESIGNED BY 1235 DATE
DETAILED BY AWR & JMB CHECKED BY BMD DATE 2-8-71 REVISED
TRACED BY CHECKED BY BMD DATE REVISED
DATE REVISED

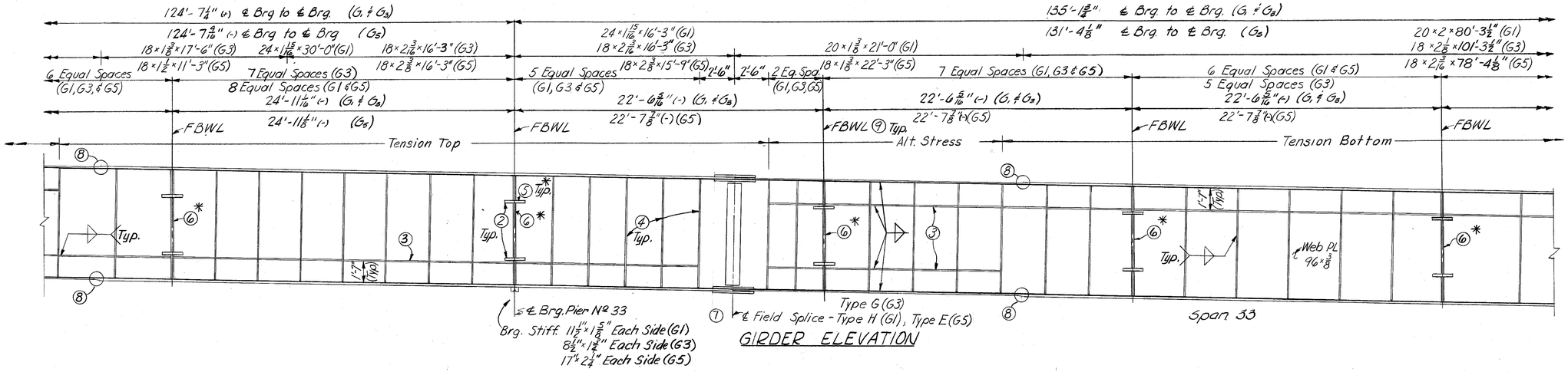

GIRDER ELEVATION

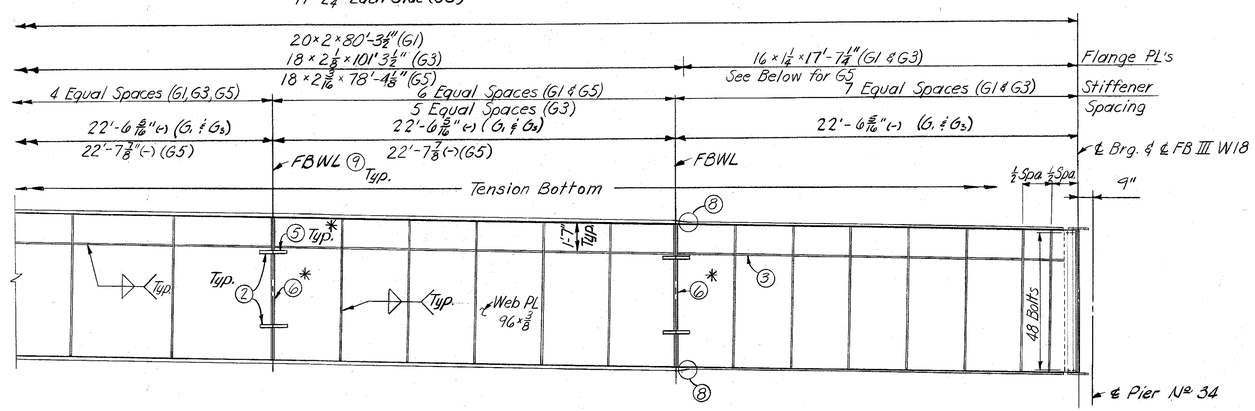

GIRDER ELEVATION

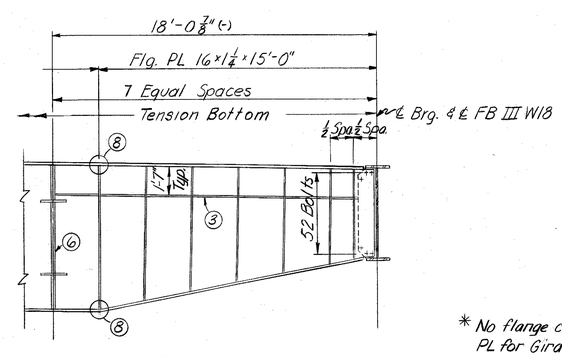

END ELEVATION - GIRDER G5

* No flange connection PL for Girder G3

Notes

All steel this sheet A441 for 3/4" thickness and under, and A588 over 3/4" thickness (Unless noted)
For notes (1)-(12) see Sheet A85

SHEET A96

UNIT III WB GIRDERS G1, G3, & G5

STRUCTURAL STEEL

COMMONWEALTH OF KENTUCKY
DEPARTMENT OF HIGHWAYS
FRANKFORT
COUNTY OF
JEFFERSON

I64-13TH ST. TO 7TH ST.
LOUISVILLE — LEXINGTON ROAD

STATION 208+08 **P. E. PROJECT NO.** I 64-2(35) 3 SP 56-273-11L

CONSTRUCTION PROJECT NO.	MAINTENANCE PROJECT NO.	DRAWING NO.
		18572

LETTING DATE

DESIGNED BY TCS CHECKED BY BMD DATE
DETAILED BY AJR & JMB CHECKED BY BMD DATE 2-8-71 REVISED
TRACED BY CHECKED BY DATE REVISED
DATE REVISED

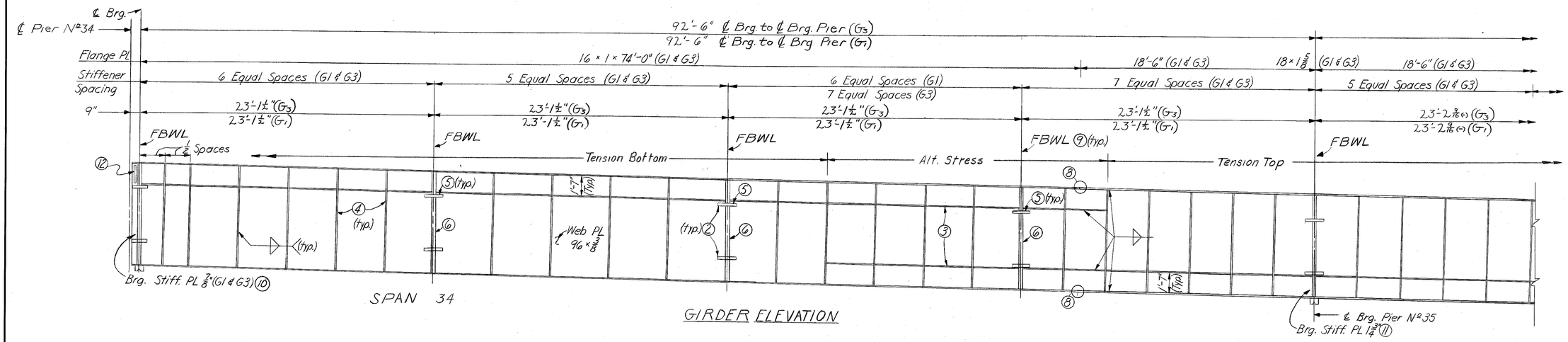

SPAN 34

GIRDER ELEVATION

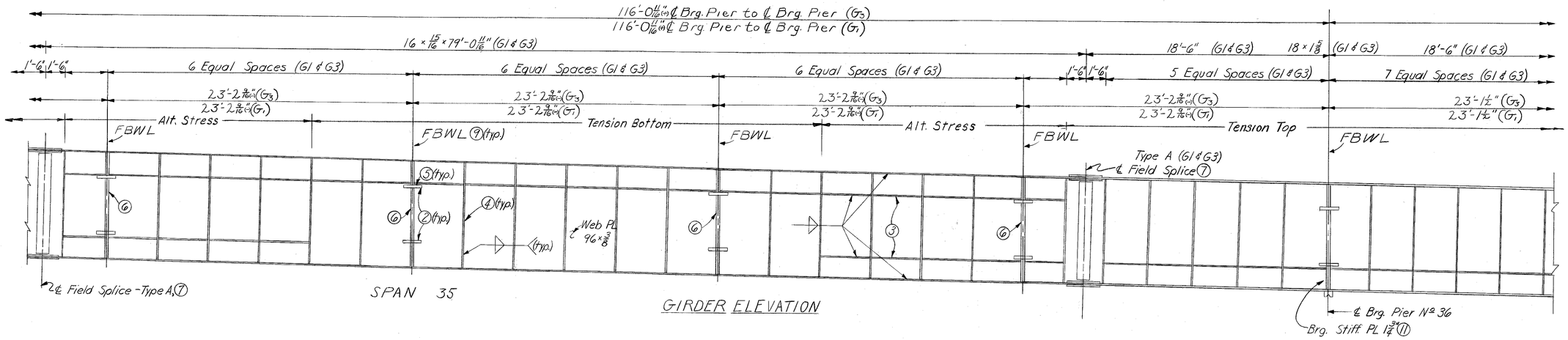

SPAN 35

GIRDER ELEVATION

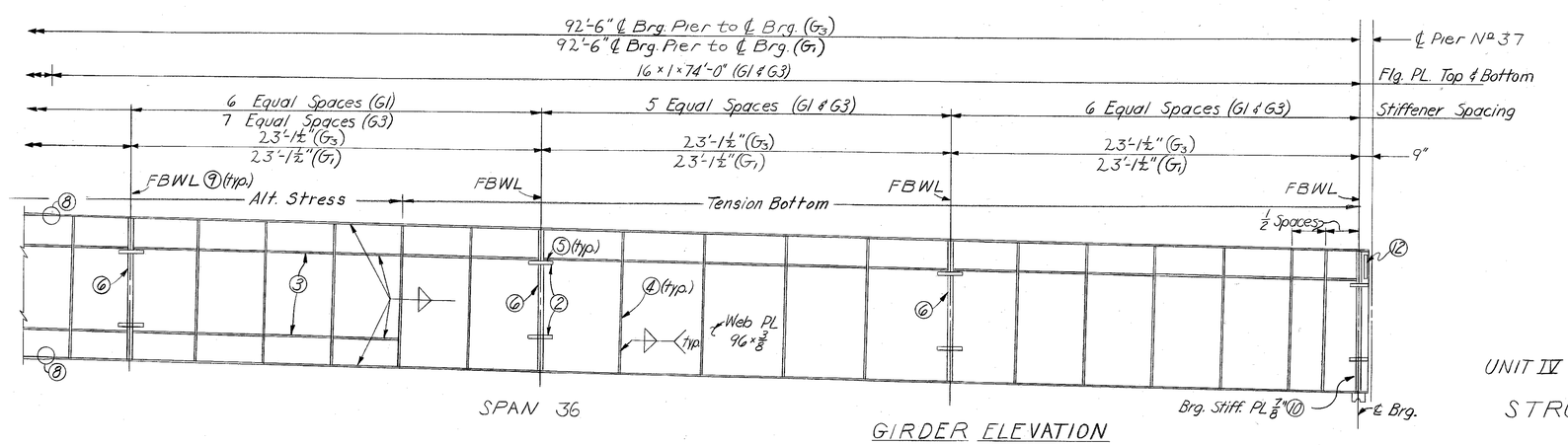

SPAN 36

GIRDER ELEVATION

Notes

All steel this sheet A441 for 3/4" thickness and under and A588 over 3/4" thickness (Unless noted)
For notes (1) - (12) see Sheet A85

UNIT IV WB. GIRDERS G1 & G3

STRUCTURAL STEEL

SHEET A97

COMMONWEALTH OF KENTUCKY
DEPARTMENT OF HIGHWAYS
FRANKFORT
COUNTY OF
JEFFERSON

I64-13TH ST. TO 7TH ST.
LOUISVILLE — LEXINGTON ROAD

STATION 208+08 | P. E. PROJECT NO. I 64-2 (35) 3 | SP 56-273-11L

CONSTRUCTION PROJECT NO. | MAINTENANCE PROJECT NO. | DRAWING NO. 18572

LETTING DATE

DATE REVISED
DATE REVISED
DATE REVISED

DESIGNED BY JFK & JMB CHECKED BY RBS DATE 2/71
DETAILED BY CHECKED BY DATE
TRACED BY CHECKED BY DATE

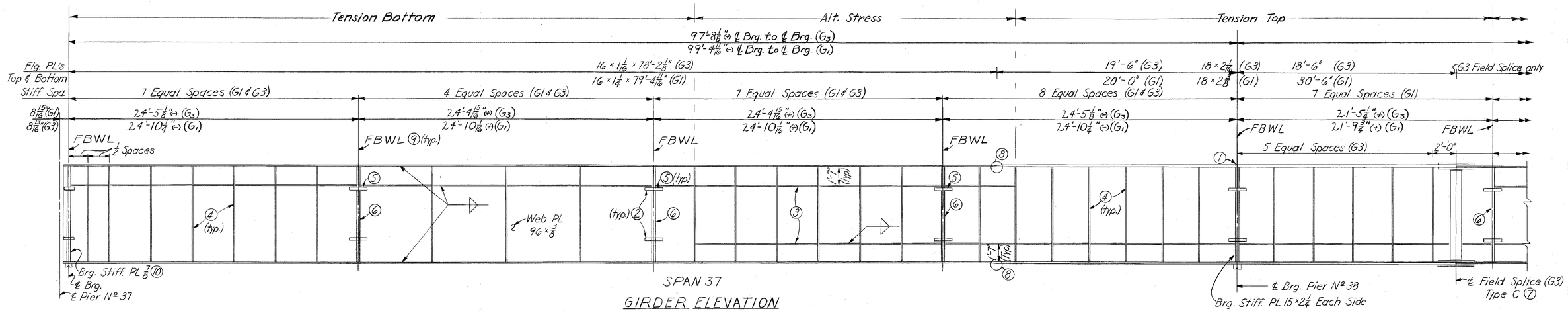

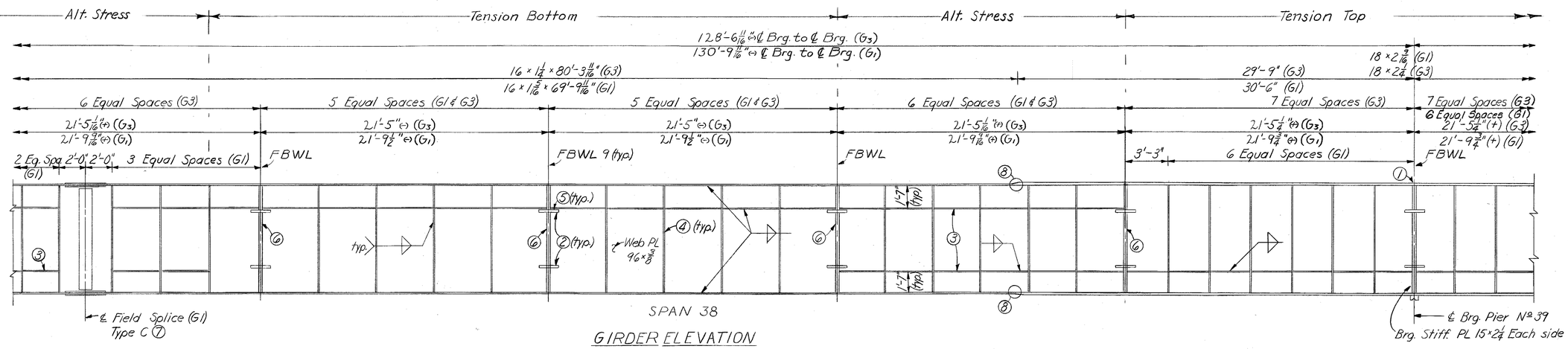

Notes

All steel this sheet A441 for 3/4" thickness and under, and A588 over 3/4" thickness (Unless noted)
For notes 1-12 see Sheet A85

SHEET A98

UNIT V W.B. GIRDERS G1 & G3
STRUCTURAL STEEL

COMMONWEALTH OF KENTUCKY
DEPARTMENT OF HIGHWAYS
FRANKFORT
COUNTY OF
JEFFERSON

I 64-13TH ST. TO 7TH ST.
LOUISVILLE—LEXINGTON ROAD

SP 56-273-11L
STATION 208+08 P. E. PROJECT NO. I 64-2 (35) 3

CONSTRUCTION PROJECT NO.	MAINTENANCE PROJECT NO.	DRAWING NO.
		18572

LETTING DATE

DESIGNED BY JFK & JMB CHECKED BY RBJ DATE 2/71 REVISED
DETAILED BY CHECKED BY DATE REVISED
TRACED BY CHECKED BY DATE REVISED

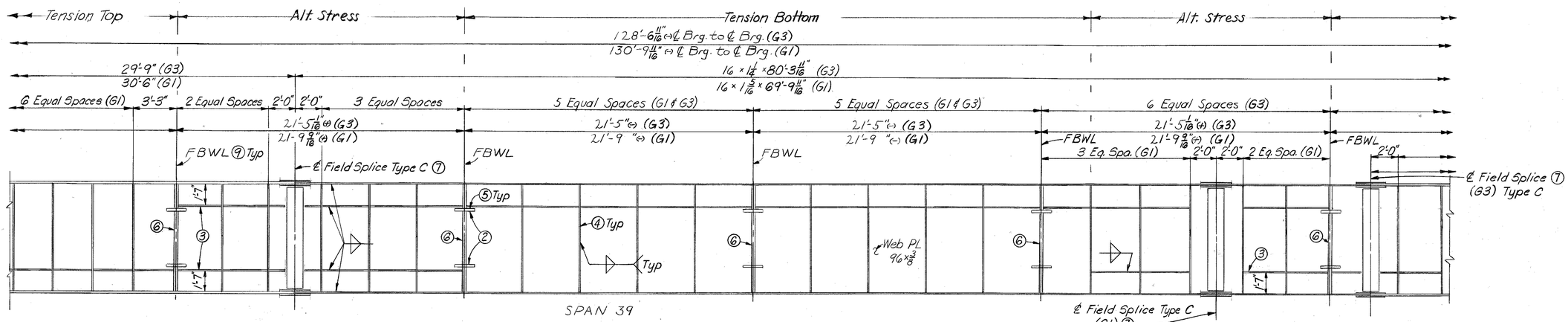

GIRDER ELEVATION

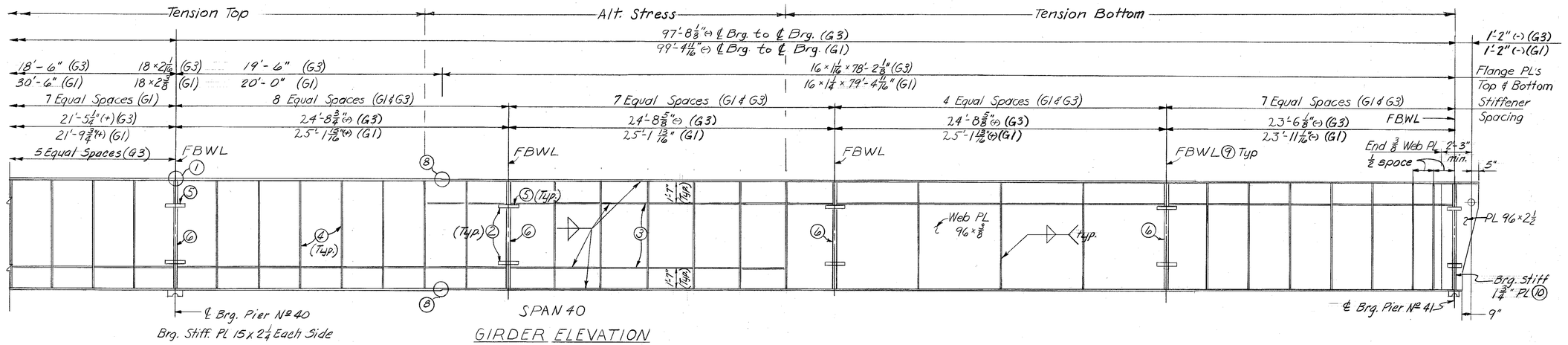

GIRDER ELEVATION

Notes

All steel this sheet A441 for 3/4" thickness and under, and A588 over 3/4" thickness (Unless noted)
For notes ①-⑫ see Sheet A85

UNIT V W.B. GIRDERS G1 & G3
STRUCTURAL STEEL

SHEET A99

COMMONWEALTH OF KENTUCKY
DEPARTMENT OF HIGHWAYS
FRANKFORT
COUNTY OF
JEFFERSON

I64-13TH ST. TO 7TH ST.
LOUISVILLE—LEXINGTON ROAD
SP 56-273-11L

STATION 208+08 **P. E. PROJECT NO.** I 64-2 (35) 3

CONSTRUCTION PROJECT NO.	MAINTENANCE PROJECT NO.	DRAWING NO.
		18572

LETTING DATE

DESIGNED BY JFK & JNB CHECKED BY RBS DATE 2/71 REVISED
DETAILED BY CHECKED BY DATE REVISED
TRACED BY CHECKED BY DATE REVISED

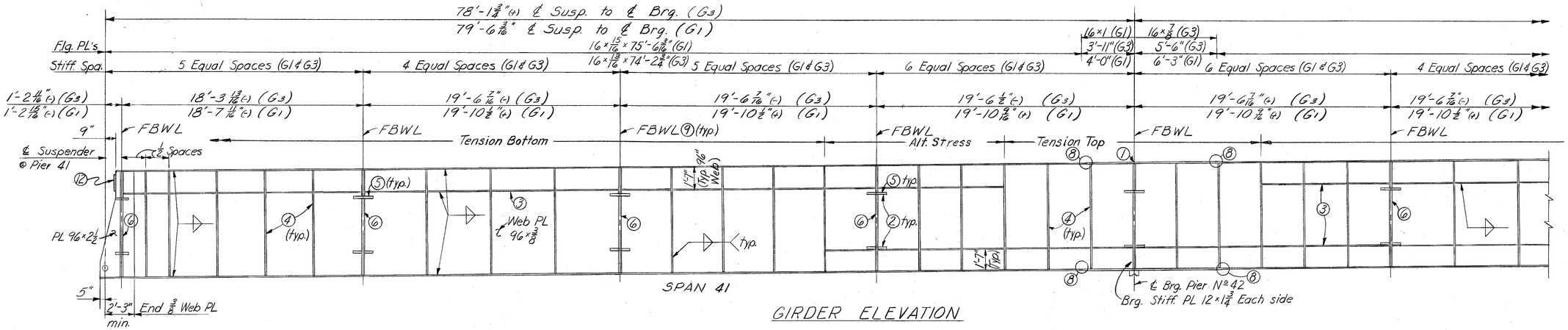

GIRDER ELEVATION

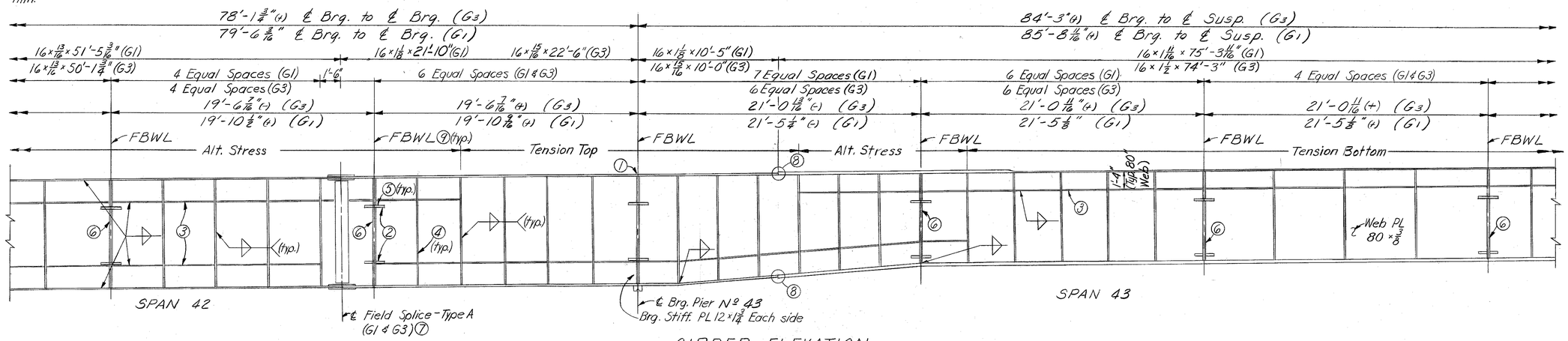

GIRDER ELEVATION

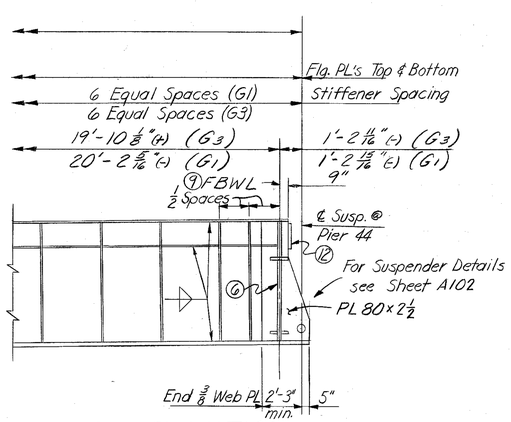

GIRDER ELEVATION

Notes

All steel this sheet A441 for 3/4" thickness and under, and A588 over 3/4" thickness (Unless noted)
For notes ①-⑫ see Sheet A85

SHEET A100

UNIT VI W.B. GIRD. G1 & G3
STRUCTRAL STEEL

COMMONWEALTH OF KENTUCKY
DEPARTMENT OF HIGHWAYS
FRANKFORT
COUNTY OF
JEFFERSON

I 64-13TH ST. TO 7TH ST.
LOUISVILLE — LEXINGTON ROAD
SP 56-273-11L
STATION 208+08
P. E. PROJECT NO. I 64-2 (35) 3

CONSTRUCTION PROJECT NO.	MAINTENANCE PROJECT NO.	DRAWING NO.
		18572

LETTING DATE

DESIGNED BY GMH & JMB CHECKED BY
DETAILED BY CHECKED BY
TRACED BY CHECKED BY
DATE 12-3-71 REVISED
DATE REVISED
DATE REVISED

FED. ROAD DIST.	STATE	FED. AID PRO. NO.	FISCAL YEAR	SHEET NO.	TOTAL SHEETS
7	KY.				

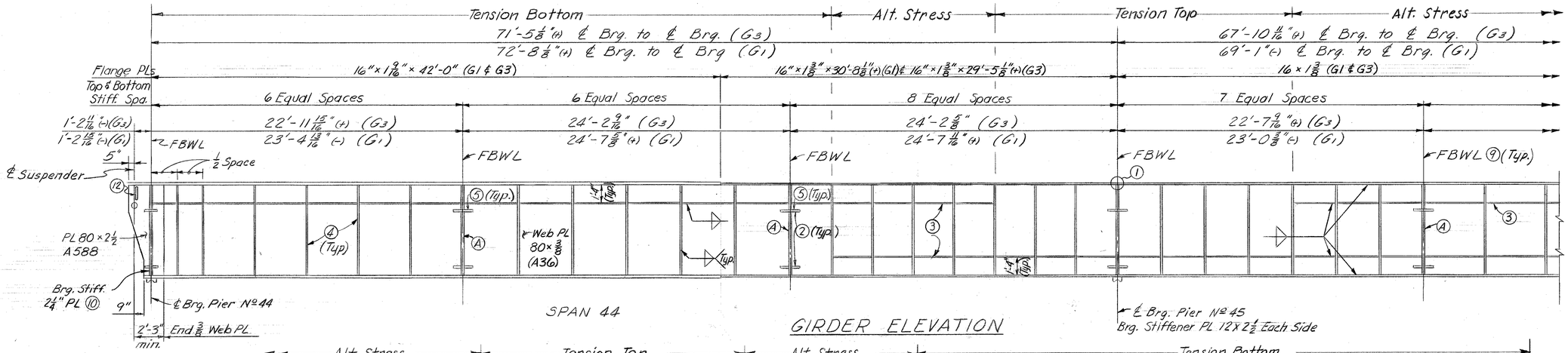

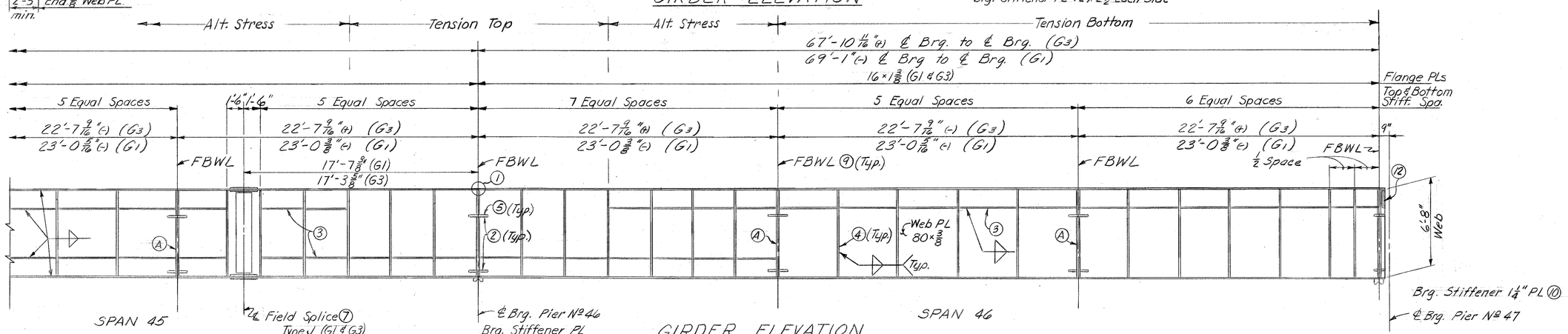

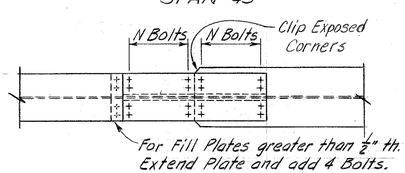

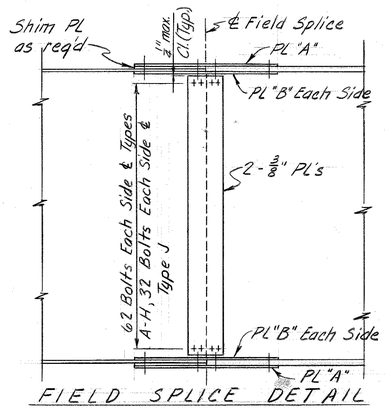

FIELD SPLICE DETAIL

Field Splice	PL A	PL B	N
Type A	16 × 1/2	7 × 9/16	16
Type B	16 × 5/8	7 × 11/16	20
Type C	16 × 3/4	7 × 13/16	24
Type D	16 × 3/4	7 × 7/8	26
Type E	18 × 3/4	8 × 13/16	28
Type F	18 × 7/8	8 × 1	32
Type G	18 × 15/16	8 × 1	36
Type H	20 × 11/16	9 × 3/4	32
Type J	16 × 9/16	7 × 5/8	12

Notes:
All steel this sheet A36 (Unless noted).
For notes ①-⑫ see Sheet A85.
Ⓐ Stiffener and Floorbeam flange connection plate to be A36 Steel.

UNIT VII W.B. GIRDERS G1 & G3
STRUCTURAL STEEL

SHEET A101

COMMONWEALTH OF KENTUCKY
DEPARTMENT OF HIGHWAYS
FRANKFORT
COUNTY OF
JEFFERSON
I64-13TH ST. TO 7TH ST.
LOUISVILLE – LEXINGTON
ROAD SP 56-273-11L
STATION 208+08 **PROJECT NO.** I 64-2(35)3

BRIDGE NUMBER | DRAWING NO. 18572 | INDEX

DESIGNED BY GMA & JMB CHECKED BY TBS DATE 4/71
DETAILED BY CHECKED BY DATE
TRACED BY CHECKED BY DATE
REVISED DATE
REVISED DATE
REVISED DATE

FED. ROAD DIST.	STATE	FED. AID PRO. NO.	FISCAL YEAR	SHEET NO.	TOTAL SHEETS
7	KY.				

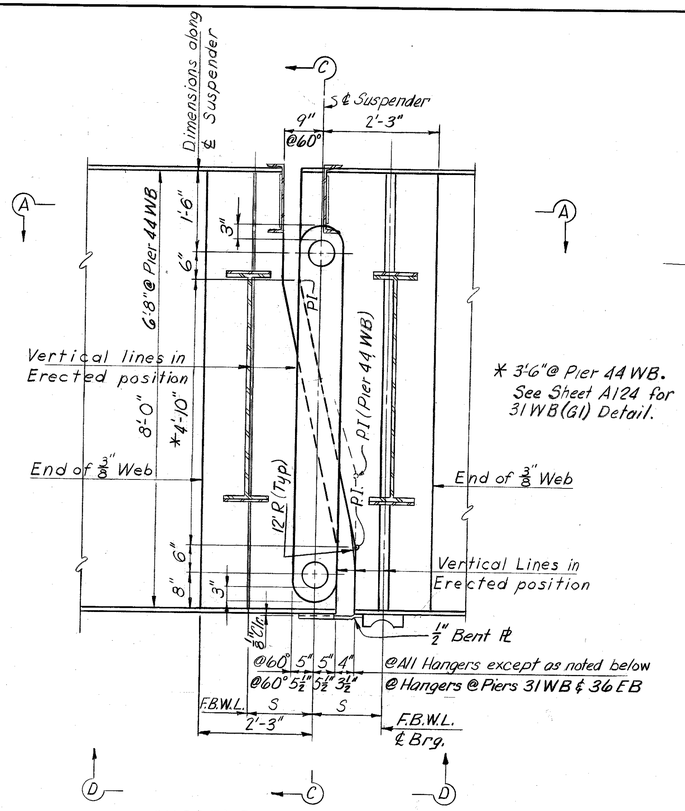

SUSPENDER DETAIL

See Framing Plan for Dimension "S"

* 3'-6" @ Pier 44 WB. See Sheet A124 for 31 WB (G1) Detail.

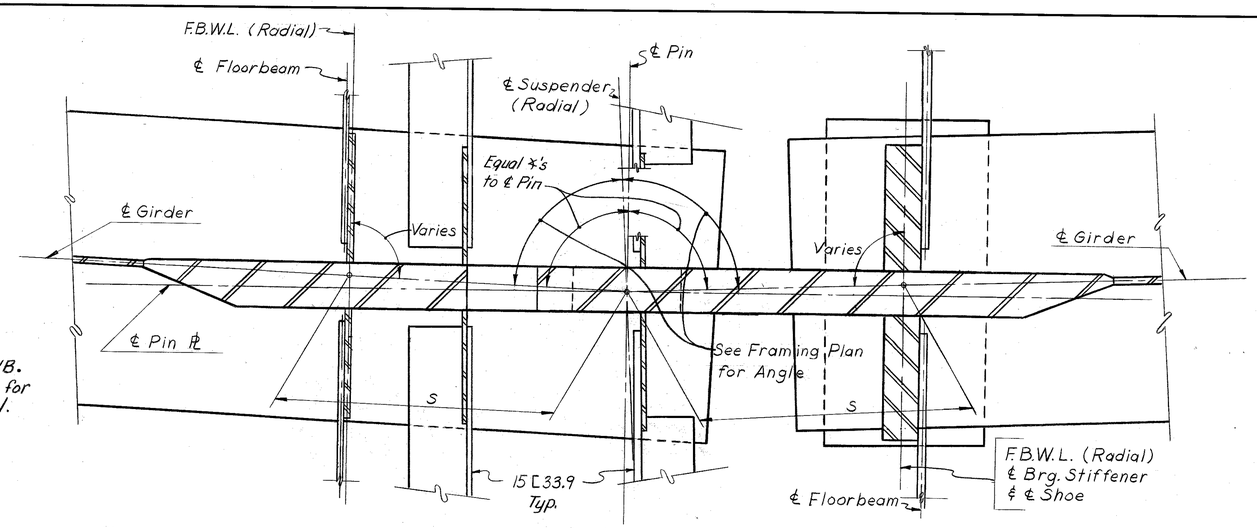

SECTION A-A

Suspender Plates Not Shown
Floor Beam Flanges Not Shown

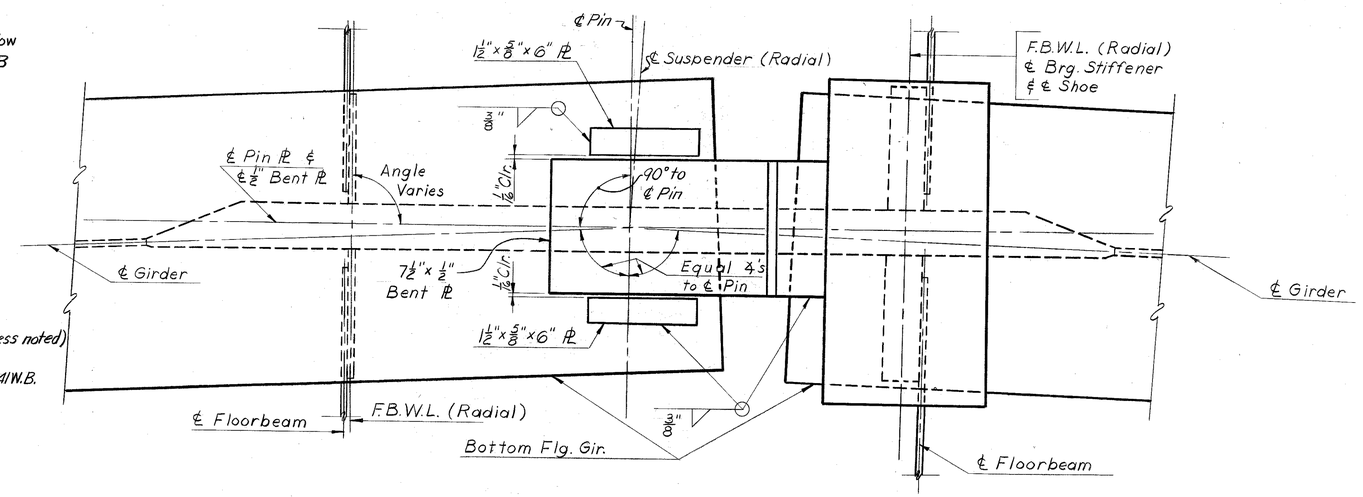

VIEW D-D

Suspender Plates Not Shown
Floor Beam Flanges Not Shown

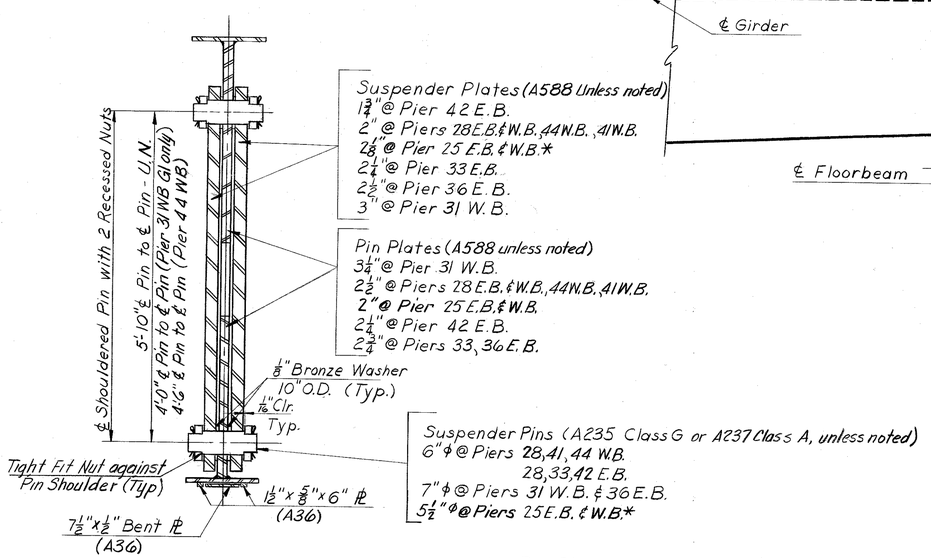

Suspender Plates (A588 Unless noted)
1 3/4" @ Pier 42 E.B.
2" @ Piers 28 E.B. & W.B., 44 W.B., 41 W.B.
2 1/8" @ Pier 25 E.B. & W.B.*
2 1/4" @ Pier 33 E.B.
2 5/8" @ Pier 36 E.B.
3" @ Pier 31 W.B.

Pin Plates (A588 unless noted)
3 1/4" @ Pier 31 W.B.
2 1/2" @ Piers 28 E.B. & W.B., 44 W.B., 41 W.B.
2" @ Pier 25 E.B. & W.B.
2 1/4" @ Pier 42 E.B.
2 3/4" @ Piers 33, 36 E.B.

Suspender Pins (A235 Class G or A237 Class A, unless noted)
6" ϕ @ Piers 28, 41, 44 W.B.
28, 33, 42 E.B.
7" ϕ @ Piers 31 W.B. & 36 E.B.
5 1/2" ϕ @ Piers 25 E.B. & W.B.*

SECTION C-C

* - By Others

SHEET A102

COMMONWEALTH OF KENTUCKY
DEPARTMENT OF HIGHWAYS
FRANKFORT
COUNTY OF
JEFFERSON
I64-13TH ST. TO 7TH ST.
LOUISVILLE – LEXINGTON ROAD

STATION 208+08 | PROJECT NO. I64-2(35)3 | SP 56-273-11L

BRIDGE NUMBER	DRAWING NO.	INDEX
	18572	

GIRDER DETAILS
STRUCTURAL STEEL

DESIGNED BY W.F.B. | CHECKED BY | DATE | REVISED
DETAILED BY W.F.B. | CHECKED BY Block | DATE 2-71 | REVISED
TRACED BY | CHECKED BY | DATE | REVISED

WESTBOUND ROADWAY

UNIT	GIRDER	FLOORBEAM No.	℄ SUSP.	1	2	3	4	5	6	7	8	9	10	11	12	13	14	15	16	17	18	19	20	21	℄ SUSP.
I	G1	Elev. Top of Web	487.785	487.775	487.561	487.292	487.005	486.761	486.522	486.251	485.984	485.747	485.512	485.245	485.969	484.796									484.780
		Δ Total	.000	.003	.040	.031	.000	.017	.035	.018	.000	.023	.043	.028	.000	.003									.000
		Δ Steel	.000	.000	.006	.005	.000	.003	.005	.003	.000	.004	.007	.004	.000	.000									.000
	G3	Elev. Top of Web	487.032	487.020	486.783	486.499	486.215	485.968	485.718	485.431	485.144	484.893	484.644	484.366	484.081	483.897									483.883
		Δ Total	.000	.002	.027	.016	.000	.027	.046	.025	.000	.020	.039	.025	.000	.001									.000
		Δ Steel	.000	.000	.004	.002	.000	.004	.007	.004	.000	.003	.006	.004	.000	.000									.000
II	G1	Elev. Top of Web	484.780	484.773	484.598	484.396	484.181	483.973	483.756	483.531	483.246	482.902	482.558	482.294	482.042	481.761	481.439								481.423
		Δ Total	.000	.005	.025	.018	-.002	.000	.053	.104	.102	.048	.000	.007	.033	.034	.000								.000
		Δ Steel	.000	.001	.005	.003	.000	.000	.010	.019	.018	.009	.000	.001	.006	.006	.000								.000
	G3	Elev. Top of Web	483.883	483.877	483.798	483.692	483.574	483.387	483.165	482.936	482.642	482.287	481.934	481.662	481.407	481.118	480.787								480.770
		Δ Total	.000	.000	.024	.019	-.001	.000	.055	.110	.107	.049	.000	.007	.036	.037	.000								.000
		Δ Steel	.000	.000	.004	.003	.000	.000	.010	.019	.019	.009	.000	.001	.006	.006	.000								.000
III	G1	Elev. Top of Web	481.423	481.414	481.250	481.030	480.750	480.410	480.030	479.647	479.259	478.902	478.537	478.168	477.835	477.586	477.348	477.066	476.727	476.325	475.864				
		Δ Total	.000	.007	.124	.190	.201	.157	.077	.000	-.029	-.023	-.024	-.030	.000	.079	.170	.216	.206	.132	.000				
		Δ Steel	.000	.001	.023	.037	.039	.030	.015	.000	-.006	-.004	-.005	-.006	.000	.015	.033	.041	.040	.025	.000				
	G3	Elev. Top of Web	480.987	480.974	480.790	480.560	480.281	479.944	479.580	479.211	478.825	478.460	478.089	477.724	477.398	477.154	476.925	476.642	476.298	475.889	475.429				
		Δ Total	.000	.004	.101	.157	.168	.127	.063	.000	-.027	-.029	-.036	-.038	.000	.083	.182	.228	.212	.132	.000				
		Δ Steel	.000	.001	.021	.032	.034	.026	.013	.000	-.006	-.006	-.007	-.008	.000	.017	.037	.047	.044	.027	.000				
	G5	Elev. Top of Web	480.770	480.761	480.595	480.373	480.092	479.735	479.343	478.954	478.554	478.184	477.811	477.437	477.102	476.651	476.158	475.629	475.104	474.615	474.224				
		Δ Total	.000	.007	.129	.200	.216	.162	.077	.000	-.033	-.032	-.034	-.037	.000	.089	.184	.232	.218	.130	.000				
		Δ Steel	.000	.001	.023	.035	.038	.028	.013	.000	-.006	-.006	-.006	-.006	.000	.016	.032	.041	.038	.023	.000				
IV	G1	Elev. Top of Web		475.842	475.547	475.216	474.852	474.486	474.154	473.830	473.474	473.086	472.714	472.419	472.162	471.904	471.642								471.636
		Δ Total		.000	.042	.048	.021	.000	.024	.056	.056	.024	.000	.021	.048	.042	.000								.000
		Δ Steel		.000	.007	.008	.004	.000	.004	.010	.010	.004	.000	.004	.008	.007	.000								.000
	G3	Elev. Top of Web		475.406	475.122	474.792	474.419	474.012	473.592	473.183	472.736	472.253	471.789	471.408	471.069	470.721	470.358								470.348
		Δ Total		.000	.053	.060	.025	.000	.026	.063	.063	.026	.000	.025	.060	.053	.000								.000
		Δ Steel		.000	.008	.009	.004	.000	.004	.010	.010	.004	.000	.004	.009	.008	.000								.000
V	G1	Elev. Top of Web	471.636	471.630	471.484	471.338	471.202	471.133	471.099	471.128	471.170	471.212	471.267	471.391	471.526	471.730	471.945	472.138	472.314	472.524	472.762	473.029	473.270	473.459	473.473
		Δ Total	.000	.000	.061	.066	.027	.000	.029	.078	.098	.076	.024	.000	.024	.076	.098	.078	.029	.000	.027	.066	.061	.000	.000
		Δ Steel	.000	.000	.010	.011	.004	.000	.005	.012	.016	.012	.004	.000	.004	.012	.016	.012	.005	.000	.004	.011	.010	.000	.000
	G3	Elev. Top of Web	470.348	470.342	470.194	470.049	469.913	469.845	469.807	469.827	469.868	469.912	469.978	470.104	470.237	470.430	470.643	470.836	471.021	471.237	471.473	471.740	471.980	472.172	472.185
		Δ Total	.000	.000	.058	.064	.025	.000	.023	.063	.082	.062	.022	.000	.022	.062	.082	.063	.023	.000	.025	.064	.058	.000	.000
		Δ Steel	.000	.000	.010	.011	.004	.000	.004	.011	.015	.011	.004	.000	.004	.011	.015	.011	.004	.000	.004	.011	.010	.000	.000
VI	G1	Elev. Top of Web	473.473	473.485	473.689	473.883	474.052	474.222	474.389	474.574	474.762	474.971	475.195	475.421	475.615	475.759									475.771
		Δ Total	.000	.002	.046	.058	.034	.000	-.004	.000	-.005	.000	.041	.072	.057	.000									.000
		Δ Steel	.000	.000	.006	.008	.005	.000	-.001	.000	-.001	.000	.006	.010	.008	.000									.000
	G3	Elev. Top of Web	472.185	472.198	472.399	472.592	472.763	472.934	473.102	473.287	473.476	473.684	473.905	474.128	474.323	474.471									474.483
		Δ Total	.000	.002	.043	.054	.032	.000	-.003	.000	-.004	.000	.038	.066	.052	.000									.000
		Δ Steel	.000	.000	.007	.008	.005	.000	.000	.000	-.001	.000	.006	.010	.008	.000									.000
VII	G1	Elev. Top of Web	475.771	475.780	475.985	476.125	476.211	476.258	476.289	476.300	476.274	476.206	476.079												
		Δ Total	.000	.000	.045	.038	.000	-.002	-.001	.000	.028	.034	.000												
		Δ Steel	.000	.000	.006	.005	.000	.000	.000	.000	.004	.005	.000												
	G3	Elev. Top of Web	474.483	474.492	474.691	474.830	474.923	474.972	475.003	475.013	474.982	474.913	474.791												
		Δ Total	.000	.000	.038	.031	.000	-.001	.000	.000	.023	.028	.000												
		Δ Steel	.000	.000	.006	.005	.000	.000	.000	.000	.004	.004	.000												

See following sheet for notes and girder elevation and section.

GIRDER CAMBER
STRUCTURAL STEEL

SHEET A103

COMMONWEALTH OF KENTUCKY
DEPARTMENT OF HIGHWAYS
FRANKFORT
COUNTY OF
JEFFERSON

I64-13TH ST. TO 7TH ST.
LOUISVILLE— LEXINGTON ROAD
SP 56-273-11L

STATION 208+08 **P. E. PROJECT NO.** I 64-2(35)3

CONSTRUCTION PROJECT NO.	MAINTENANCE PROJECT NO.	DRAWING NO.
		18572

LETTING DATE

DATE DATE DATE

REVISED REVISED REVISED

DESIGNED BY C.B.F. E.E.L.L. CHECKED BY DATE
DETAILED BY BMD CHECKED BY DATE
TRACED BY CHECKED BY DATE

EASTBOUND ROADWAY

Unit	Girder	Floorbeam No.	℄ Susp.	1*(Typ)	2	3	4	5	6	7	8	9	10	11	12	13	14	15	16	17	18	19	20	21	22	℄ Susp.
I	G2	Elev. Top of Web	488.063	488.052	487.876	487.650	487.386	487.137	486.927	486.731	486.500	486.234	485.983	485.770	485.571	485.334	485.073									485.058
		Δ Total	.000	.003	.050	.057	.023	.000	.027	.065	.065	.027	.000	.023	.057	.050	.003									.000
		Δ Steel	.000	.000	.007	.008	.003	.000	.004	.009	.009	.004	.000	.003	.008	.007	.000									.000
	G4	Elev. Top of Web	488.762	488.751	488.574	488.348	488.086	487.836	487.623	487.423	487.192	486.931	486.683	486.469	486.268	486.031	485.772									485.757
		Δ Total	.000	.002	.048	.055	.023	.000	.024	.058	.058	.024	.000	.023	.055	.048	.002									.000
		Δ Steel	.000	.000	.007	.008	.004	.000	.004	.009	.009	.004	.000	.004	.008	.007	.000									.000
II	G2	Elev. Top of Web	485.058	485.046	484.837	484.604	484.360	484.147	483.943	483.729	483.448	483.098	482.732	482.446	482.175	481.895	481.613	481.328	481.012	480.640	480.270	479.976	479.681	479.339	478.953	478.932
		Δ Total	.000	.002	.020	.013	-.005	.000	.066	.128	.130	.070	.000	-.014	-.008	-.006	.000	.041	.058	.025	.000	.029	.063	.054	.003	.000
		Δ Steel	.000	.000	.003	.002	-.001	.000	.010	.012	.019	.011	.000	-.002	-.001	-.001	.000	.006	.009	.004	.000	.004	.009	.008	.000	.000
	G4	Elev. Top of Web	485.757	485.739	485.451	485.141	484.819	484.583	484.376	484.160	483.881	483.530	483.119	482.884	482.613	482.332	482.049	481.760	481.443	481.073	480.706	480.411	480.119	479.776	479.390	479.368
		Δ Total	.000	.001	.018	.013	-.003	.000	.063	.123	.127	.066	.000	-.013	-.006	-.005	.000	.037	.052	.022	.000	.028	.064	.055	.003	.000
		Δ Steel	.000	.001	.003	.002	.000	.000	.010	.019	.020	.010	.000	-.002	-.001	-.001	.000	.006	.008	.003	.000	.004	.010	.009	.000	.000
III	G2	Elev. Top of Web	478.932	478.917	478.608	478.236	477.835	477.474	477.178	476.903	476.565	476.162	475.711	475.287	474.930	474.618	474.274	473.892								473.872
		Δ Total	.000	.003	.041	.033	-.003	.000	.069	.158	.185	.146	.060	.000	.008	.049	.054	.003								.000
		Δ Steel	.000	.001	.007	.006	-.001	.000	.012	.027	.032	.025	.010	.000	.001	.008	.009	.001								.000
	G4	Elev. Top of Web	479.368	479.354	479.069	478.722	478.350	478.019	477.756	477.508	477.203	476.824	476.397	475.995	475.657	475.351	475.013	474.636								474.616
		Δ Total	.000	.003	.038	.028	-.006	.000	.074	.164	.196	.155	.065	.000	.003	.047	.053	.003								.000
		Δ Steel	.000	.000	.006	.005	-.001	.000	.012	.027	.033	.026	.011	.000	.000	.008	.009	.000								.000
IV	G2	Elev. Top of Web	473.872	473.858	473.590	473.274	472.930	472.620	472.391	472.209	472.017	471.853	471.784	471.742	471.707	471.689										
		Δ Total	.000	.003	.066	.080	.040	.000	.019	.048	.029	.000	.017	.039	.029	.000										
		Δ Steel	.000	.000	.009	.011	.006	.000	.003	.007	.004	.000	.003	.006	.004	.000										
	G4	Elev. Top of Web	474.531	474.521	474.325	474.088	473.828	473.598	473.446	473.336	473.229	473.164	473.176	473.151	473.111	473.089										
		Δ Total	.000	.003	.059	.073	.038	.000	.013	.030	.013	.000	.027	.048	.033	.000										
		Δ Steel	.000	.001	.010	.013	.007	.000	.002	.005	.002	.000	.005	.008	.006	.000										
	G6	Elev. Top of Web	474.616	474.602	474.322	473.961	473.568	473.231	473.013	472.834	472.605	472.357	472.160	471.964	471.810											
		Δ Total	.000	.003	.066	.078	.038	.000	.022	.054	.035	.000	.007	.015	.000											
		Δ Steel	.000	.000	.009	.011	.005	.000	.003	.008	.005	.000	.001	.002	.000											
V	G2	Elev. Top of Web		471.638	471.646	471.675	471.758	471.882	472.051	472.224	472.441	472.652	472.883	473.090												473.103
		Δ Total		.000	.020	.009	.000	.042	.070	.042	.000	.009	.020	.000												.000
		Δ Steel		.000	.003	.001	.000	.006	.010	.006	.000	.001	.003	.000												.000
	G4	Elev. Top of Web		473.037	473.045	473.074	473.158	473.281	473.450	473.623	473.840	474.051	474.283	474.490												474.503
		Δ Total		.000	.020	.009	.000	.042	.070	.042	.000	.009	.020	.000												.000
		Δ Steel		.000	.003	.001	.000	.006	.010	.006	.000	.001	.003	.000												.000
VI	G2	Elev. Top of Web	473.103	473.113	473.373	473.613	473.824	474.062	474.271	474.514	474.741	474.952	475.198	475.437	475.702	475.939	476.145									
		Δ Total		.000	.064	.075	.035	.000	.022	.058	.058	.022	.000	.035	.075	.064	.000									
		Δ Steel		.000	.010	.012	.006	.000	.003	.009	.009	.003	.000	.006	.012	.010	.000									
	G4	Elev. Top of Web	474.503	474.513	474.776	475.014	475.220	475.461	475.673	475.922	476.149	476.355	476.597	476.834	477.104	477.342	477.544									
		Δ Total		.000	.068	.078	.033	.000	.026	.068	.068	.026	.000	.033	.078	.068	.000									
		Δ Steel		.000	.010	.012	.005	.000	.004	.010	.010	.004	.000	.005	.012	.010	.000									

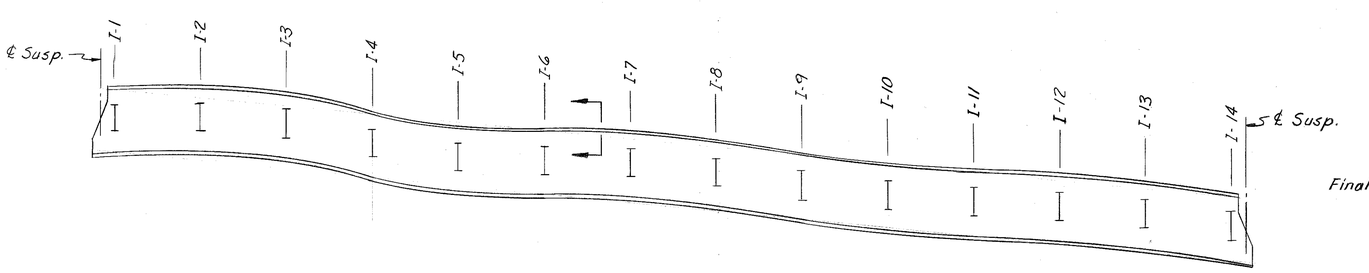

ELEVATION OF GIRDERS - UNIT I (EB) SHOWN
(Other Units Similar)

* Prefix with Unit Number for Floorbeam Number

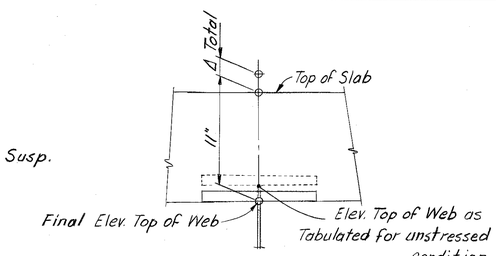

SECTION THRU GIRDER

NOTE:
All deflections are shown in feet. Elevations given are for the unstressed condition and contain all dead load camber. All girders must be cambered in the unstressed condition. Should the theoretical final elevation at top of web be desired subtract Δ Total from elevations given. Use Δ Total for Camber.
Stringers are to be placed so any natural camber will conform to the grade.
For Camber in Stringer System see Sheets A142 - A144
Floorbeams are to be built with no camber except as noted.

SHEET A104

GIRDER CAMBER
STRUCTURAL STEEL

COMMONWEALTH OF KENTUCKY
DEPARTMENT OF HIGHWAYS
FRANKFORT
COUNTY OF
JEFFERSON
I64-13TH ST. TO 7TH ST.
LOUISVILLE — LEXINGTON ROAD
SP 56-273-UL
STATION 208+08 **P. E. PROJECT NO.** I 64-2(35) 3

CONSTRUCTION PROJECT NO.	MAINTENANCE PROJECT NO.	DRAWING NO.
		18572

LETTING DATE

DESIGNED BY ___ CHECKED BY ___ DATE ___ REVISED
DETAILED BY C.B.R. & E.L.W. CHECKED BY BMD DATE 3-71 REVISED
TRACED BY ___ CHECKED BY ___ DATE ___ REVISED
DATE ___ DATE ___ DATE ___

FED. ROAD DIST.	STATE	FED. AID PROJ. NO.	FISCAL YEAR	SHEET NO.	TOTAL SHEETS
7	KY.				

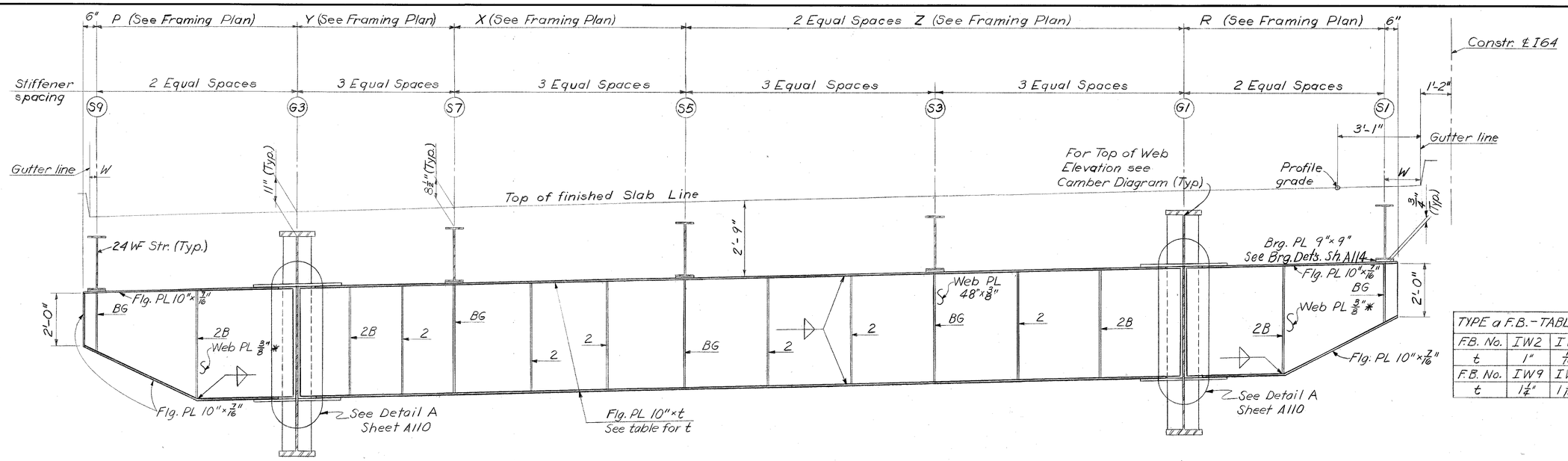

TYPE a F.B. - TABLE OF FLANGE THICKNESS					
F.B. No.	IW2	IW3	IW5	IW6	IW7
t	1"	15/16"	1"	1 1/8"	1 1/2"
F.B. No.	IW9	IW10	IW11	IIW2	IIW3
t	1 1/4"	1 5/16"	1 5/16"	1 5/16"	1 5/16"

ELEVATION TYPE a FLOORBEAMS

For Location See Framing Plan

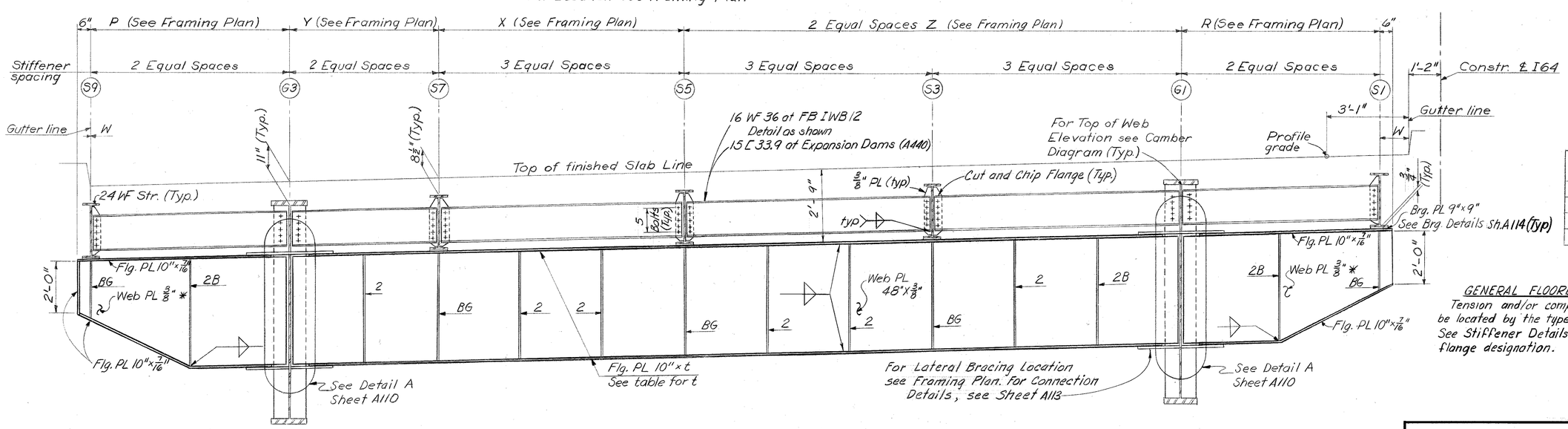

TYPE a' FB - TABLE OF FLANGE THICKNESS		
FB No.	IW1	IW12
t	1/2"	1 3/8"
FB No.	IW13	IIW1
t	13/16"	13/16"

GENERAL FLOORBEAM NOTES (Con't)

Tension and/or compression flanges may be located by the type of stiffeners used. See Stiffener Details Sheet A106 for tension flange designation.

ELEVATION TYPE a' FLOORBEAMS

For Location See Framing Plan

Notes:
* For Web depth, see Detail A, Sheet A110
For Stiffener Details see Sheet A106

GENERAL FLOORBEAM NOTES

Floorbeams are detailed a constant dimension below Top of finished Slab Line so that Top of F.B. Webs follow the slope (Unless Noted). Contractor may make top of Floorbeams straight and vary Stringer Bearing thickness. (3" max. thickness). See Construction Elevation Sheets for "W" Dimension.
Floorbeams to be built with No Camber (Unless Noted)
All steel in Floorbeams and Diaphragms A 36 (Unless Noted)
All Stiffeners are Vertical.
All horizontal dimensions shown shall be corrected for grade where applicable.

FLOORBEAMS
STRUCTURAL STEEL

SHEET A105

COMMONWEALTH OF KENTUCKY
DEPARTMENT OF HIGHWAYS
FRANKFORT
COUNTY OF
JEFFERSON
I64-13TH ST. TO 7TH ST.
LOUISVILLE – LEXINGTON
ROAD SP 56-273-IIL
STATION 208+08 **PROJECT NO. I 64-2(35)3**

BRIDGE NUMBER	DRAWING NO.	INDEX
	18572	

DESIGNED BY RBS DATE 8/70 CHECKED BY MDC REVISED DATE
DETAILED BY LL & JWB DATE 1/71 CHECKED BY TS REVISED DATE
TRACED BY DATE CHECKED BY DATE REVISED DATE

FED. ROAD DIST.	STATE	FED. AID PRO. NO.	FISCAL YEAR	SHEET NO.	TOTAL SHEETS
7	KY.				

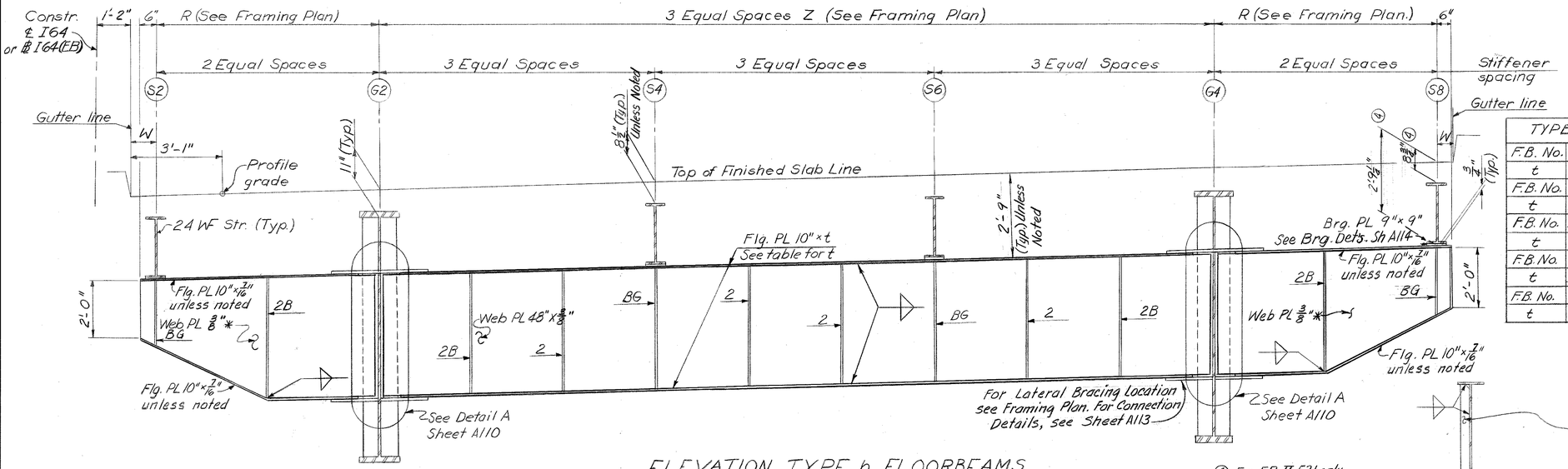

ELEVATION TYPE b FLOORBEAMS

For Location See Framing Plan

④ For FB II E21 only

TYPE b FLOORBEAMS - TABLE OF FLANGE THICKNESS										
F.B. No.	I E2	I E3	I E4	I E6	I E7	I E8	I E9	I E11	I E12	I E13
t	9/16"	1/2"	9/16"	9/16"	9/16"	9/16"	9/16"	9/16"	1/2"	9/16"
F.B. No.	II E2	II E3	II E4	II E6	II E7	II E8	II E9	II E11	II E12	II E13
t	9/16"	1/2"	1/2"	9/16"	9/16"	9/16"	9/16"	1/2"	1/2"	1/2"
F.B. No.	II E15	II E16	II E17	II E19	II E20	II E21		V E2	V E3	V E5
t	9/16"	9/16"	9/16"	1/2"	9/16"	5/8"★		5/8"★	9/16"	9/16"
F.B. No.	V E6	V E7	V E9	V E10		VI E2	VI E3	VI E4	VI E6	VI E7
t	9/16"	9/16"	9/16"	5/8"★		11/16"	9/16"	9/16"	9/16"	9/16"
F.B. No.	VI E8	VI E9	VI E11	VI E12	VI E13					
t	9/16"	9/16"	9/16"	9/16"	11/16"					

★ Cantilever Flg. PL 10" x 1/2"

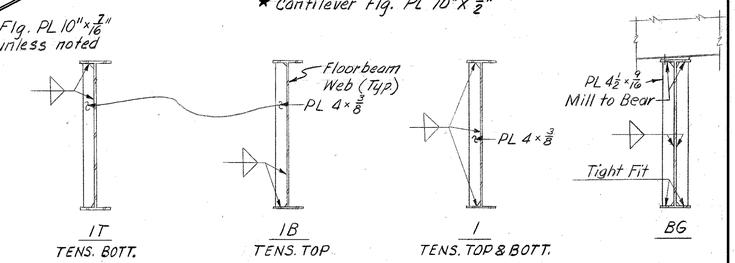

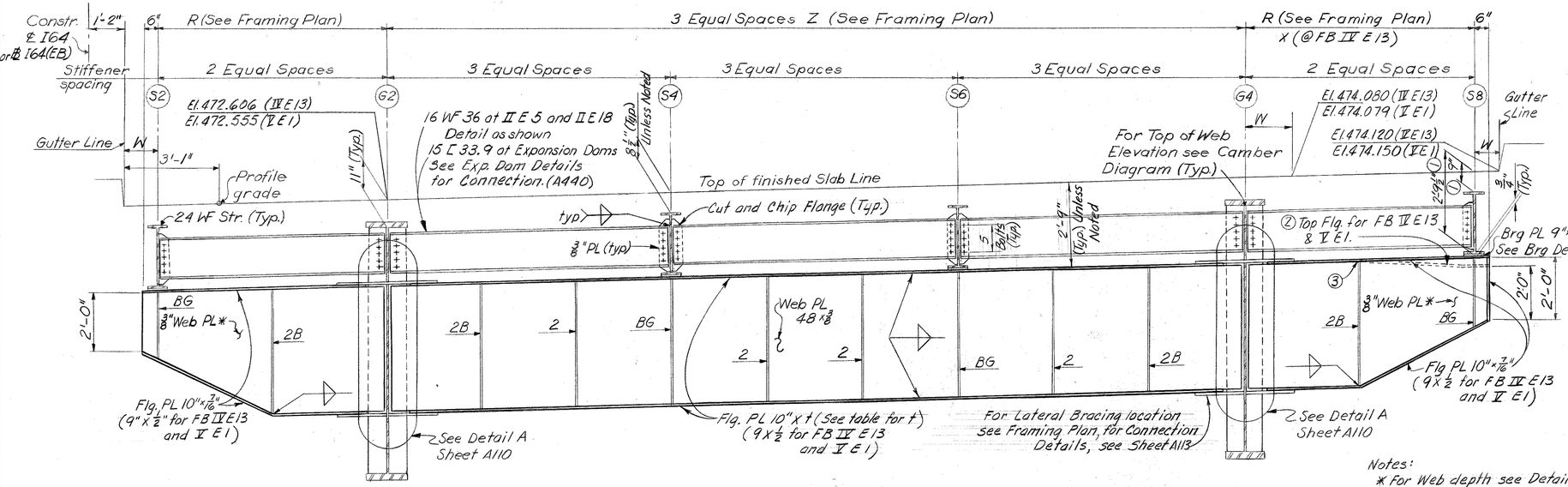

ELEVATION TYPE b' FLOORBEAMS

For Location See Framing Plan

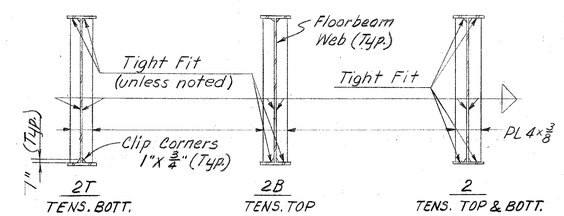

STIFFENER DETAILS FOR FLOORBEAMS

TYPE b' F.B. - TABLE OF FLANGE THICKNESS					
F.B. No.	I E1	I E14	II E1	II E5	II E18
t	7/16"	7/16"	7/16"	9/16"	9/16"
F.B. No.	II E22	III E13	V E1	VI E11	VI E1
t	7/16"	⊗	⊗	7/16"	7/16"

⊗ See Elevation

Notes:
* For Web depth see Detail A Sheet A110
For other notes see Sheet A105
① For FB II E22 only
② Bend to conform with elevations shown above and for 8½" dim. @ S8
③ Bend to obtain a 9" dim. @ ①

FLOORBEAMS
STRUCTURAL STEEL

SHEET A106

COMMONWEALTH OF KENTUCKY
DEPARTMENT OF HIGHWAYS
FRANKFORT
COUNTY OF
JEFFERSON
I64-13TH ST. TO 7TH ST.
LOUISVILLE - LEXINGTON
ROAD SP 56-273-11L
STATION 208+08 **PROJECT NO.** I64-2(35)3

BRIDGE NUMBER	DRAWING NO.	INDEX
	18572	

DESIGNED BY RBS DATE 8/70 REVISED DATE
DETAILED BY LLB & JMB DATE 1-71 REVISED DATE
TRACED BY DATE REVISED DATE
CHECKED BY MDC DATE
CHECKED BY Birch DATE
CHECKED BY DATE

FED. ROAD DIST.	STATE	FED. AID PRO. NO.	FISCAL YEAR	SHEET NO.	TOTAL SHEETS
7	KY.				

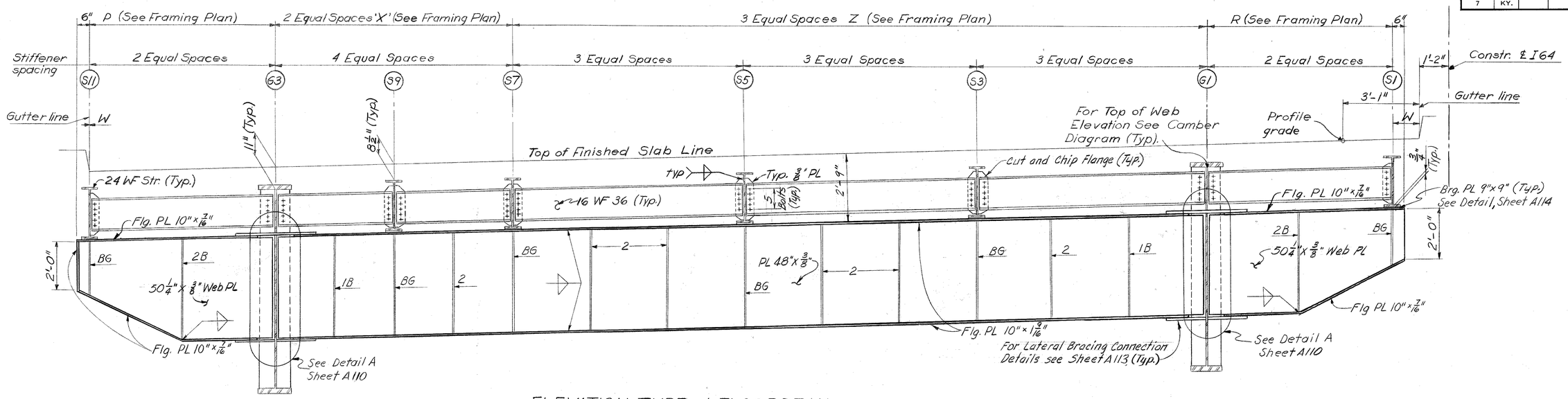

ELEVATION TYPE c' FLOORBEAM

For Location See Framing Plan
(FB II W5 - Pier 29 WB)

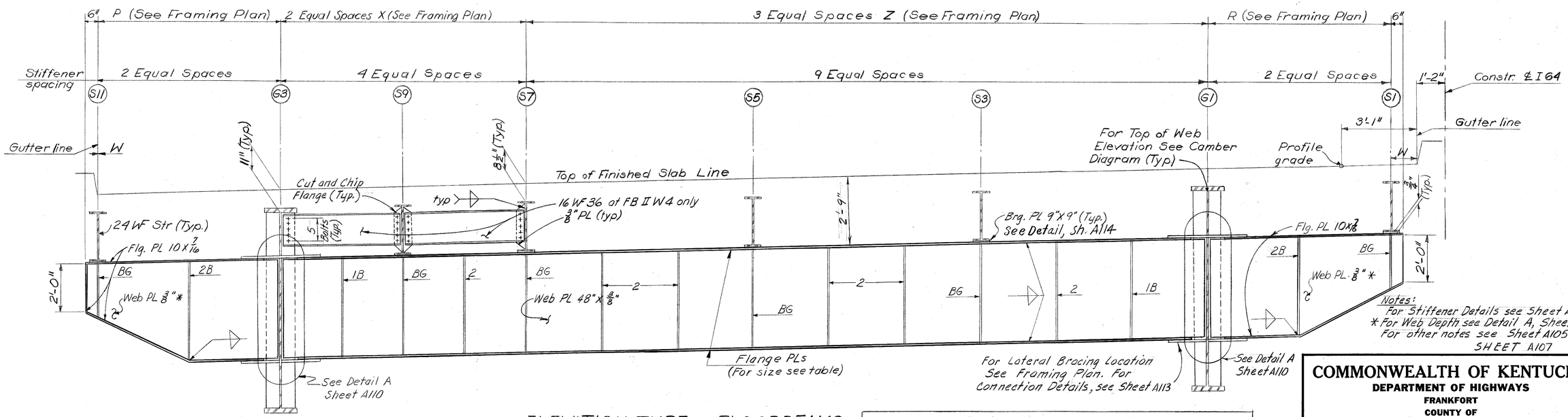

Notes:
For Stiffener Details see Sheet A106
* For Web Depth see Detail A, Sheet A110
For other notes see Sheet A105
SHEET A107

ELEVATION TYPE c FLOORBEAMS

For Location See Framing Plan

TYPE c FLOORBEAM									
F.B. No.	II W4	II W6	II W7	II W8	II W9	II W11	II W12	II W13
Flg. PL	10" x 1 5/16"	12" x 1 1/2"	12" x 1 1/2"	12" x 1 1/2"	12" x 1 1/2"	14" x 1 1/8"	14" x 1 1/8"	14" x 1 3/8"

FLOORBEAMS
STRUCTURAL STEEL

COMMONWEALTH OF KENTUCKY
DEPARTMENT OF HIGHWAYS
FRANKFORT
COUNTY OF
JEFFERSON
I64-13TH ST. TO 7TH ST.
LOUISVILLE - LEXINGTON
ROAD SP 56-273-11L
STATION 208+08 **PROJECT NO.** I64-2(35)3

BRIDGE NUMBER	DRAWING NO.	INDEX
	18572	

DESIGNED BY RBS	CHECKED BY MDC	DATE 8/70	REVISED
DETAILED BY LLB	CHECKED BY	DATE 1-71	REVISED
TRACED BY JMB	CHECKED BY	DATE	REVISED

FED. ROAD DIST.	STATE	FED. AID PRO. NO.	FISCAL YEAR	SHEET NO.	TOTAL SHEETS
7	KY.				

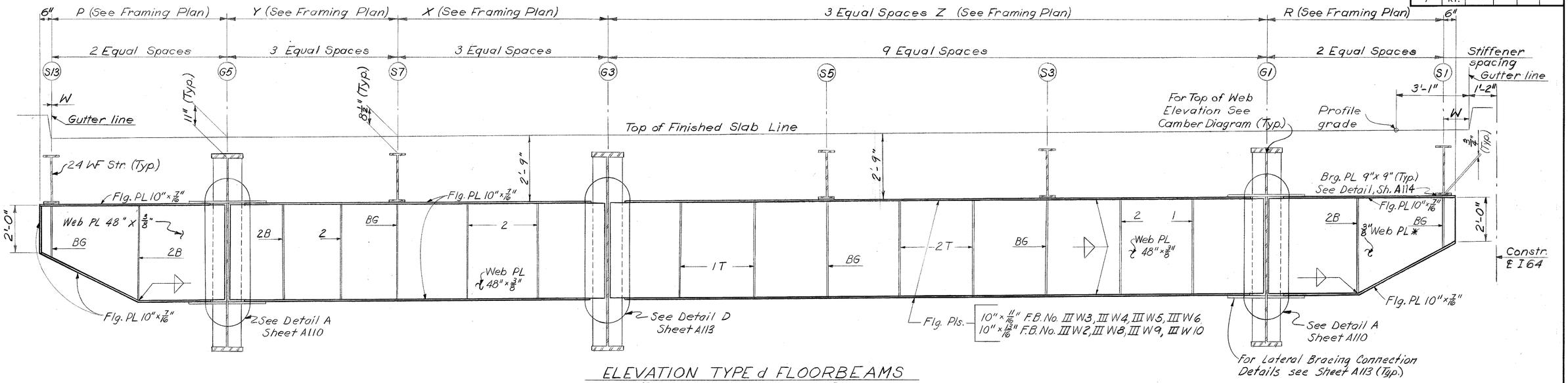

ELEVATION TYPE d FLOORBEAMS

For Location See Framing Plan

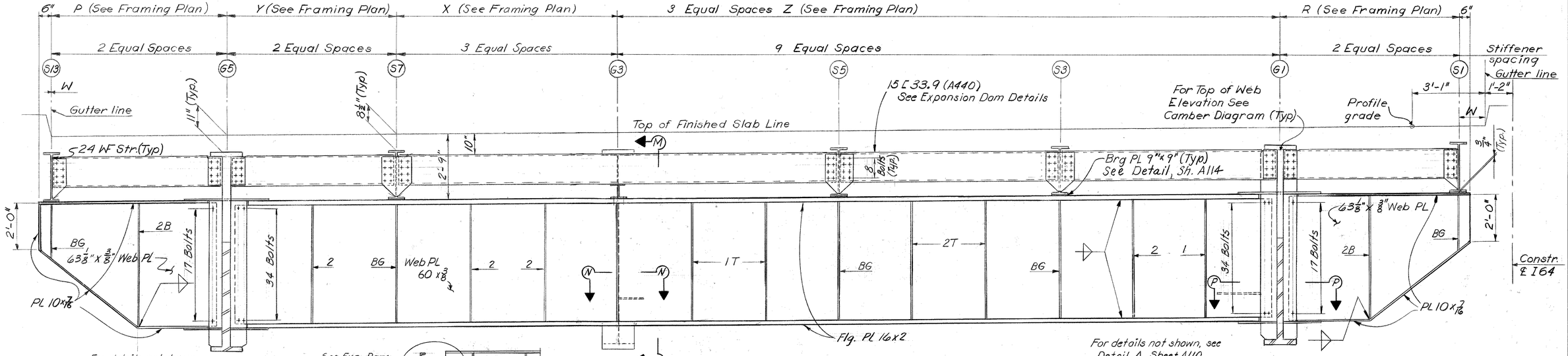

SHEET A108

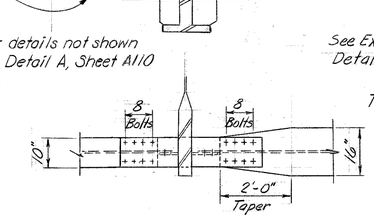

FLANGE SPLICE - G1 & G5

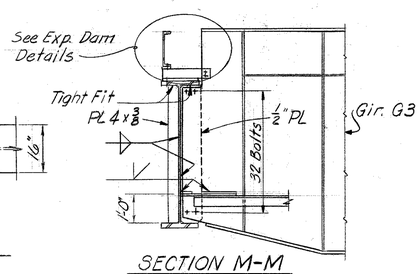

SECTION M-M

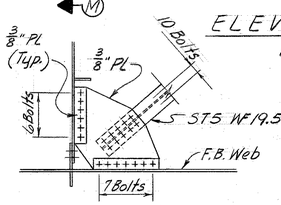

SECTION N-N

ELEVATION TYPE d' FLOORBEAM

For Location See Framing Plan
(@ III W1 - Pier 31 WB)

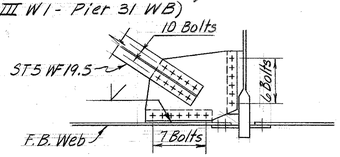

SECTION P-P

Notes:
For Stiffener details see Sheet A106
* For Web depth see Detail A, Sheet A110
For other notes see Sheet A105

FLOORBEAMS
STRUCTURAL STEEL

COMMONWEALTH OF KENTUCKY
DEPARTMENT OF HIGHWAYS
FRANKFORT
COUNTY OF
JEFFERSON

I64 - 13TH ST. TO 7TH ST.
LOUISVILLE – LEXINGTON
ROAD SP 56-273-11L

STATION 208+08 **PROJECT NO.** I64-2(35)3

BRIDGE NUMBER	DRAWING NO.	INDEX
	18572	

DESIGNED BY TJS	CHECKED BY TMD	DATE 9/13	REVISED DATE
DETAILED BY LLF 10/13	CHECKED BY BLeL	DATE 1-11	REVISED DATE
TRACED BY	CHECKED BY	DATE	REVISED DATE

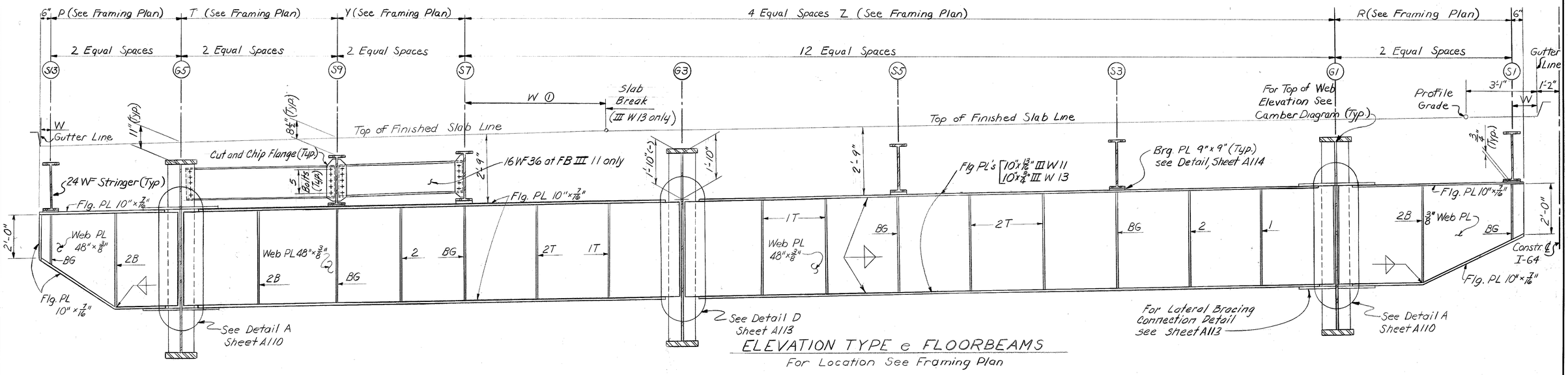

ELEVATION TYPE e FLOORBEAMS

For Location See Framing Plan

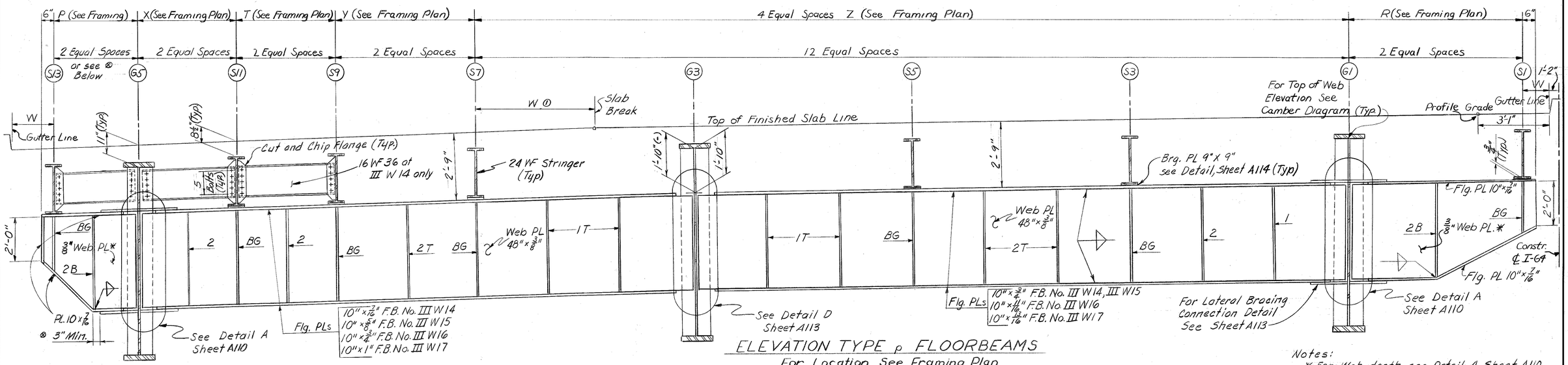

ELEVATION TYPE p FLOORBEAMS

For Location See Framing Plan

Notes:
✱ For Web depth see Detail A, Sheet A110
For Stiffener Details see Sheet A106
For other notes see Sheet A105

SHEET A109

FINAL TOP OF SLAB ELEVATIONS					Dimen.
	@G5	@Break	@G3	@G1	W ①
F.B. III W13	477.479	477.937	477.988	478.424	6.040
W14	476.891	477.594	477.660	478.095	5.094
W15	476.314	477.250	477.331	477.767	4.148
W16	475.803	476.907	477.003	477.438	3.202
W17	475.402	476.564	476.674	477.110	2.256

FLOORBEAMS
STRUCTURAL STEEL

COMMONWEALTH OF KENTUCKY
DEPARTMENT OF HIGHWAYS
FRANKFORT
COUNTY OF
JEFFERSON
I 64-13TH ST. TO 7TH ST.
LOUISVILLE - LEXINGTON ROAD
SP 56-273-11L
STATION 208+08
P.E. PROJECT NO. I 64-2 (35) 3

CONSTRUCTION PROJECT NO.	MAINTENANCE PROJECT NO.	DRAWING NO.
		18572

LETTING DATE

DESIGNED BY RBS DATE 8-70 CHECKED BY MDC
DETAILED BY LL DATE 1-71 CHECKED BY BSL
TRACED BY JFK DATE CHECKED BY
REVISED DATE REVISED DATE REVISED DATE

FED. ROAD DIST.	STATE	FED. AID PRO. NO.	FISCAL YEAR	SHEET NO.	TOTAL SHEETS
7	KY.				

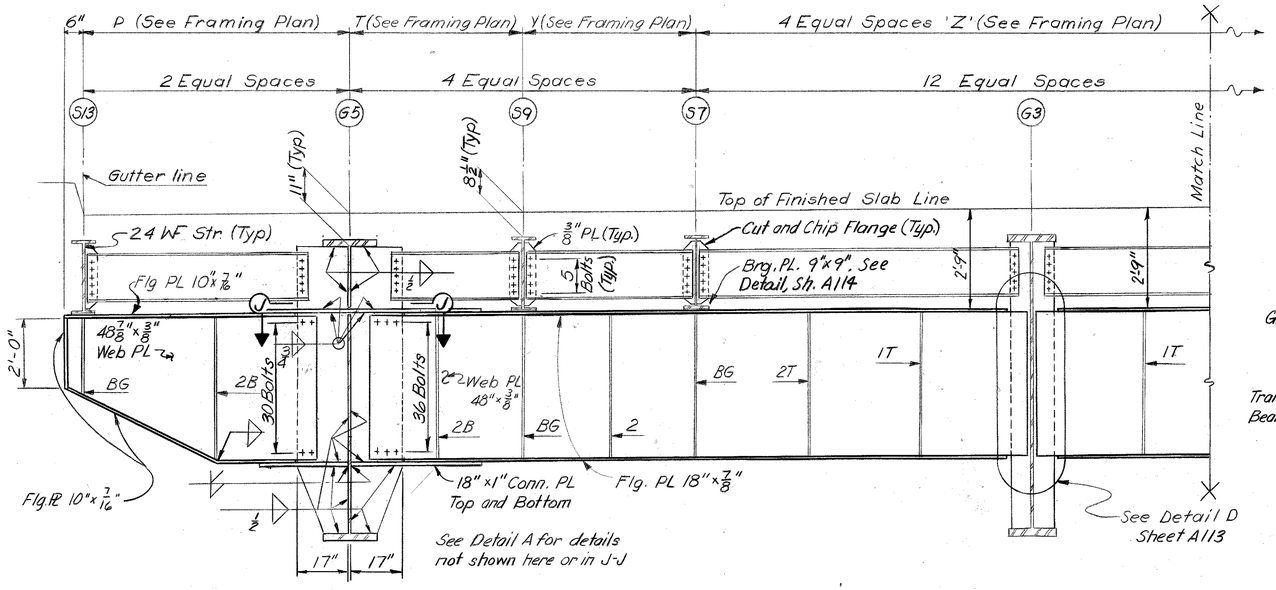

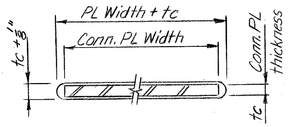

SLOT DETAIL

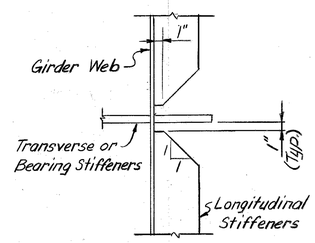

LONGITUDINAL STIFFENER DETAIL

Where F.B Conn. Pls and Long. Stiffeners interfere, omit Long. Stiffener in area of Connection Pls.

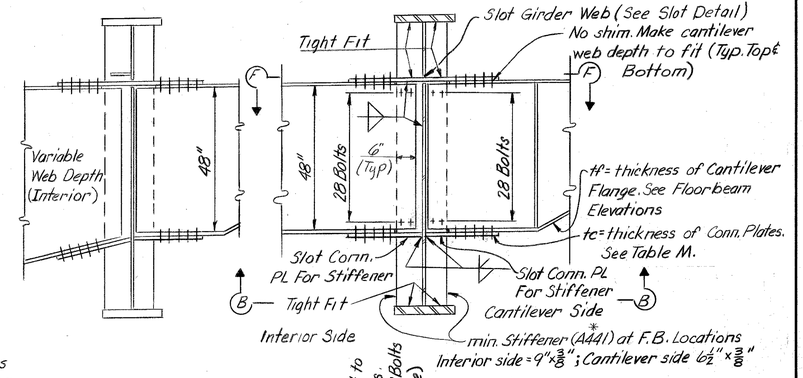

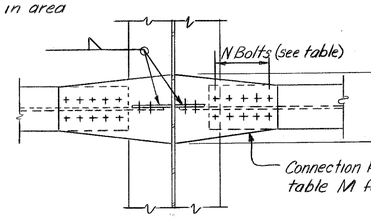

SECTION B-B

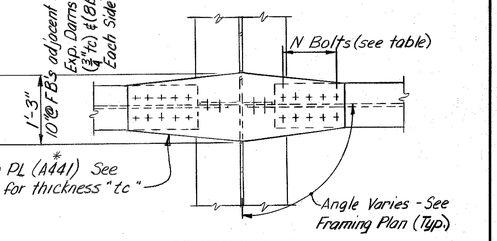

SECTION F-F

Note: At ends of Units connect F.B. Web to side of Brg. Stiffeners away from Exp. Dam.

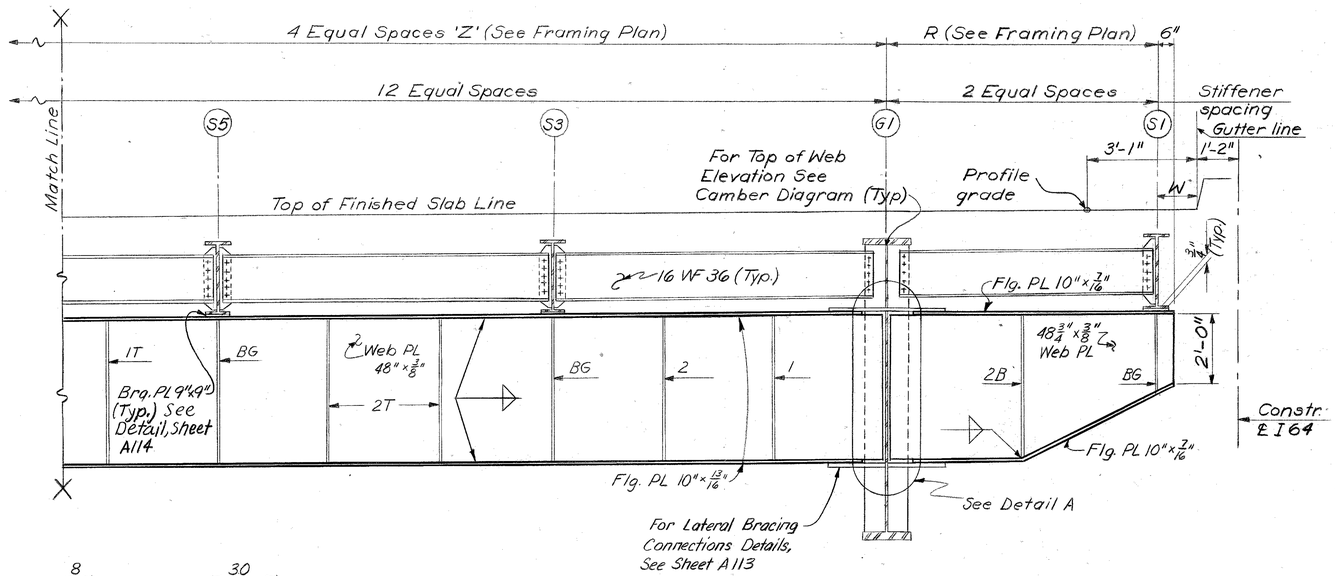

ELEVATION TYPE e' FLOORBEAM

For Location See Framing Plan (FB III W12 @ Pier 33 WB)

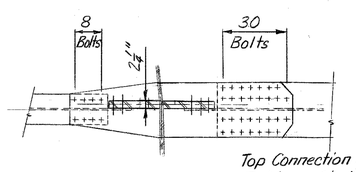

SECTION J-J

DETAIL A

For Bottom Flange Connections with Lateral Bracing Connection See Sheet A113

TABLE M (Conn PL A441*)		
tf	tc	N
7/16"	5/8"	8
1/2"	11/16"	10
9/16"	11/16"	12
5/8"	11/16"	12
11/16"	3/4"	14

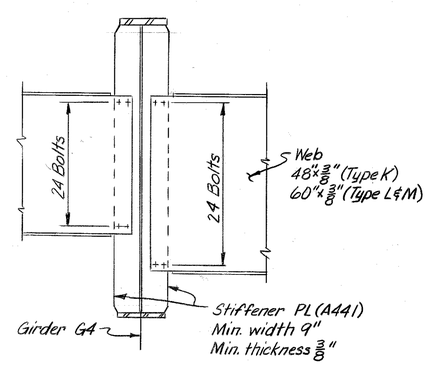

DETAIL B

Notes: * A36 in Unit VII WB
For Stiffener Details See Sheet A106
For other notes See Sheet A105

SHEET A110

FLOORBEAMS STRUCTURAL STEEL

DESIGNED BY R.B.S. DATE 8/70 REVISED DATE
DETAILED BY L.L.B. JMB CHECKED BY M.D.C. DATE 2-71 REVISED DATE
TRACED BY CHECKED BY R.B.L. DATE REVISED DATE

COMMONWEALTH OF KENTUCKY
DEPARTMENT OF HIGHWAYS
FRANKFORT
COUNTY OF
JEFFERSON
I64-13TH ST. TO 7TH ST.
LOUISVILLE – LEXINGTON
ROAD SP 56-273-11L
STATION 208+08 **PROJECT NO.** I 64-2(35)3

BRIDGE NUMBER	DRAWING NO.	INDEX
	18572	

FED. ROAD DIST.	STATE	FED. AID PRO. NO.	FISCAL YEAR	SHEET NO.	TOTAL SHEETS
7	KY.				

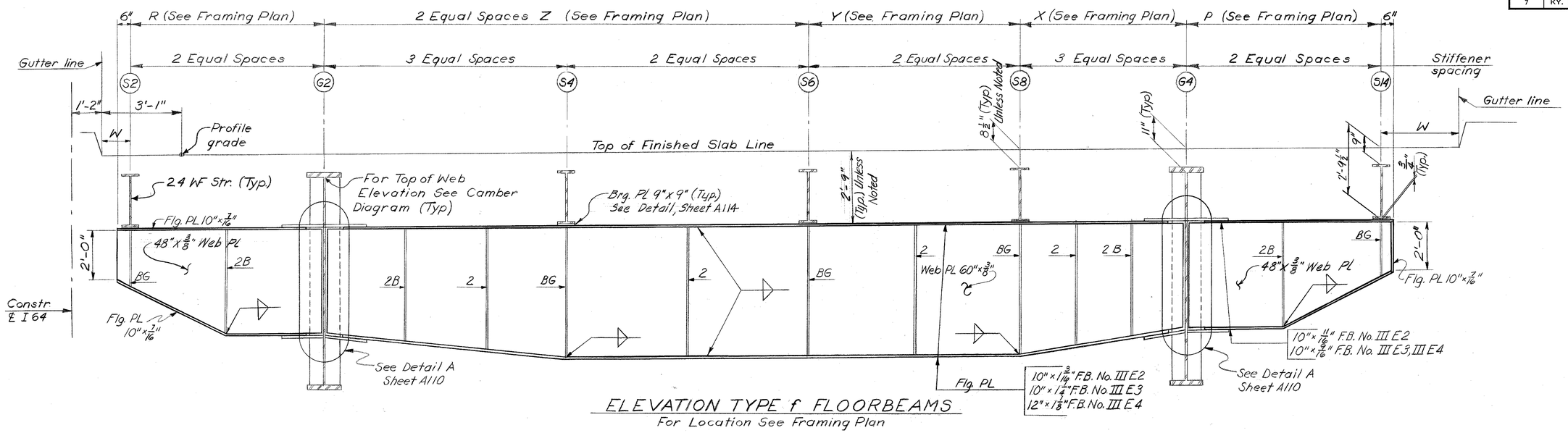

ELEVATION TYPE f FLOORBEAMS

For Location See Framing Plan

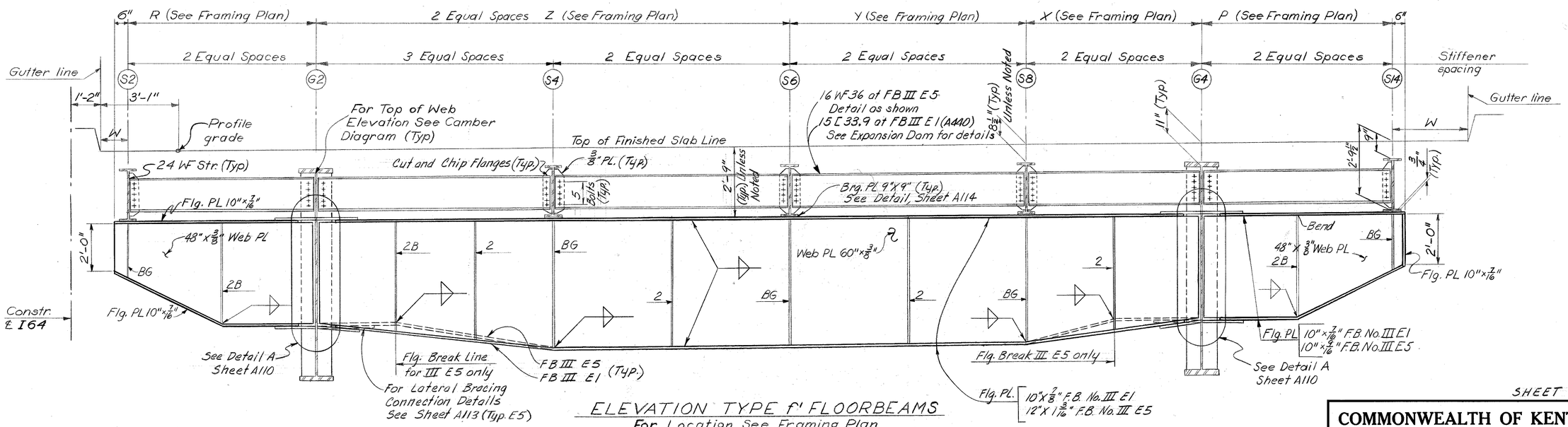

ELEVATION TYPE f' FLOORBEAMS

For Location See Framing Plan

Notes:
For Stiffener Details, see Sheet A106
For other notes see Sheet A105

FLOORBEAMS
STRUCTURAL STEEL

SHEET A111

COMMONWEALTH OF KENTUCKY
DEPARTMENT OF HIGHWAYS
FRANKFORT
COUNTY OF
JEFFERSON

I64-13TH ST. TO 7TH ST.
LOUISVILLE – LEXINGTON
ROAD

SP 56-273-11L

STATION 208+08 **PROJECT NO.** I64-2(35)3

BRIDGE NUMBER	DRAWING NO.	INDEX
	18572	

DESIGNED BY TBS DATE 8-70 REVISED DATE
DETAILED BY LL & JMB DATE 1-71 REVISED DATE
TRACED BY CHECKED BY MDC REVISED DATE
CHECKED BY Bmk

FED. ROAD DIST.	STATE	FED. AID PRO. NO.	FISCAL YEAR	SHEET NO.	TOTAL SHEETS
7	KY.				

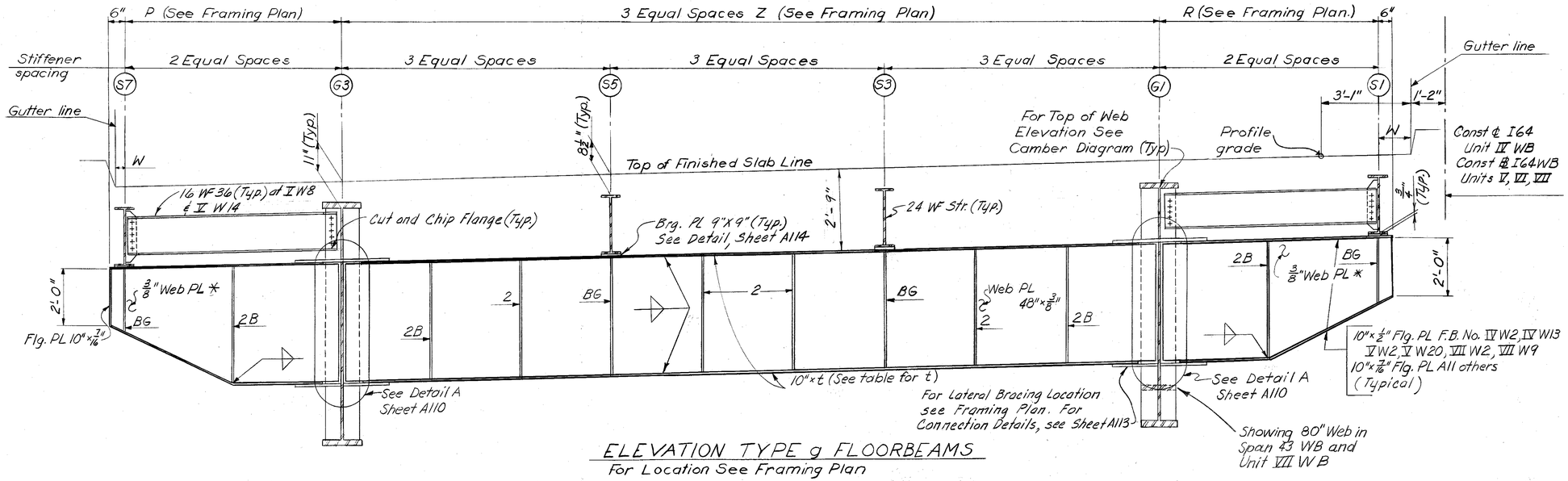

ELEVATION TYPE g FLOORBEAMS

For Location See Framing Plan

TYPE g FLOORBEAMS TABLE OF FLANGE TH.												
F.B. No.	IV W2	IV W3	IV W4	IV W6	IV W7	IV W8	IV W9	IV W11	IV W12	IV W13		
t	5/8	1/2	9/16	9/16	9/16	9/16	9/16	9/16	1/2	5/8		
F.B. No.	V W2	V W3	V W4	V W6	V W7	V W8	V W9	V W10	V W12	V W13	V W14	
t	5/8	9/16	9/16	1/2	1/2	1/2	1/2	1/2	1/2	1/2	1/2	
F.B. No.	V W15	V W16	V W18	V W19	V W20	VI W2	VI W3	VI W4	VI W6	VI W7		
t	1/2	1/2	9/16	9/16	5/8	9/16	1/2	1/2	1/2	1/2		
F.B. No.	VI W8	VI W10	VI W11	VI W12	VII W2	VII W3	VII W5	VII W6	VII W8	VII W9		
t	1/2	1/2	1/2	9/16	5/8	9/16	9/16	9/16	9/16	5/8		

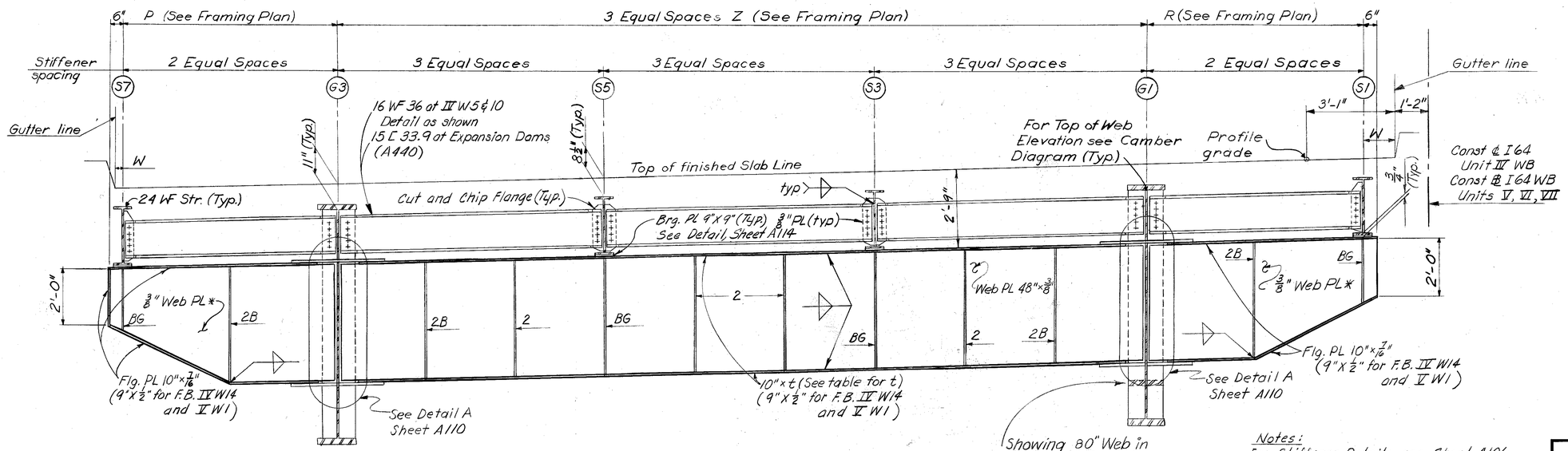

ELEVATION TYPE g' FLOORBEAMS

For Location See Framing Plan

TYPE g' FLOORBEAMS TABLE OF FLANGE TH.										
F.B. No.	IV W1	IV W5	IV W10	IV W14	V W1	V W2	VI W1	VI W3	VI W1	VI W10
t	7/16	9/16	9/16	⊗	⊗	7/16	7/16	7/16	7/16	7/16

⊗ See Elevation

Notes:

For Stiffener Details see Sheet A106

* For Web depth see Detail A Sheet A110

For other notes see Sheet A105

FLOORBEAMS STRUCTURAL STEEL

SHEET A112

DESIGNED BY 7235 CHECKED BY RDC DATE 8/12 REVISED DATE
DETAILED BY LL & JMB CHECKED BY Blue L-EW DATE 1-11 REVISED DATE
TRACED BY CHECKED BY DATE REVISED DATE

COMMONWEALTH OF KENTUCKY

DEPARTMENT OF HIGHWAYS

FRANKFORT

COUNTY OF

JEFFERSON

I64-13TH ST. TO 7TH ST.

LOUISVILLE - LEXINGTON

ROAD SP 56-273-11L

STATION 208+08 **PROJECT NO.** I64-2(35)3

BRIDGE NUMBER	DRAWING NO.	INDEX
	18572	

FED. ROAD DIST.	STATE	FED. AID PROJ. NO.	FISCAL YEAR	SHEET NO.	TOTAL SHEETS
7	KY.				

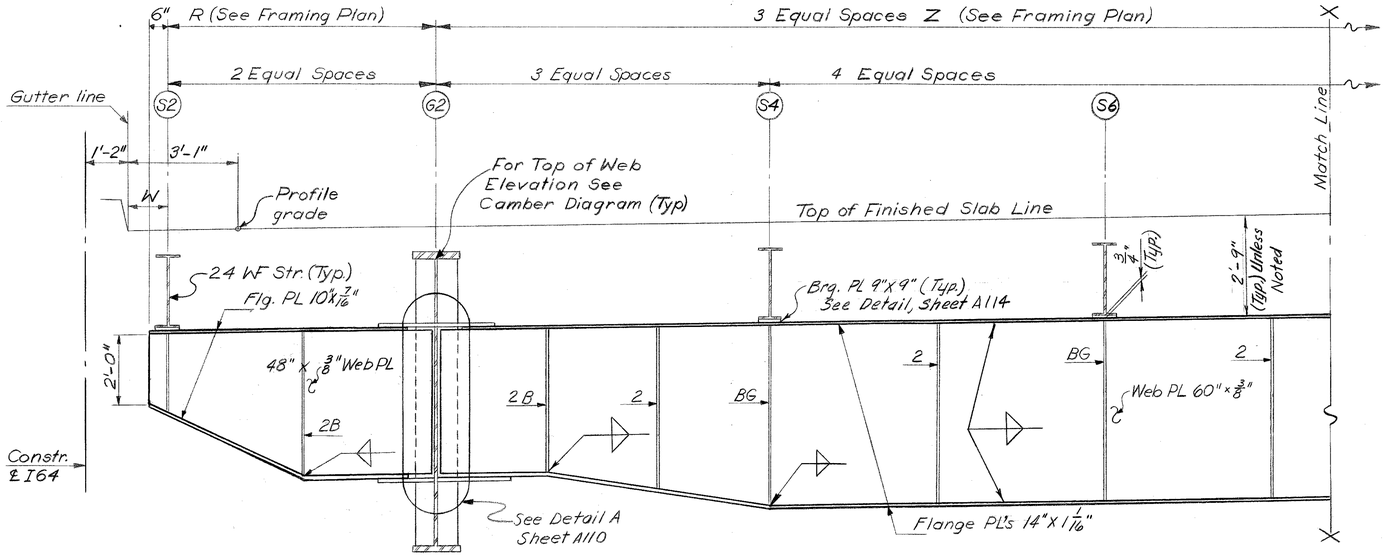

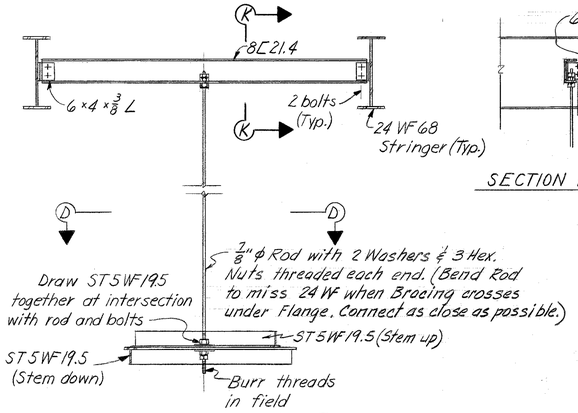

LATERAL BRACING SUPPORT

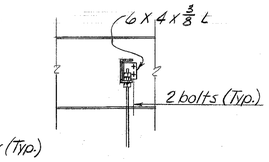

SECTION K-K

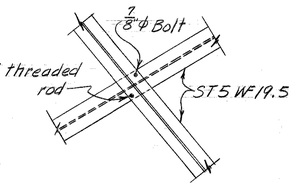

SECTION D-D

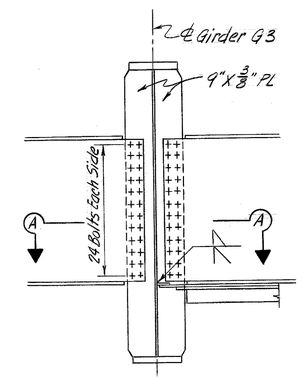

DETAIL D

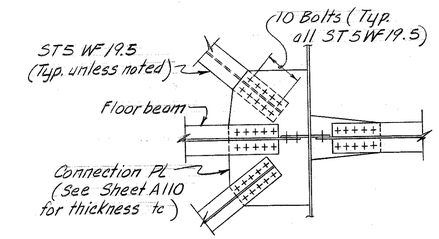

TYPICAL LATERAL BRACING CONNECTION

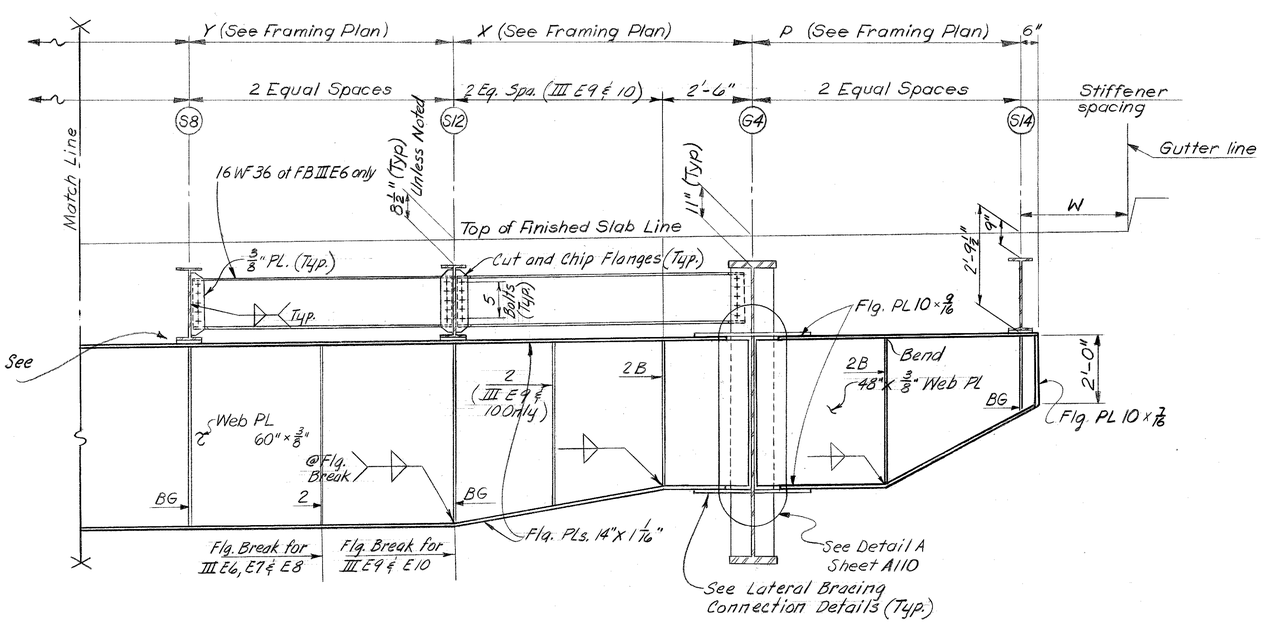

ELEVATION TYPE H FLOORBEAMS

For Location See Framing Plan

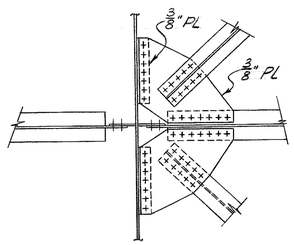

SECTION A-A

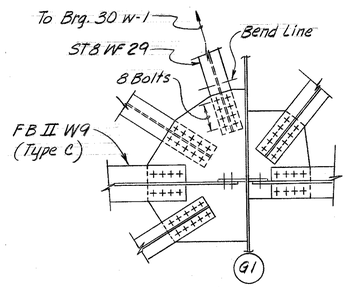

LATERAL BRACING CONNECTION AT FB II W9

Connection at FB II E9 Similar, See Framing Plan

Notes:
For Stiffener Details see Sheet A106
For other notes see Sheet A105

FLOORBEAMS
STRUCTURAL STEEL

SHEET A113

COMMONWEALTH OF KENTUCKY
DEPARTMENT OF HIGHWAYS
FRANKFORT
COUNTY OF
JEFFERSON

I64-13TH ST. TO 7TH ST.
LOUISVILLE - LEXINGTON
ROAD

SP 56-273-11L

STATION 208+08 **PROJECT NO.** I64-2(35)3

BRIDGE NUMBER	DRAWING NO.	INDEX
	18572	

DESIGNED BY RBS DATE 8-76 REVISED DATE
DETAILED BY LLB DATE 1-11 REVISED DATE
TRACED BY CHECKED BY REVISED DATE
CHECKED BY MDC CHECKED BY Rbk

FED. ROAD DIST.	STATE	FED. AID PRO. NO.	FISCAL YEAR	SHEET NO.	TOTAL SHEETS
7	KY.				

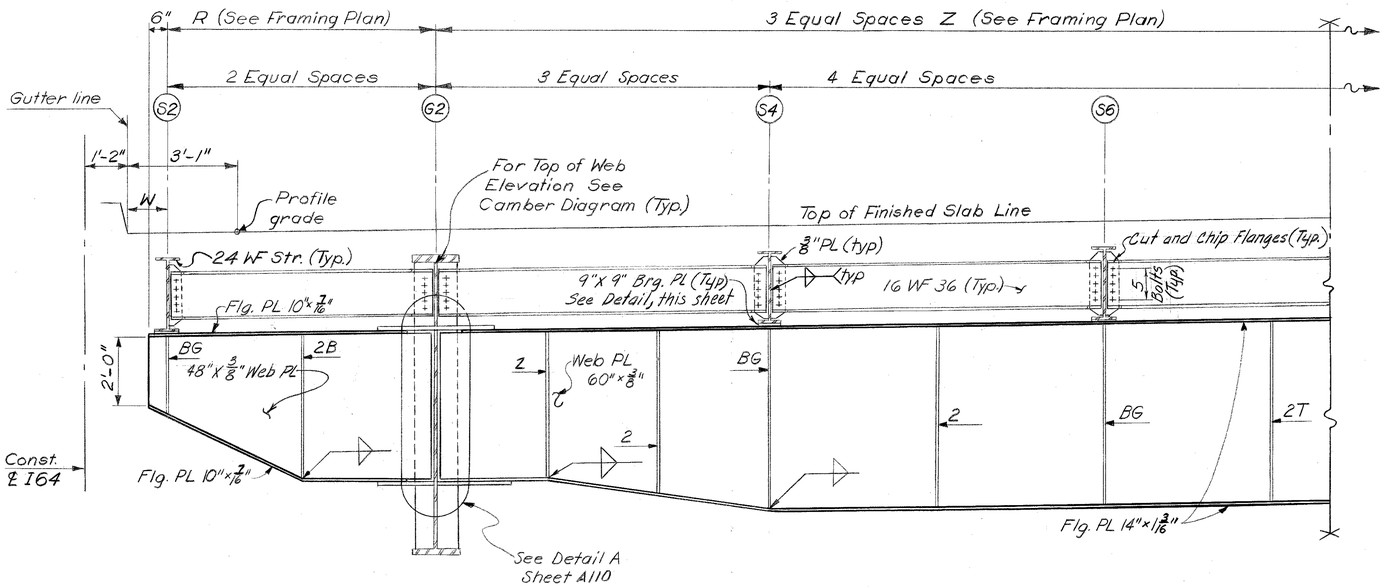

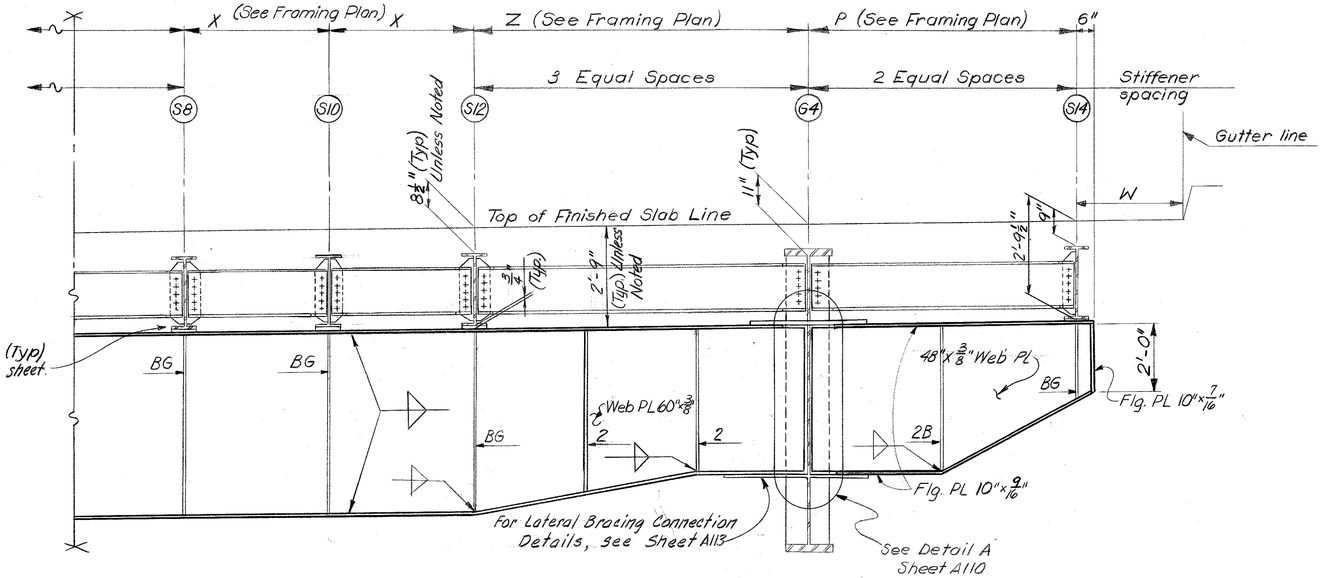

ELEVATION TYPE h' FLOORBEAM

For Location See Framing Plan
(F.B. III E11 - Pier 35 E8)

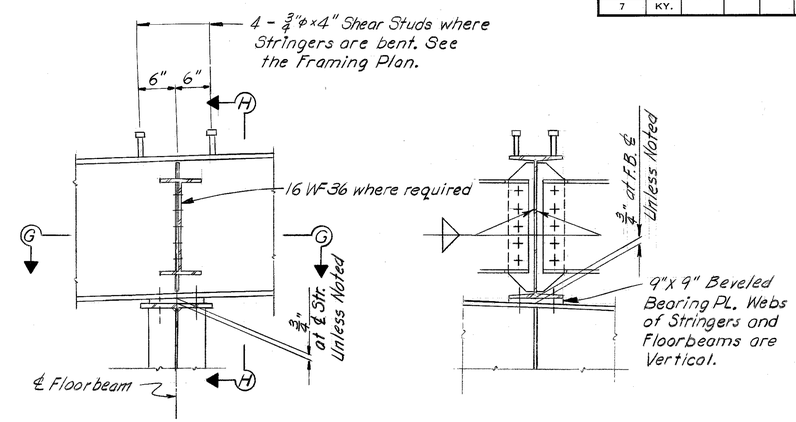

STRINGER BEARING ℄ SHEAR STUD DETAILS

SECTION H-H

Note: Bent Stringers may be bent either hot or cold, as approved by the Engineer.

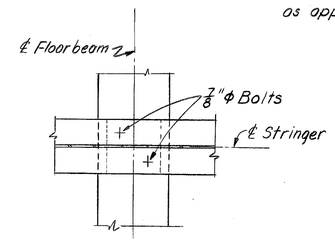

SECTION G-G

Notes:
For Stiffener Details see Sheet A106
For other notes see Sheet A105

FLOORBEAMS
STRUCTURAL STEEL

SHEET A114

COMMONWEALTH OF KENTUCKY
DEPARTMENT OF HIGHWAYS
FRANKFORT
COUNTY OF
JEFFERSON

I64-13TH ST. TO 7TH ST.
LOUISVILLE - LEXINGTON
ROAD SP 56-273-11L

STATION 208+08 **PROJECT NO.** I64-2(35)3

BRIDGE NUMBER	DRAWING NO.	INDEX
	18572	

DESIGNED BY R.B.S.	CHECKED BY MDC	DATE 8-70	REVISED DATE
DETAILED BY L.C.& J.M.B.	CHECKED BY R.L.L.	DATE 1-71	REVISED DATE
TRACED BY	CHECKED BY	DATE	REVISED DATE

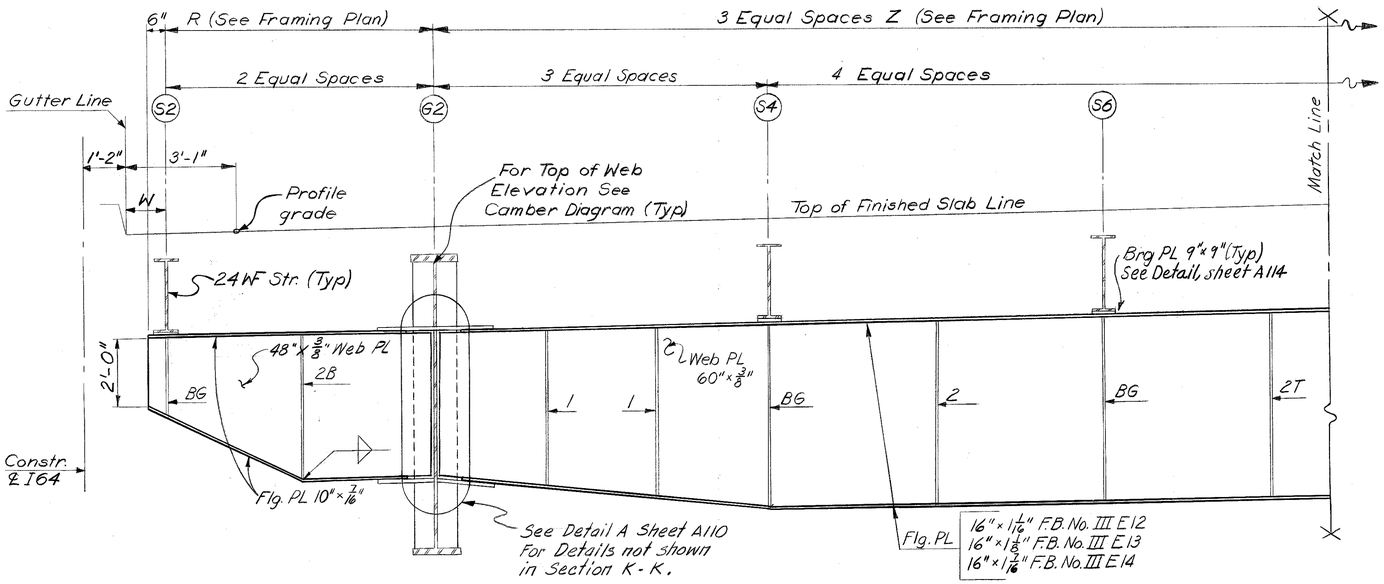

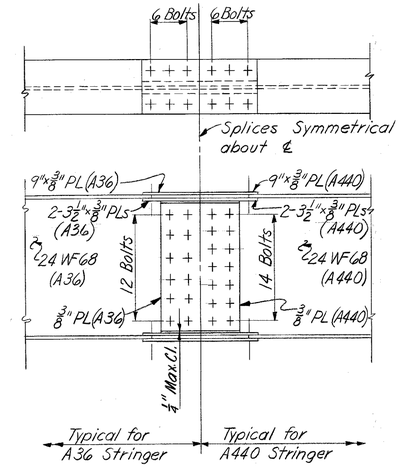

FIELD SPLICE FOR 24 WF68 STRINGER

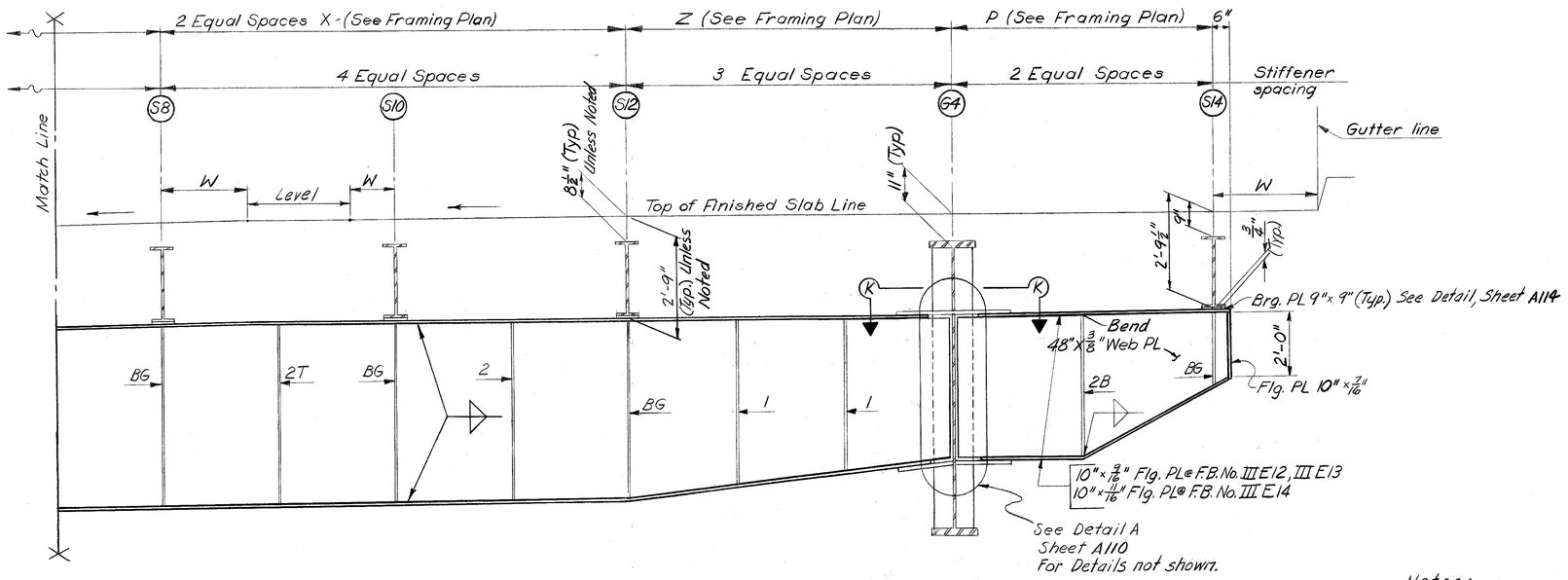

ELEVATION TYPE j FLOORBEAMS

For Location See Framing Plan

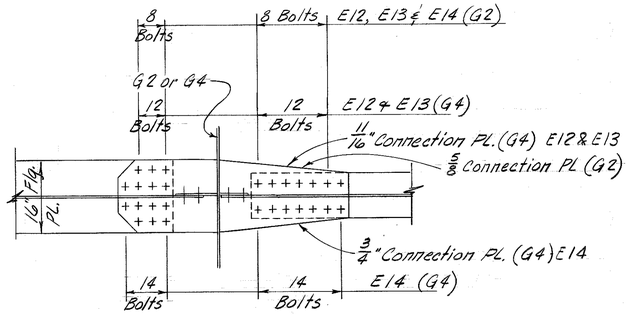

SECTION K-K

FINAL TOP OF SLAB ELEVATION			
	@G2	@Breaks	@G4
FB III E12	475.839	476.313	476.571
13	475.486	476.022	476.221
14	475.137	475.764	475.877

Notes:
For Stiffener Details see Sheet A106
For other notes see Sheet A105

FLOORBEAMS
STRUCTURAL STEEL

SHEET A115

COMMONWEALTH OF KENTUCKY
DEPARTMENT OF HIGHWAYS
FRANKFORT
COUNTY OF
JEFFERSON
I64-13TH ST. TO 7TH ST.
LOUISVILLE - LEXINGTON ROAD
STATION 208+08
SP 56-273-11L
P. E. PROJECT NO. I 64-2(35)3

CONSTRUCTION PROJECT NO.	MAINTENANCE PROJECT NO.	DRAWING NO.
		18572

LETTING DATE

DESIGNED BY LL & JMB CHECKED BY BRL DATE 1-71 REVISED
DETAILED BY CHECKED BY DATE REVISED
TRACED BY CHECKED BY DATE REVISED

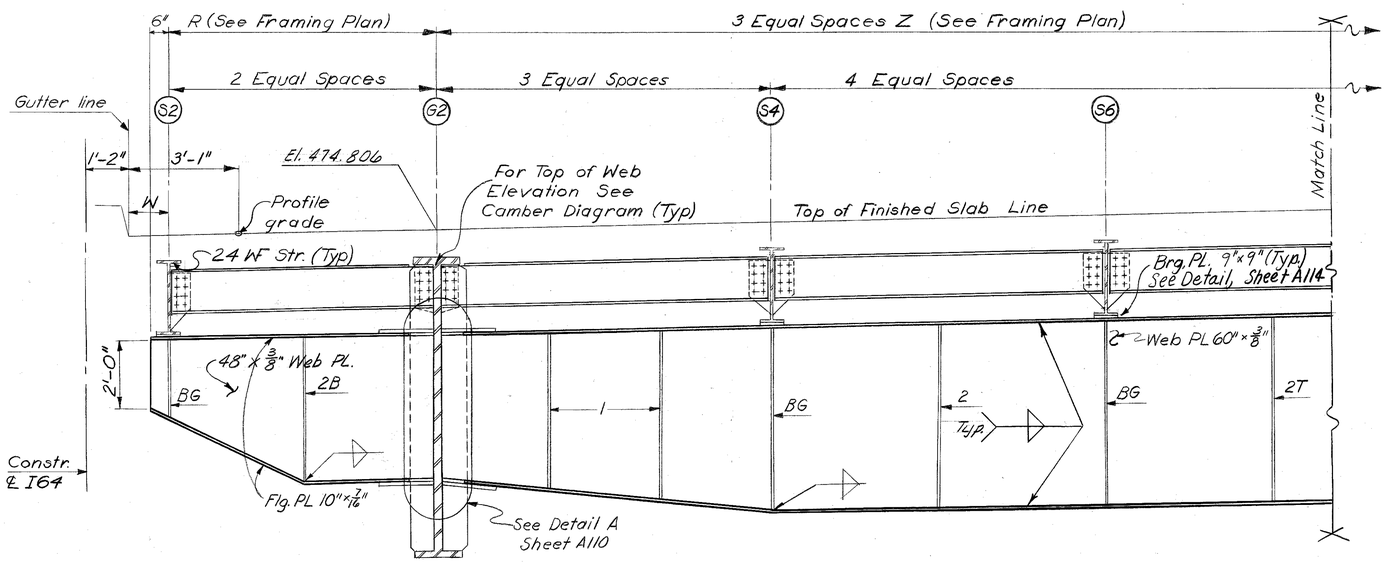

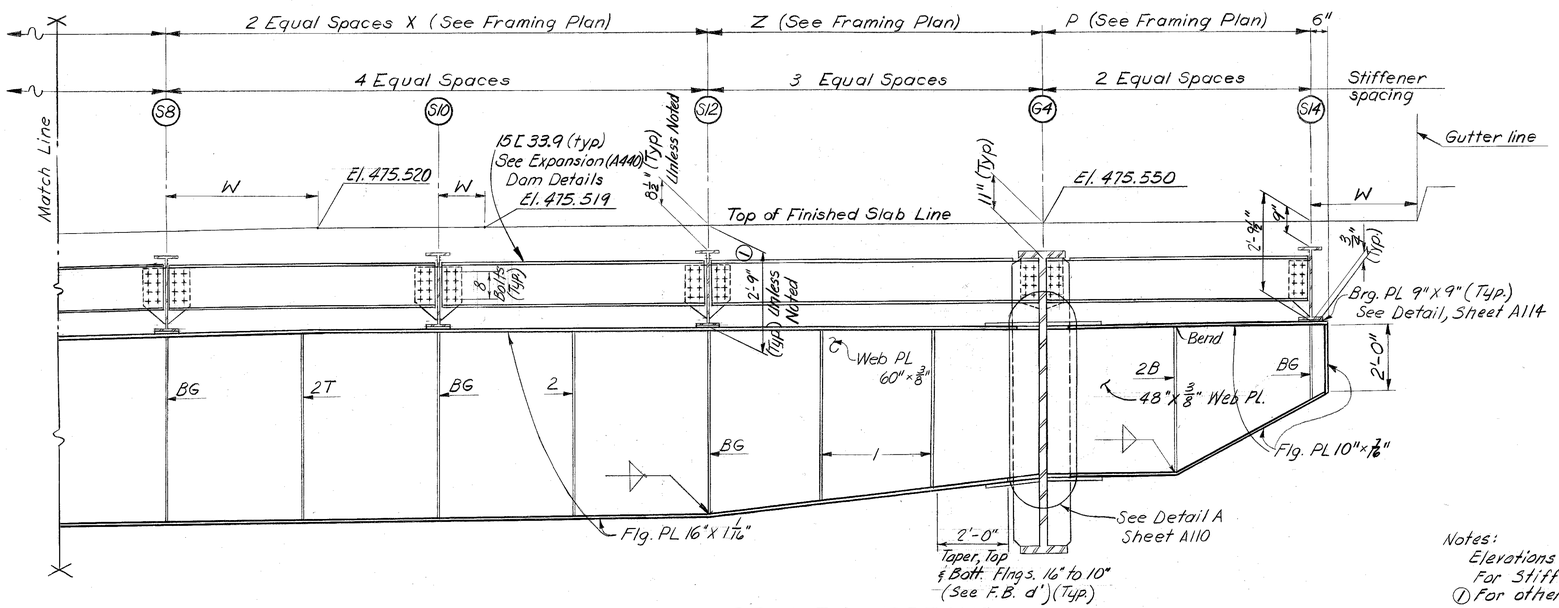

ELEVATION TYPE j' FLOORBEAMS

For Location See Framing Plan
(F.B. III E15, Pier 36 EB)

Notes:
Elevations shown are final Top of Slab.
For Stiffener Details see Sheet A106
① For other notes see Sheet A105

SHEET A116

COMMONWEALTH OF KENTUCKY
DEPARTMENT OF HIGHWAYS
FRANKFORT
COUNTY OF
JEFFERSON
I64-13TH ST. TO 7TH ST.
LOUISVILLE — LEXINGTON
ROAD SP 56-273-11L
STATION 208+08 **P. E. PROJECT NO.** I 64-2 (35) 3

CONSTRUCTION PROJECT NO.	MAINTENANCE PROJECT NO.	DRAWING NO.
		18572

FLOORBEAMS
STRUCTURAL STEEL

LETTING DATE

DESIGNED BY TJS DATE 8-72 REVISED
DETAILED BY LLA JWB DATE 1-71 REVISED
TRACED BY CHECKED BY MDC CHECKED BY BLC DATE REVISED

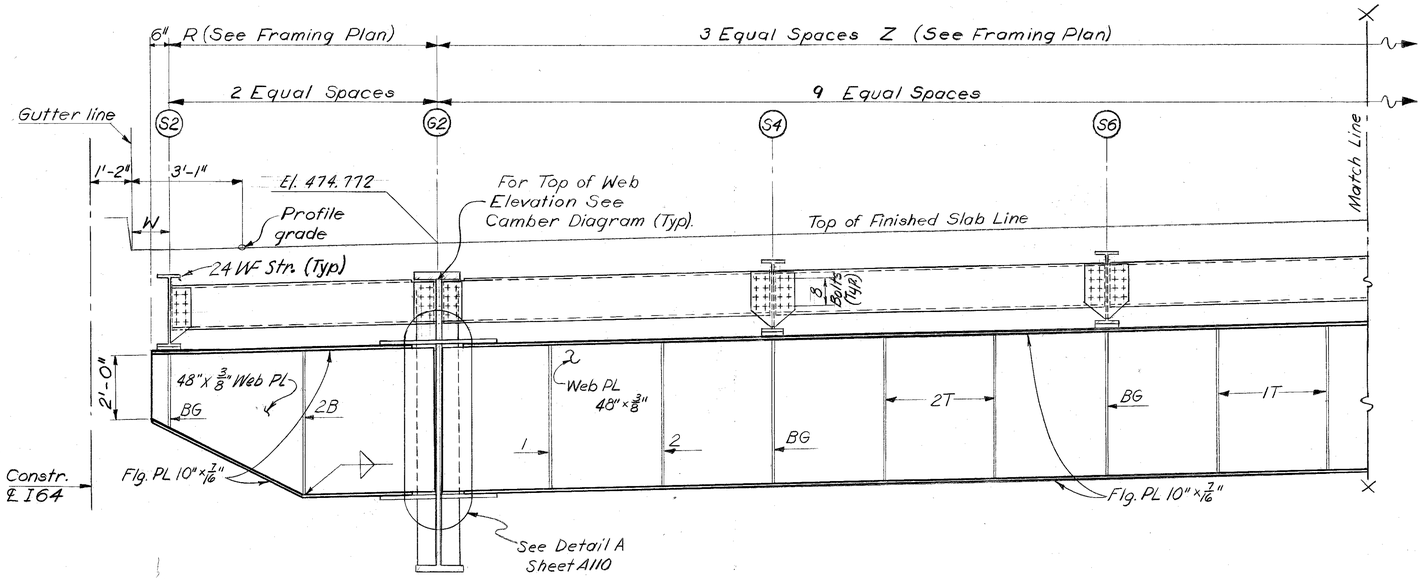

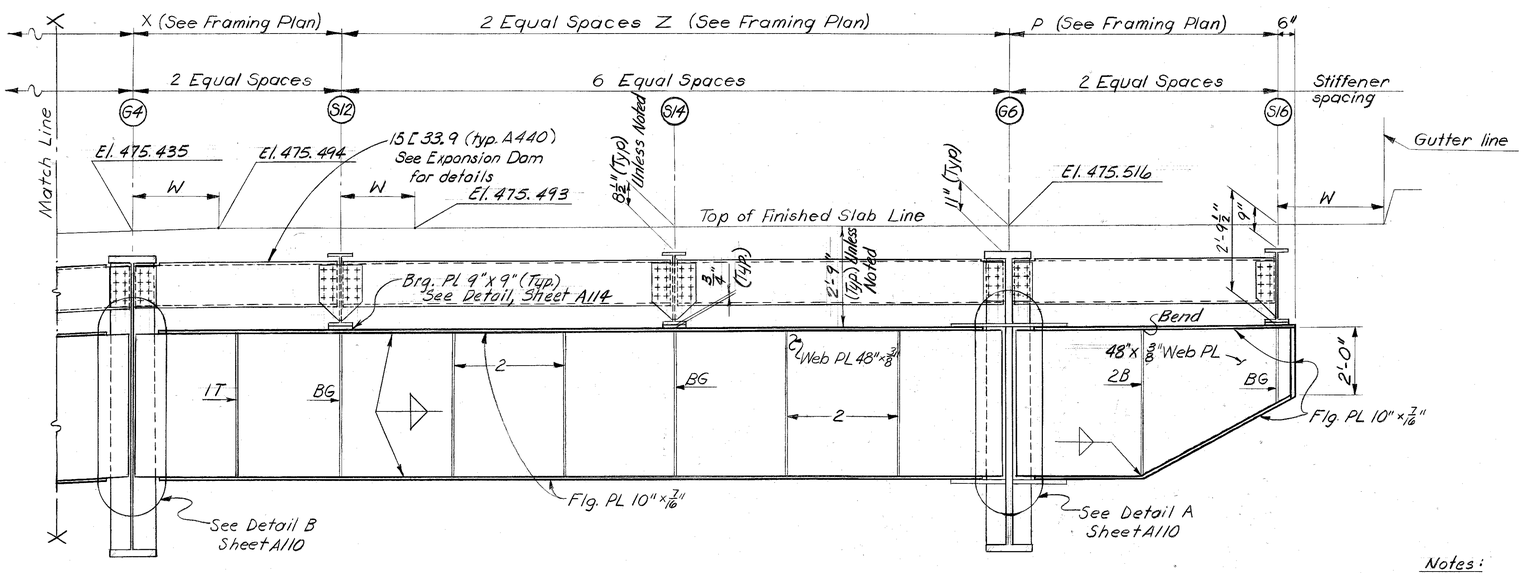

ELEVATION TYPE 'K' FLOORBEAM
For Location See Framing Plan
(F. B. IV E1 - Pier 36 EB)

Notes:
Elevations shown are final Top of Slab.
For Stiffener Details see Sheet A106
For other notes see Sheet A105

FLOORBEAMS
STRUCTURAL STEEL

SHEET A117

COMMONWEALTH OF KENTUCKY
DEPARTMENT OF HIGHWAYS
FRANKFORT
COUNTY OF
JEFFERSON
I64-13TH ST. TO 7TH ST.
LOUISVILLE—LEXINGTON ROAD
SP 56-273-11L
STATION 208+08 **P. E. PROJECT NO.** I 64-2(35)3

CONSTRUCTION PROJECT NO.	MAINTENANCE PROJECT NO.	DRAWING NO.
		18572

LETTING DATE

DESIGNED BY RBS DATE 8/70 REVISED
DETAILED BY LL & JMB DATE 1-71 REVISED
TRACED BY DATE REVISED
CHECKED BY MDC
CHECKED BY TSirel
CHECKED BY

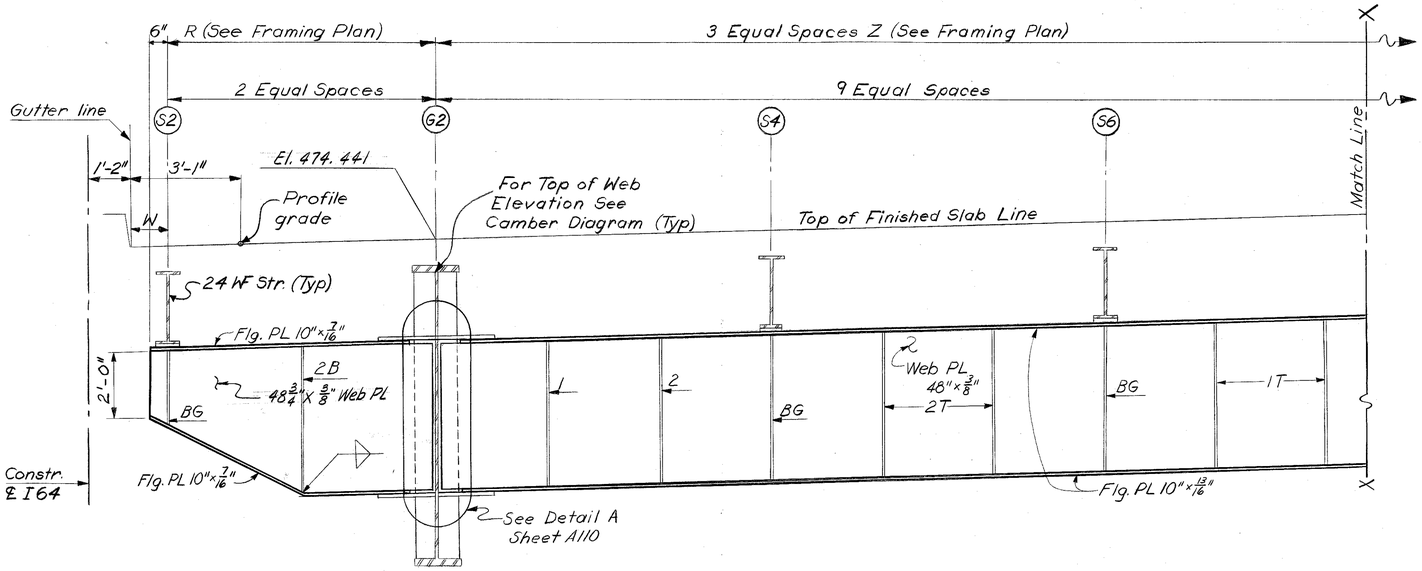

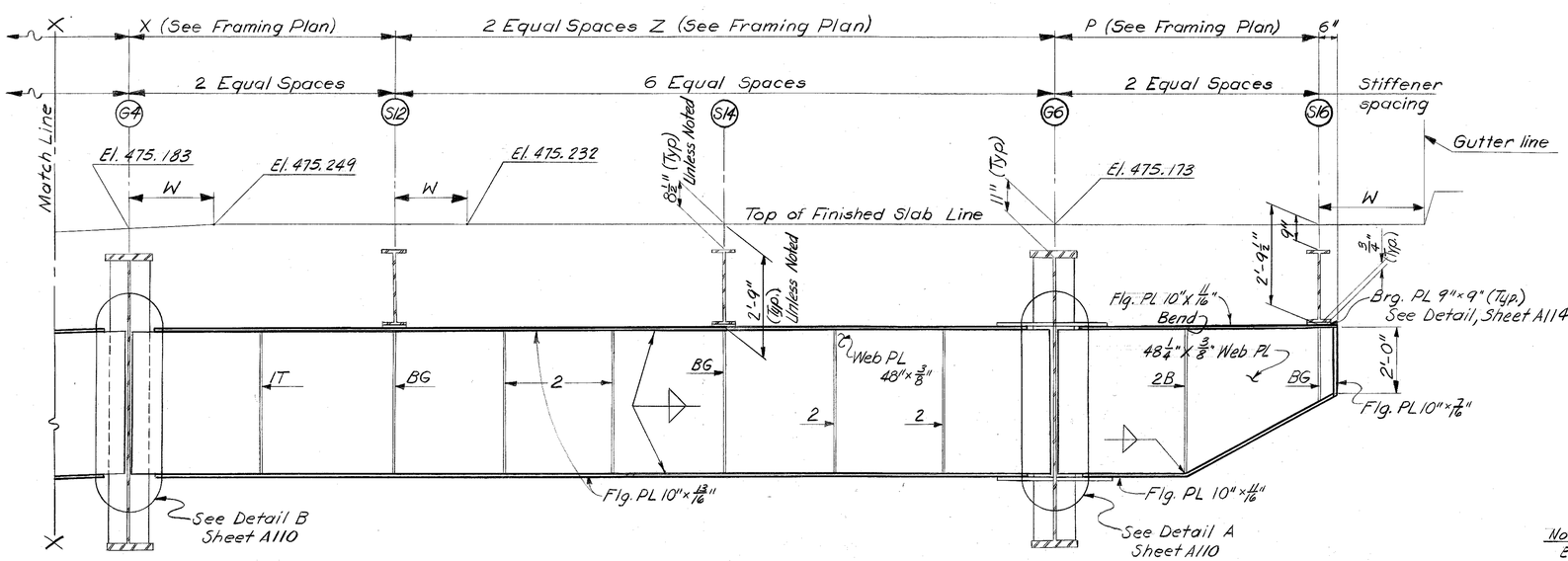

ELEVATION TYPE k FLOORBEAM

For Location See Framing Plan
(FB IV E 2)

Notes:
Elevations shown are final Top of Slab.
For Stiffener Details see Sheet A106
For Other Notes see Sheet A105

FLOORBEAMS
STRUCTURAL STEEL

SHEET A118

COMMONWEALTH OF KENTUCKY
DEPARTMENT OF HIGHWAYS
FRANKFORT
COUNTY OF
JEFFERSON
I 64-13TH ST. TO 7TH ST.
LOUISVILLE—LEXINGTON ROAD
SP 56-273-1 IL

STATION 208+08	P.E. PROJECT NO. I 64-2 (35) 3	
CONSTRUCTION PROJECT NO.	MAINTENANCE PROJECT NO.	DRAWING NO. 18572

LETTING DATE

DESIGNED BY RBS CHECKED BY MDC DATE 8-70 REVISED
DETAILED BY LC & JMB CHECKED BY BJL DATE 1-71 REVISED
TRACED BY CHECKED BY DATE REVISED

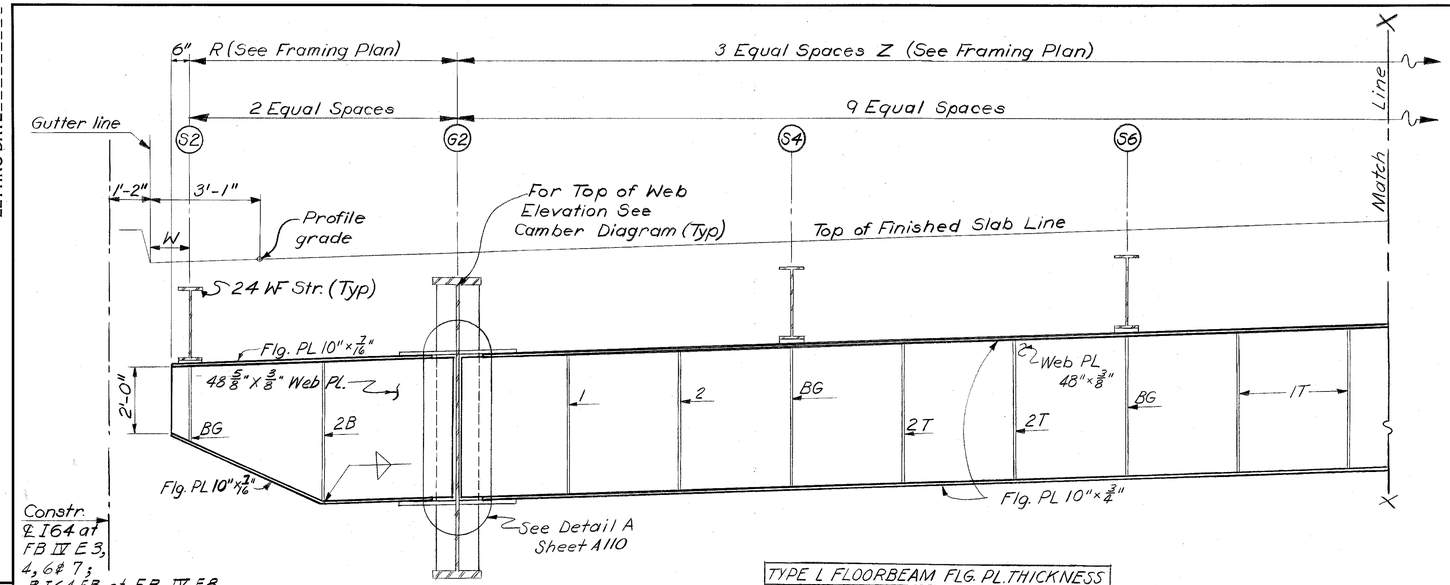

TYPE L FLOORBEAM FLG. PL. THICKNESS					
F.B. No.	IV E3	IV E4	IV E6	IV E7	IV E8
Flg. PL	12" x 7/8"	12" x 7/8"	14" x 7/8"	14" x 7/8"	14" x 7/8"

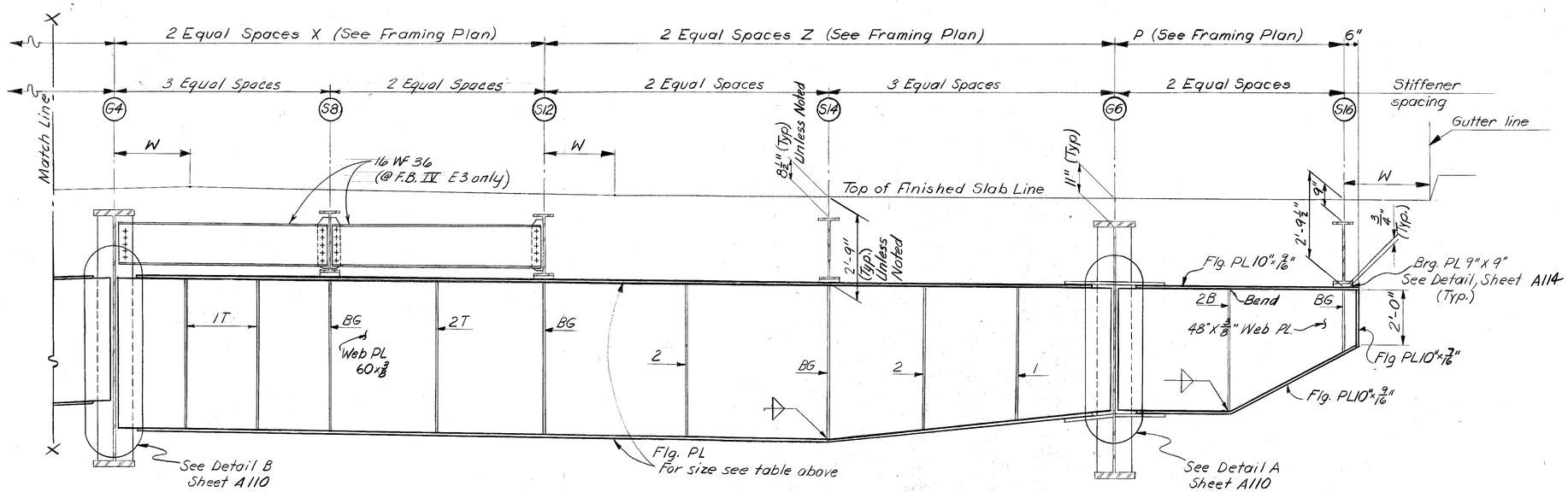

FINAL TOP OF SLAB ELEVATION					
	@ G2	@ G4	@ Break	@ Break	@ G6
FB IV E3	474.111	474.932	475.005	474.940	474.800
E4	473.807	474.707	474.787	474.669	474.447
E6	473.289	474.350	474.445	474.203	473.908
E7	473.078	474.223	474.325	474.128	473.697
E8	472.905	474.133	474.243	474.066	473.487

ELEVATION TYPE 1 FLOORBEAMS

For Location See Framing Plan

Notes:
For Stiffener Details, see Sheet A106
For other notes see Sheet A105

FLOORBEAMS
STRUCTURAL STEEL

SHEET A119

COMMONWEALTH OF KENTUCKY
DEPARTMENT OF HIGHWAYS
FRANKFORT
COUNTY OF
JEFFERSON
I64-13TH ST. TO 7TH ST.
LOUISVILLE — LEXINGTON ROAD
SP 56-273-11L

STATION 208+08 **P. E. PROJECT NO.** I 64-2 (35) 3

CONSTRUCTION PROJECT NO.	MAINTENANCE PROJECT NO.	DRAWING NO.
		18572

LETTING DATE

DESIGNED BY
DETAILED BY J.M.B.
TRACED BY
CHECKED BY
CHECKED BY
CHECKED BY
DATE
DATE 1-71
DATE
DATE
DATE
DATE
REVISED
REVISED
REVISED

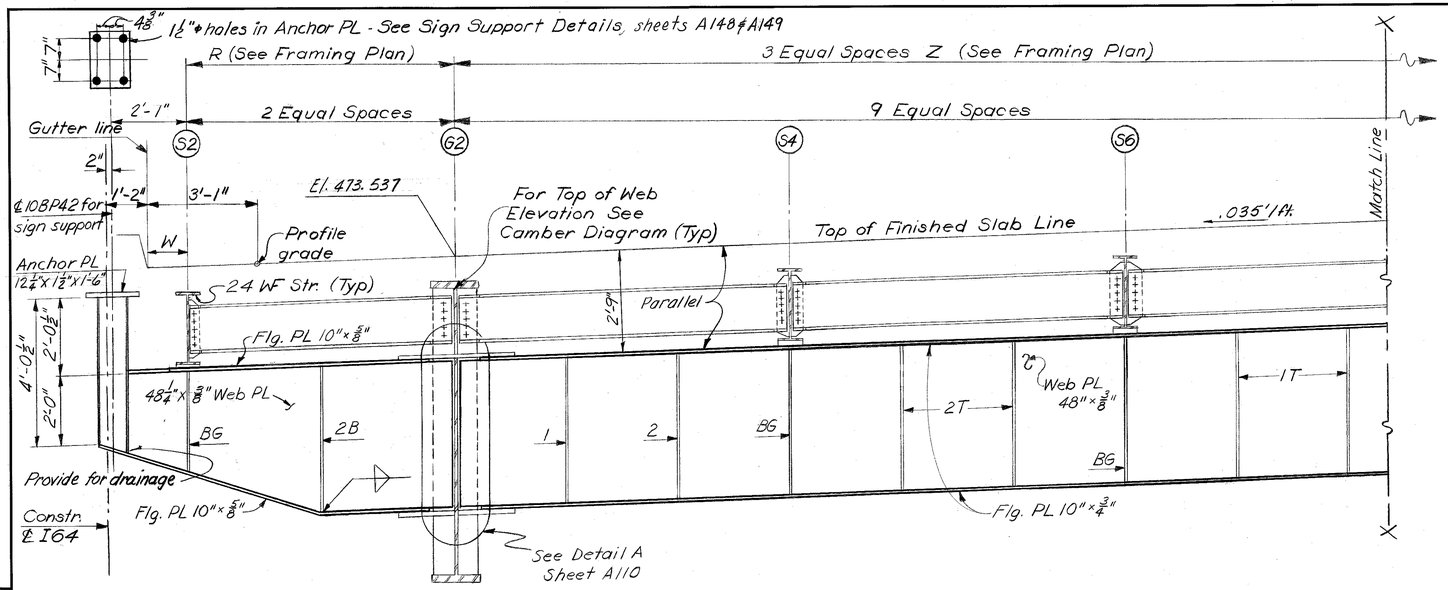

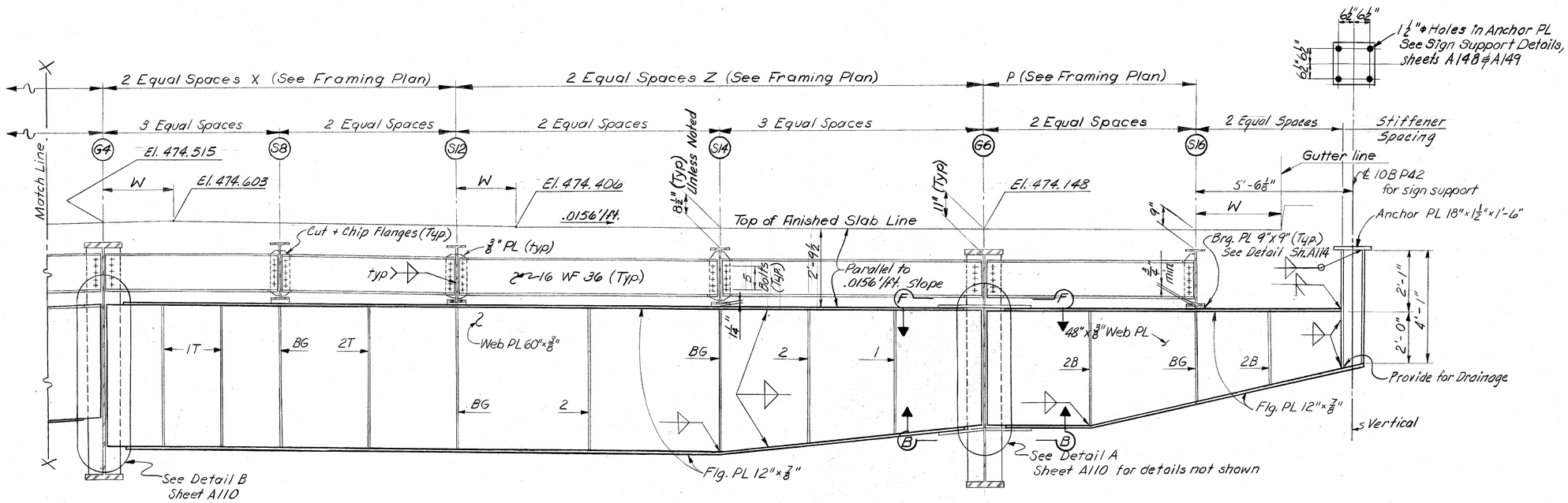

ELEVATION TYPE 1' FLOORBEAM

For Location See Framing Plan
(FB IV E5 - Pier 37 E8)

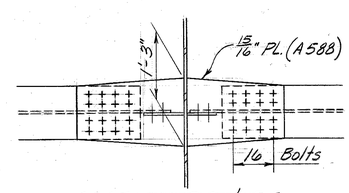

SECTION BB & FF

Notes:
Elevations shown are Final Top of Slab.
For Stiffener Details see Sheet A106
For other notes see Sheet A105

FLOORBEAMS
STRUCTURAL STEEL

SHEET A120

COMMONWEALTH OF KENTUCKY
DEPARTMENT OF HIGHWAYS
FRANKFORT
COUNTY OF
JEFFERSON
I64-13TH ST. TO 7TH ST.
LOUISVILLE—LEXINGTON ROAD
SP 56-273-11L
STATION 208+08
P.E. PROJECT NO. I 64-2 (35) 3

CONSTRUCTION PROJECT NO.	MAINTENANCE PROJECT NO.	DRAWING NO.
		18572

LETTING DATE

DATE DATE DATE

REVISED REVISED REVISED

DATE 1-71 DATE DATE

DESIGNED BY CHECKED BY
DETAILED BY J.M.B. CHECKED BY
TRACED BY CHECKED BY

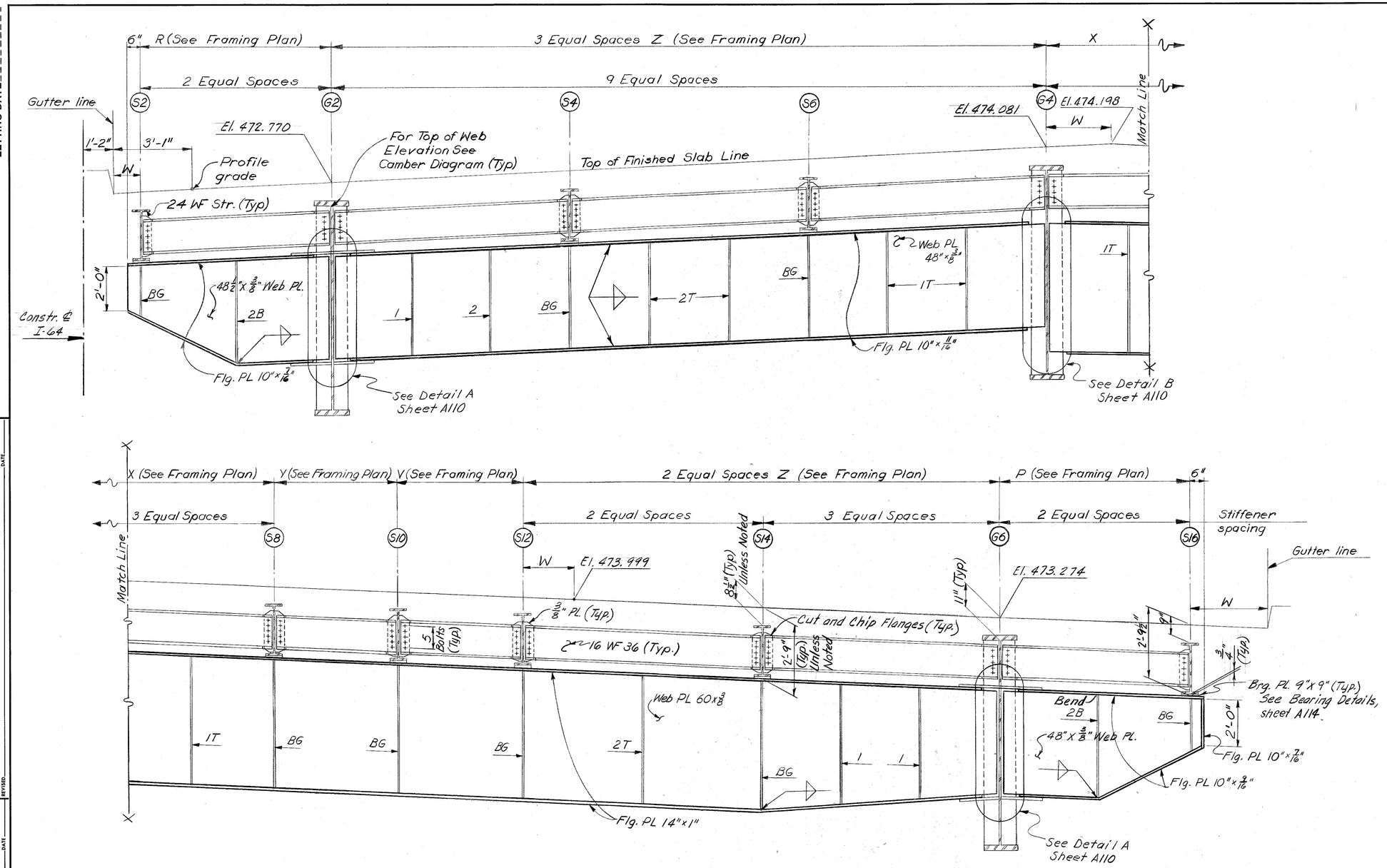

ELEVATION TYPE m' FLOORBEAM

For Location See Framing Plan
(FB IV E9 - Pier 38 E B)

Notes:
Elevations shown are Final Top of Slab.
For Stiffener Details see Sheet A106
For other notes see Sheet A105

FLOORBEAMS
STRUCTURAL STEEL

SHEET 121

COMMONWEALTH OF KENTUCKY
DEPARTMENT OF HIGHWAYS
FRANKFORT
COUNTY OF
JEFFERSON
I 64-13TH ST. TO 7TH ST.
LOUISVILLE – LEXINGTON ROAD
SP 56-273-11L

STATION 208+08	P. E. PROJECT NO. I 64-2(35)3	
CONSTRUCTION PROJECT NO.	MAINTENANCE PROJECT NO.	DRAWING NO. 18572

LETTING DATE

DESIGNED BY RBS CHECKED BY MDC DATE 1-71 REVISED
DETAILED BY LL & RDB CHECKED BY Blind DATE REVISED
TRACED BY CHECKED BY DATE REVISED

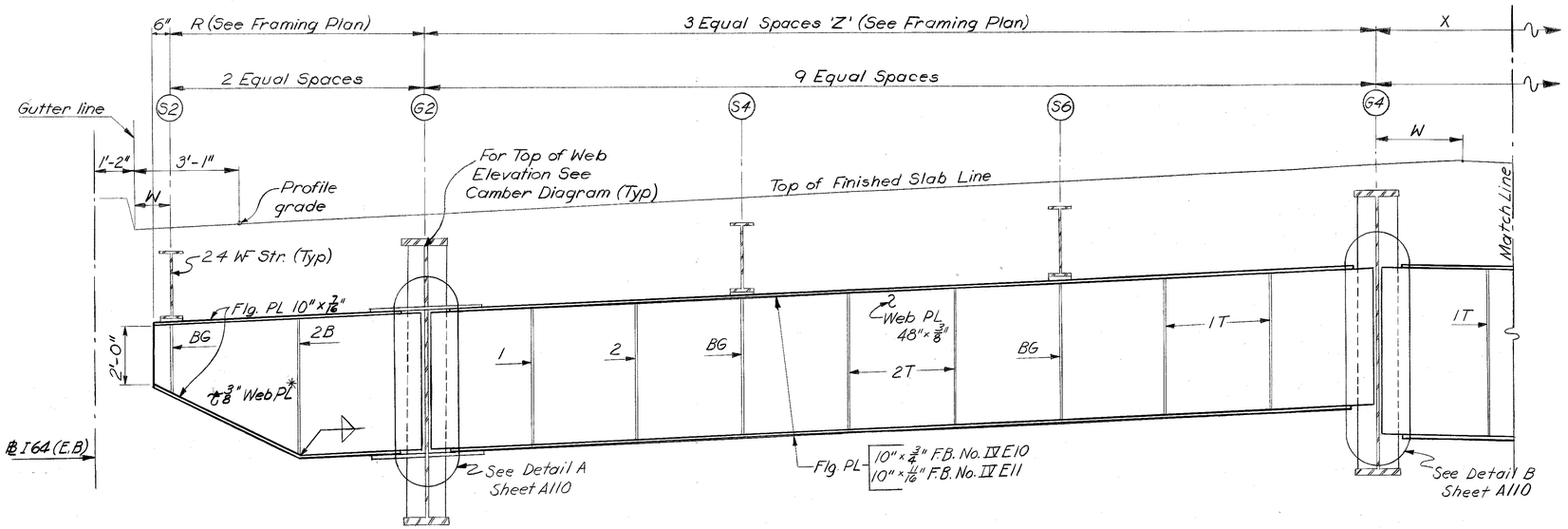

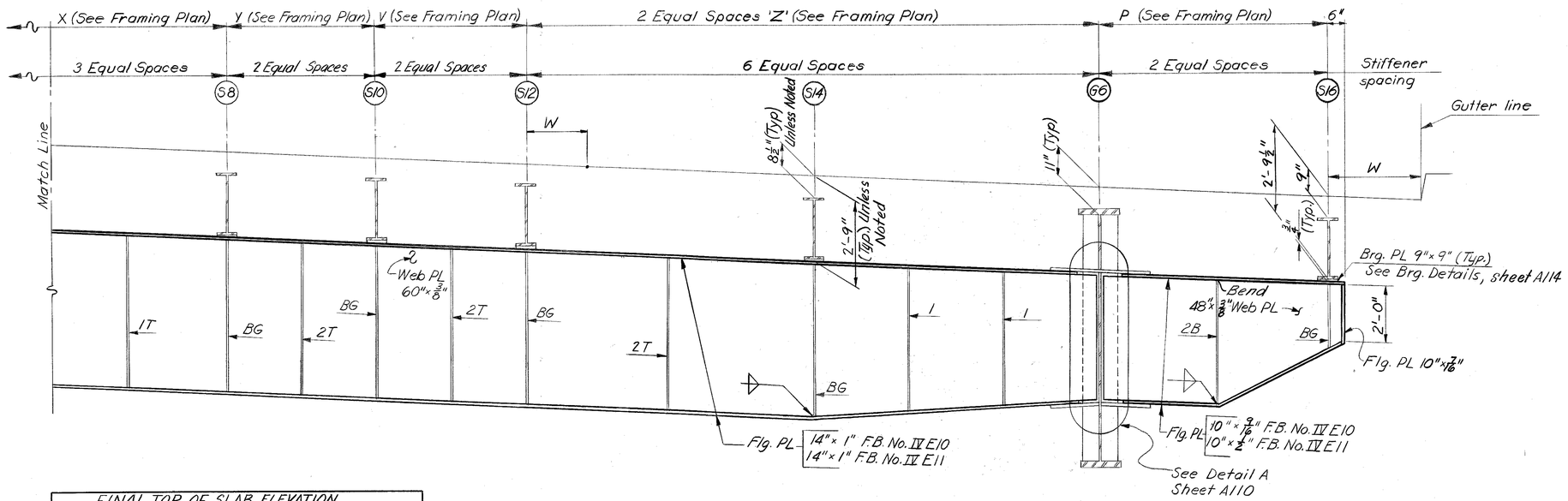

FINAL TOP OF SLAB ELEVATION					
	G2	G4	@ Break	@ Break	G6
FB IV E10	472.684	474.066	474.189	473.905	473.070
E11	472.620	474.020	474.141	473.819	472.866

ELEVATION TYPE m FLOORBEAMS

For Location See Framing Plan

Notes:

* For Web depth See Detail A Sheet A110
For Stiffener Details See Sheet A106
For other notes See Sheet A105

FLOORBEAMS
STRUCTURAL STEEL

SHEET A122

COMMONWEALTH OF KENTUCKY
DEPARTMENT OF HIGHWAYS
FRANKFORT
COUNTY OF
JEFFERSON

I 64-13TH ST. TO 7TH ST.
LOUISVILLE—LEXINGTON ROAD

STATION 208+08 | P. E. PROJECT NO. I 64-2 (35) 3 | SP 56-273-11L

CONSTRUCTION PROJECT NO.	MAINTENANCE PROJECT NO.	DRAWING NO.
		18572

LETTING DATE

DESIGNED BY TRJS | CHECKED BY MDC | DATE 8-70 | REVISED
DETAILED BY LLJ/MB | CHECKED BY BLC | DATE 1-71 | REVISED
TRACED BY | CHECKED BY | DATE | REVISED

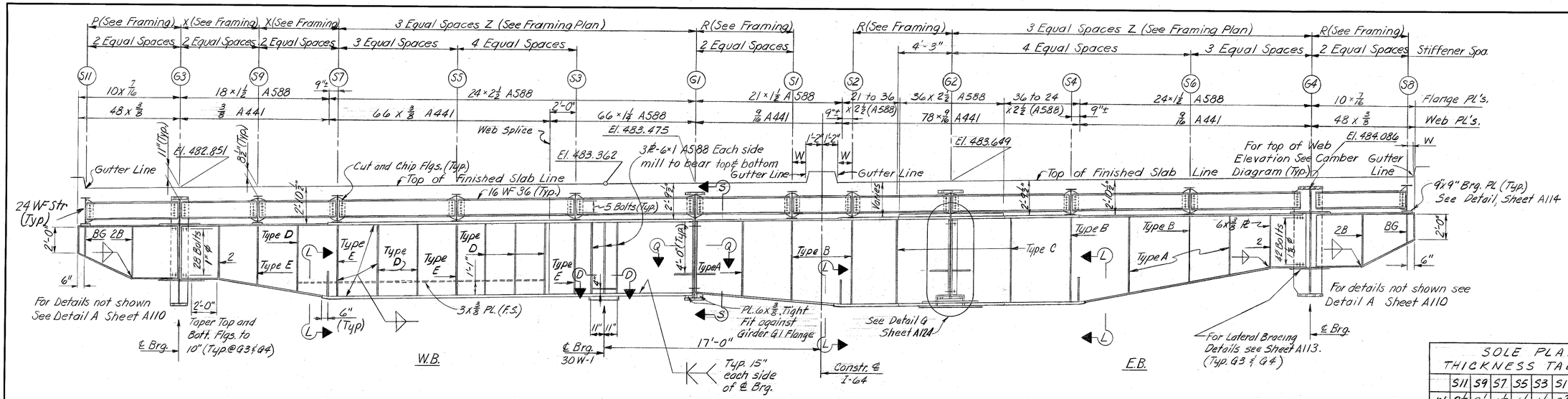

ELEVATION TYPE r' FLOORBEAM
For Location See Framing Plan
(F B II 10 - Pier 30)

SOLE PLATE THICKNESS TABLE (IN.)										
	S11	S9	S7	S5	S3	S1	S2	S4	S6	S8
r'	2 1/4	2 1/4	1 1/4	1 1/4	1 1/4	2 7/8	5/8	1 1/4	2 1/4	2 1/4
s'	3 1/4	3 1/4	3 1/4	2 5/16	2 5/16	2 5/16	3/4	3/4	3/4	3/4

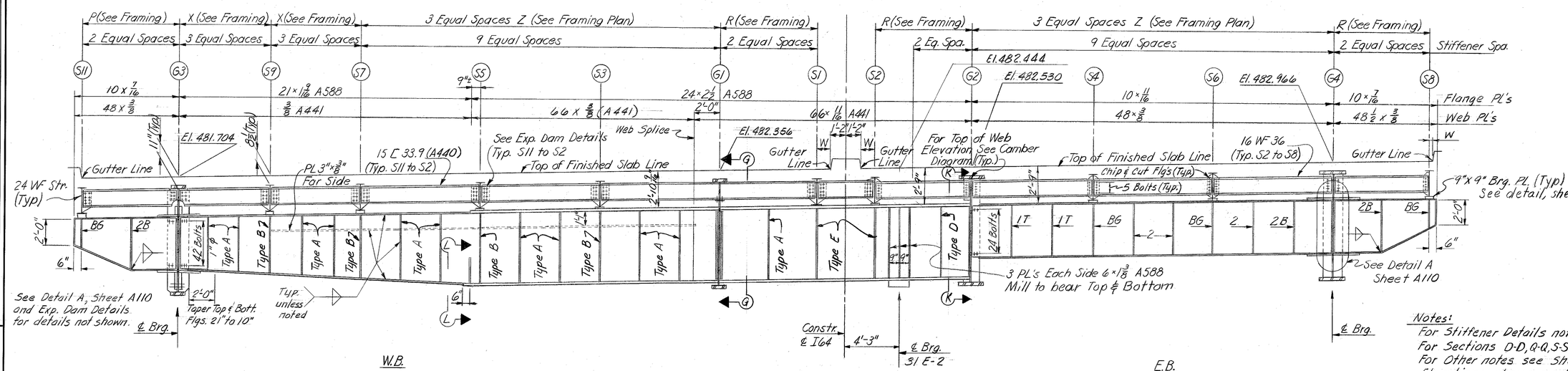

Notes:
For Stiffener Details not shown see Sheet A106
For Sections D-D, Q-Q, S-S, G-G, K-K see Sheet A124
For Other notes see Sheet A105
Elevations shown are Final Top of Slab Elevations

ELEVATION TYPE s' FLOORBEAMS
For Location See Framing Plan
(F B II 14 - Pier 31)

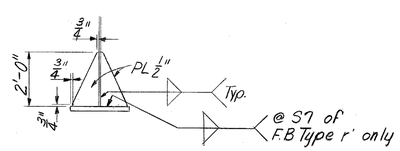

SECTION L-L

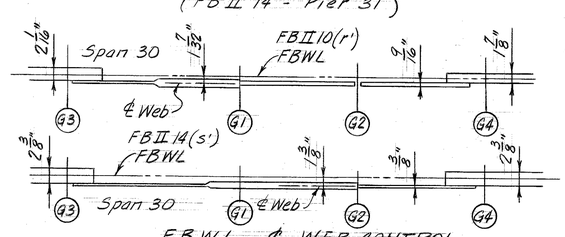

FBWL - ℄ WEB CONTROL

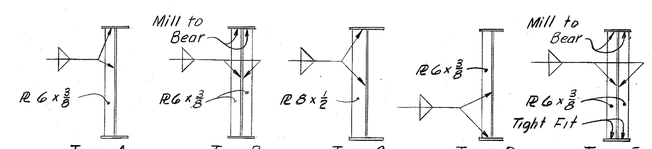

STIFFENER DETAILS FOR FLOORBEAMS TYPE r' & s'

FLOORBEAMS
STRUCTURAL STEEL

SHEET A123

COMMONWEALTH OF KENTUCKY
DEPARTMENT OF HIGHWAYS
FRANKFORT
COUNTY OF
JEFFERSON
I 64-13TH ST. TO 7TH ST.
LOUISVILLE—LEXINGTON ROAD

STATION 208+08 | P. E. PROJECT NO. I 64-2 (35) 3 | SP 56-273-11L
CONSTRUCTION PROJECT NO. | MAINTENANCE PROJECT NO. | DRAWING NO. 18572

LETTING DATE

DESIGNED BY | CHECKED BY | DATE | REVISED | DATE
DETAILED BY JMB | CHECKED BY Blue | DATE 2-71 | REVISED | DATE
TRACED BY | CHECKED BY | DATE | REVISED | DATE

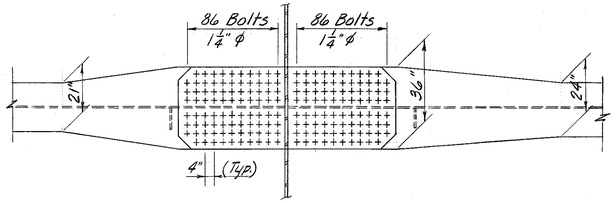

SECTION T-T

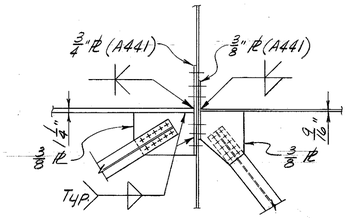

SECTION Q-Q

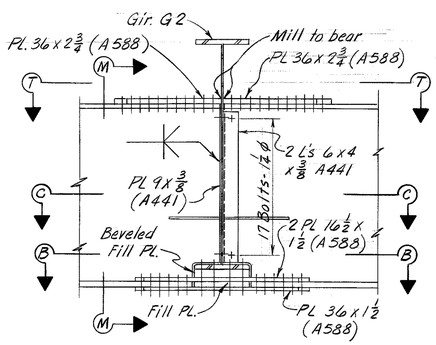

DETAIL G

(16 WF 36 Diaphragm omitted for clarity)

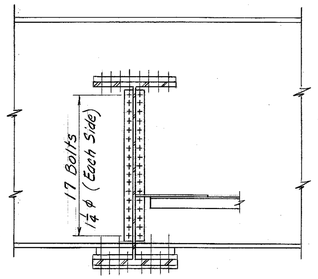

SECTION M-M

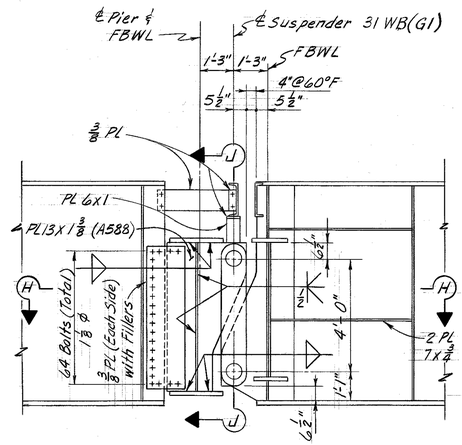

For Details not shown see Suspender Details

SECTION G-G

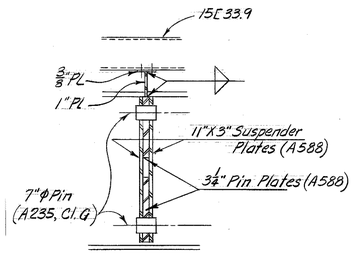

SECTION J-J

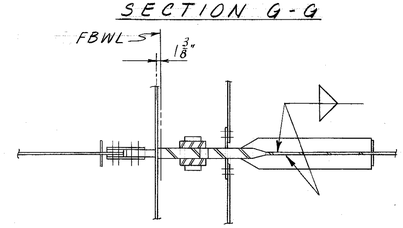

SECTION H-H

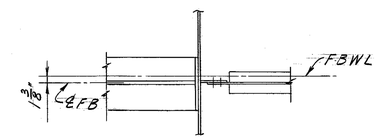

SECTION M-M

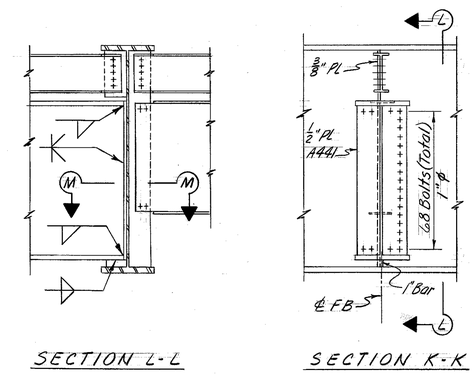

SECTION L-L

SECTION K-K

FLOORBEAM s' DETAILS

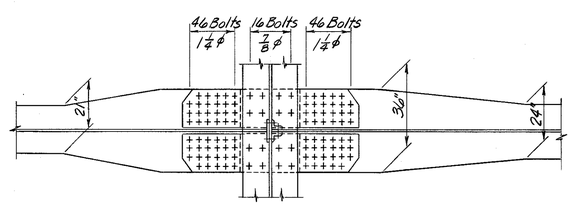

SECTION B-B

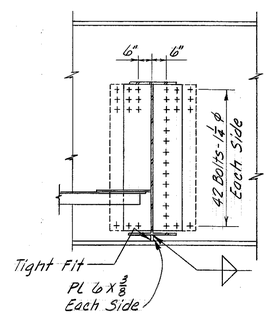

SECTION S-S

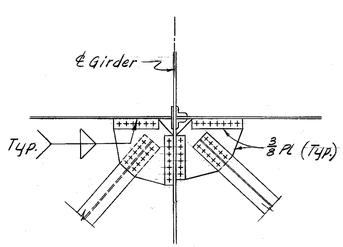

SECTION C-C

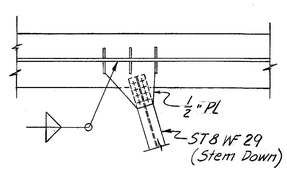

SECTION D-D

FLOORBEAM r' DETAILS

FLOORBEAMS
STRUCTURAL STEEL

SHEET A124

COMMONWEALTH OF KENTUCKY
DEPARTMENT OF HIGHWAYS
FRANKFORT
COUNTY OF
JEFFERSON
I 64-13TH ST. TO 7TH ST.
LOUISVILLE — LEXINGTON
ROAD SP 56-273-IIL
STATION 208+08 **P. E. PROJECT NO.** I 64-2 (35) 3

CONSTRUCTION PROJECT NO.	MAINTENANCE PROJECT NO.	DRAWING NO.
		18572

LETTITG DATE

DESIGNED BY E.L.U.	2-70	CHECKED BY Birch	DATE 2-71
DETAILED BY E.L.U.	2-70	CHECKED BY Birch	DATE 2-71
TRACED BY E.L.U.	2-70	CHECKED BY Birch	DATE 2-71

REVISED DATE
REVISED DATE
REVISED DATE

FED. ROAD DIST.	STATE	FED. AID PROJ. NO.	FISCAL YEAR	SHEET NO.	TOTAL SHEETS
7	KY.				

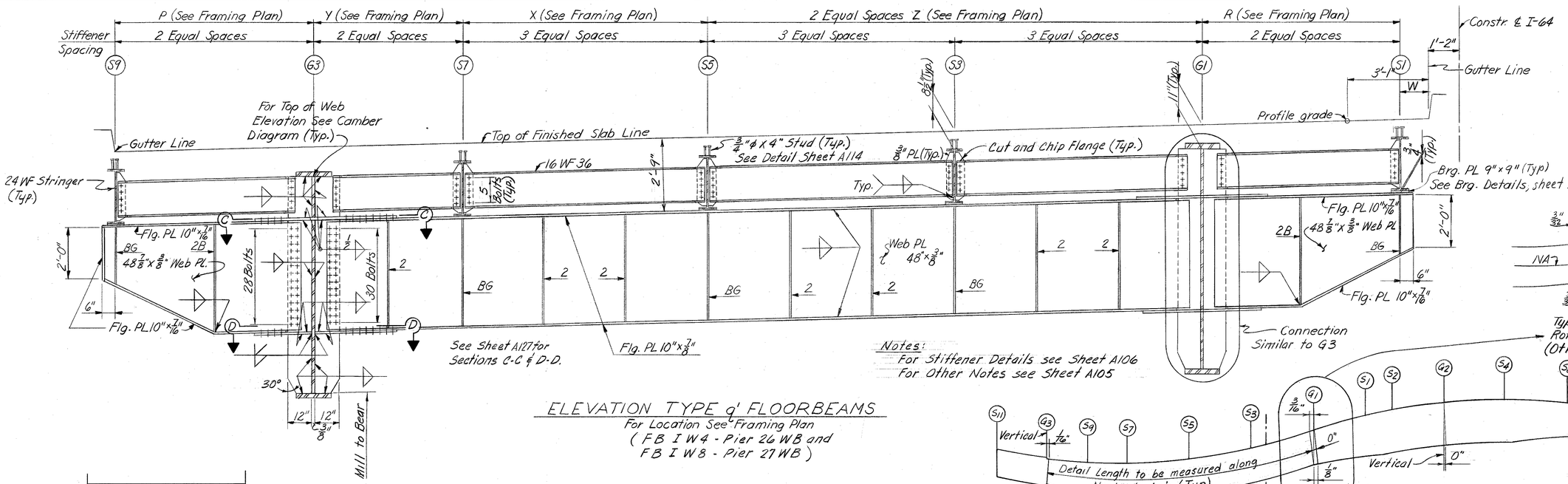

ELEVATION TYPE q' FLOORBEAMS
For Location See Framing Plan
(FB I W4 - Pier 26 WB and
FB I W8 - Pier 27 WB)

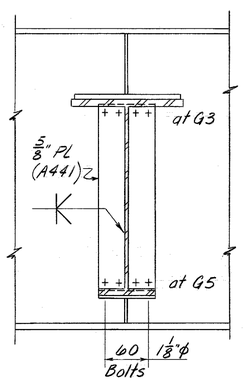

SECTION R-R

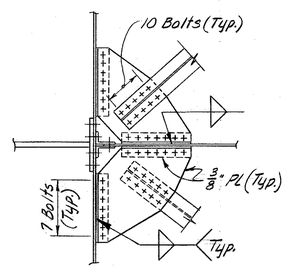

SECTION S-S

For location of Sections R-R & S-S see Sheet A128

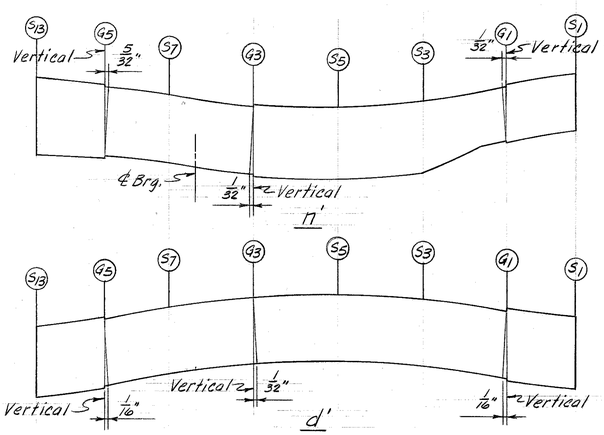

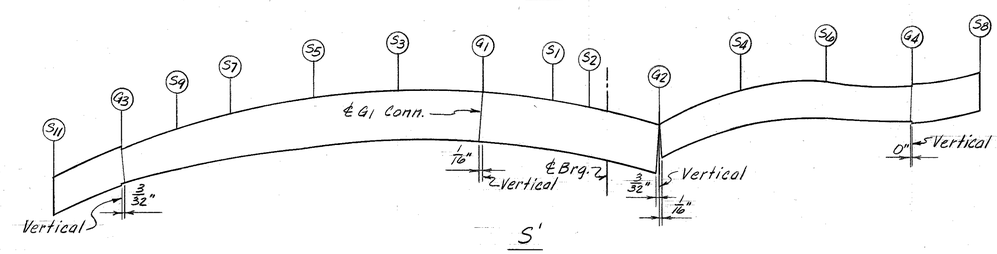

STRINGER		S11	G3(Cont.)	G3(Int.)	S9	S7	S5	S3	℄ Brg.	G1	S1	S2	℄ Brg.	G2(Med.)	G2(Int.)	S4	S6	G4(Int.)	G4(Cont.)	S8
r'	Elev. Top of Web	479.834	479.939	479.851	479.938	480.027	480.172	480.326	480.362	480.492	480.574	480.619	—	480.690	—	480.831	480.965	481.086	481.174	481.274
	Δ Total	.012	.000	.000	-.007	-.012	-.012	-.004	.000	.017	.032	.037		.041		.037	.025	.000	.000	-.017
	Δ Steel	.002	.000	.000	-.001	-.002	-.002	-.001	.000	.003	.006	.006		.006		.006	.004	.000	.000	-.003
s'	Elev. Top of Web	478.581	478.710	478.616	478.737	478.854	479.006	479.152	—	479.290	479.397	479.458	479.486	479.565	479.716	479.869	480.016	480.159	480.179	480.297
	Δ Total	-.012	.000	.000	.013	.022	.029	.029		.022	.012	.003	.000	-.007	-.007	.001	.002	.000	.000	.001
	Δ Steel	-.002	.000	.000	.002	.004	.005	.005		.004	.002	.000	.000	-.001	-.001	.000	.000	.000	.000	.000

Note:
A negative camber value indicates an upward deflection due to D.L.

STRINGER		S13	G5(Cont.)	G5(Int.)	S7	℄ Brg	G3(Lt.)	G3(Rt.)	S5	S3	G1(Int.)	G1(Cont.)	S1
r'	Elev. Top of Web	477.009	477.105	476.975	477.069	477.094	477.203	477.245	477.388	477.537	477.689	477.777	477.903
	Δ Total	.042	.021	.021	.003	.000	-.008	-.008	-.011	-.007	.000	.000	.009
	Δ Steel	.007	.004	.004	.001	.000	-.002	-.002	-.002	-.001	.000	.000	.002
d'	Elev. Top of Web	478.759	478.884	478.754	478.870	—	478.983	—	479.129	479.269	479.406	479.537	479.648
	Δ Total	-.008	.000	.000	.008		.013		.014	.008	.000	.000	-.006
	Δ Steel	-.001	.000	.000	.001		.003		.003	.002	.000	.000	-.001

FLOORBEAM CAMBER

FLOORBEAMS
STRUCTURAL STEEL

SHEET A125

COMMONWEALTH OF KENTUCKY
DEPARTMENT OF HIGHWAYS
FRANKFORT
COUNTY OF
JEFFERSON
I64-13TH ST. TO 7TH ST.
LOUISVILLE — LEXINGTON ROAD
SP 56-273-11L
STATION 208+08 **PROJECT NO.** I 64-2 (35)3

BRIDGE NUMBER	DRAWING NO.	INDEX
	18572	

DESIGNED BY — DATE
DETAILED BY JMR — CHECKED BY — DATE
TRACED BY — CHECKED BY — DATE
REVISED — DATE
REVISED — DATE

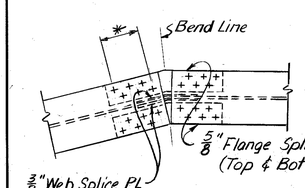

DETAIL E

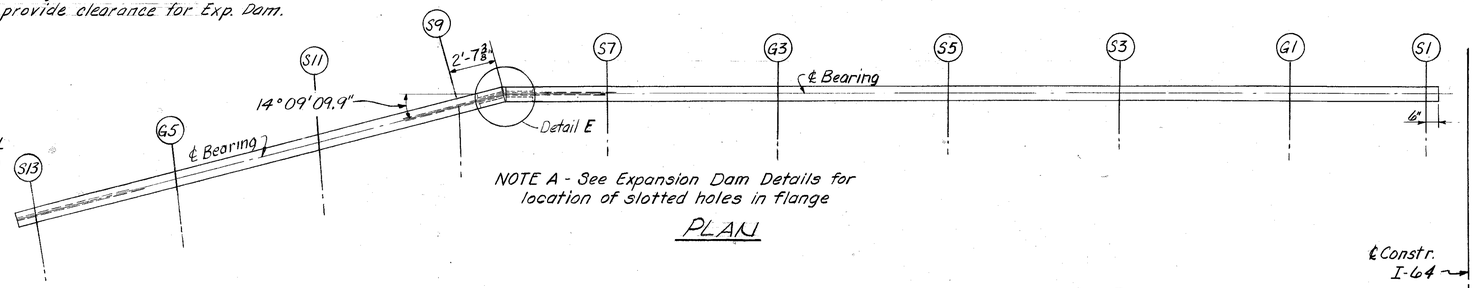

NOTE A - See Expansion Dam Details for location of slotted holes in flange

PLAN

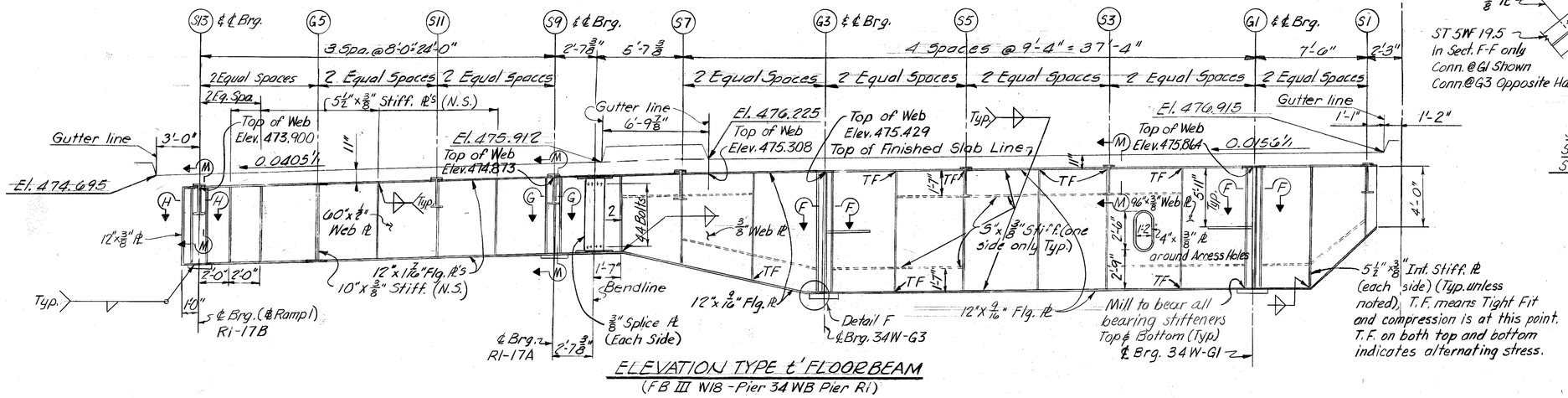

ELEVATION TYPE 'L' FLOORBEAM
(FB III W18 - Pier 34 WB Pier R1)

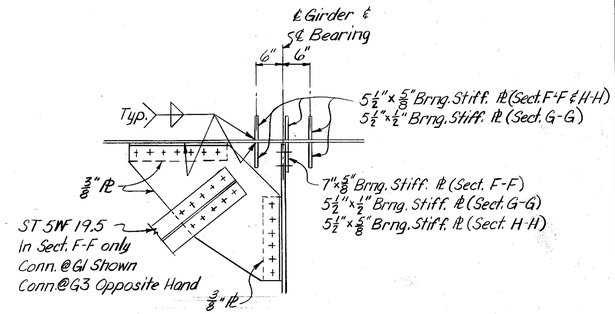

SECTION F-F
SECTION G-G SIMILAR
SECTION H-H SIMILAR

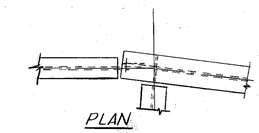

PLAN

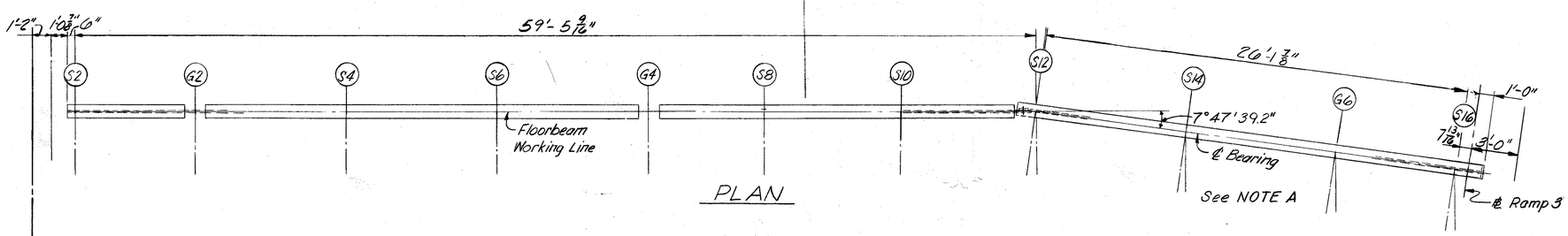

PLAN

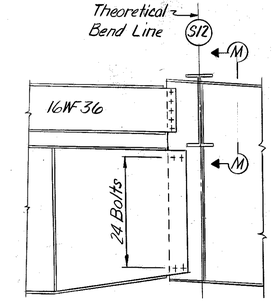

ELEVATION
DETAIL G

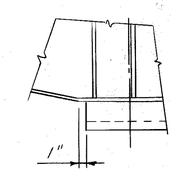

DETAIL F

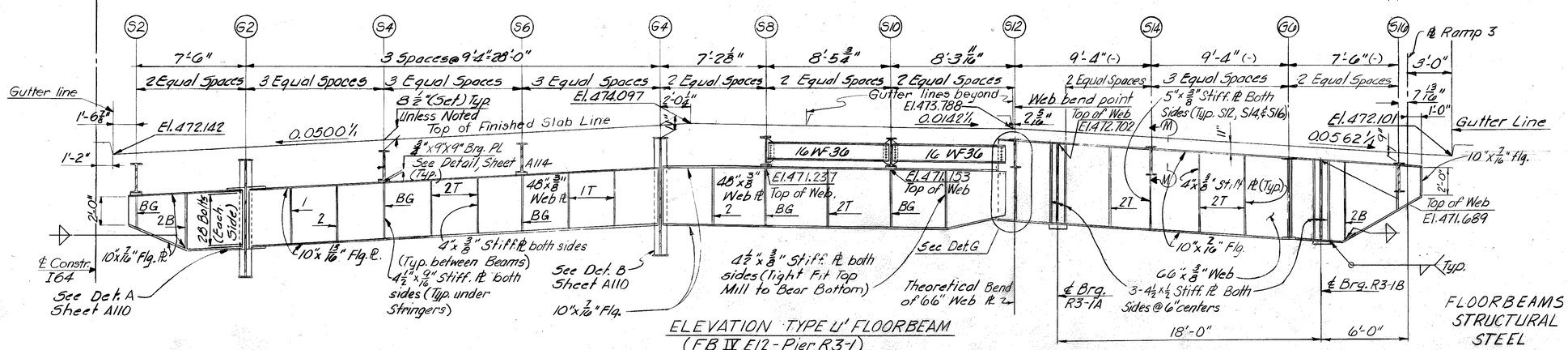

ELEVATION TYPE 'U' FLOORBEAM
(FB IV E12 - Pier R3-1)

FLOORBEAMS
STRUCTURAL
STEEL

For other notes See Sheet A105
For Sect. M-M See Sheet A128
For Stiffener Details not shown See Sheet A106
SHEET A126

COMMONWEALTH OF KENTUCKY
DEPARTMENT OF HIGHWAYS
FRANKFORT
COUNTY OF
JEFFERSON
I 64-13TH ST. TO 7TH ST.
LOUISVILLE — LEXINGTON ROAD
SP 56-273-11L
STATION 208+08
P. E. PROJECT NO. I 64-2 (35) 3

CONSTRUCTION PROJECT NO.	MAINTENANCE PROJECT NO.	DRAWING NO.
		18572

LETTING DATE

DESIGNED BY TTC DATE 2-'71
DETAILED BY P.H. McCarty CHECKED BY
TRACED BY CHECKED BY
REVISED DATE
REVISED DATE
REVISED DATE

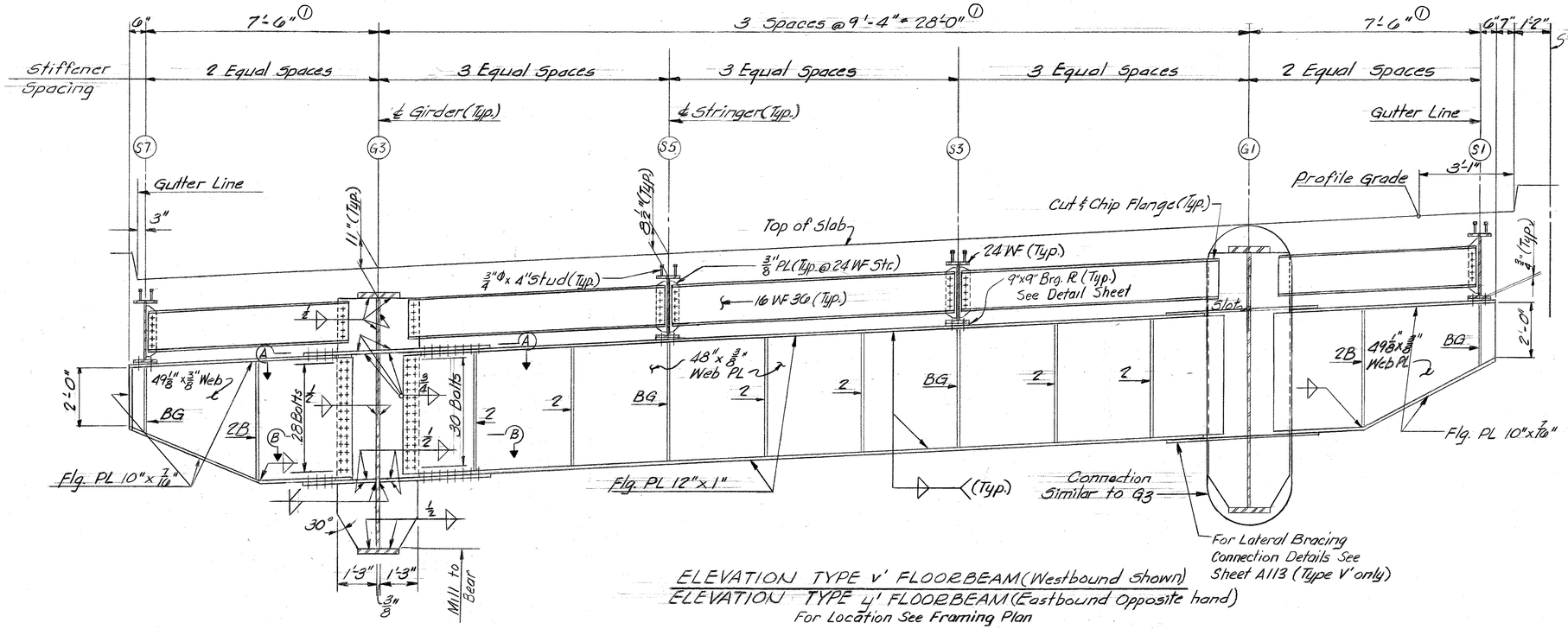

ELEVATION TYPE V' FLOORBEAM (Westbound Shown)
ELEVATION TYPE 4' FLOORBEAM (Eastbound Opposite hand)
For Location See Framing Plan

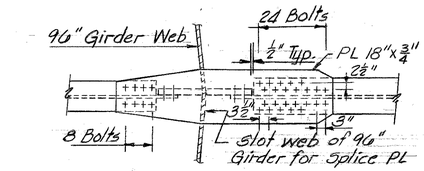

SECTION A-A
(Top FB Flange)

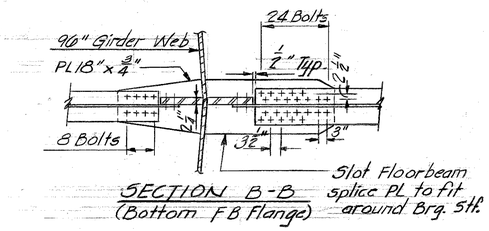

SECTION B-B
(Bottom FB Flange)

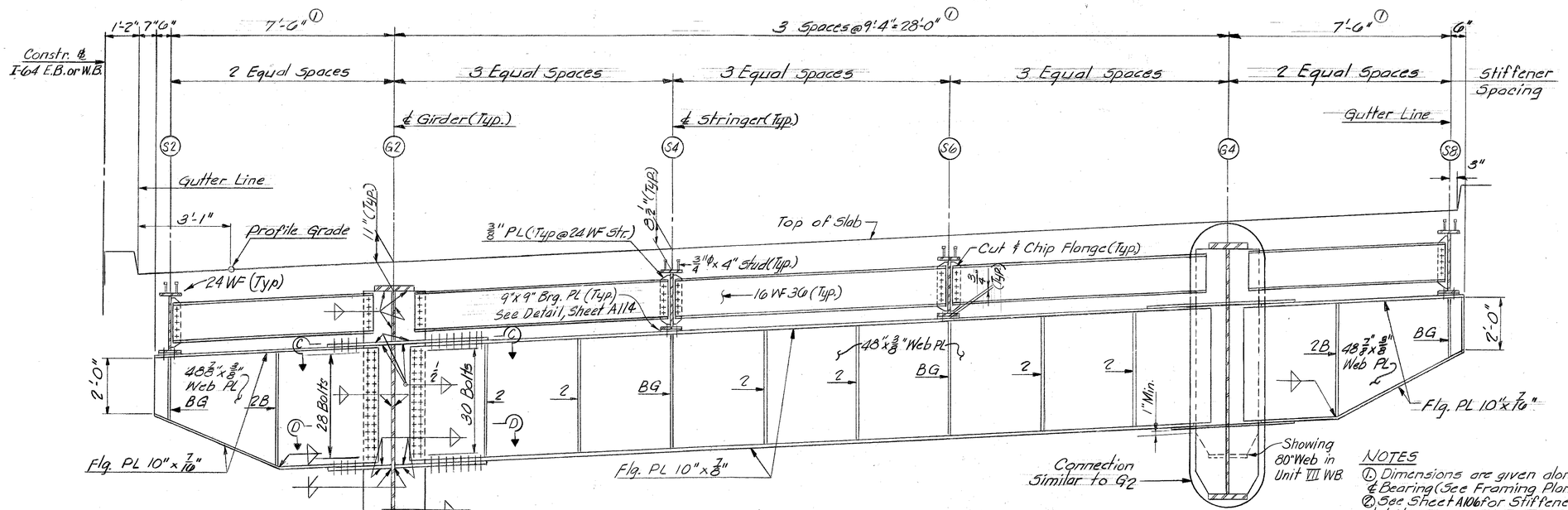

ELEVATION TYPE X' FLOORBEAM (Eastbound Shown)
ELEVATION TYPE W' FLOORBEAM (Westbound Opposite hand)
For Location See Framing Plan

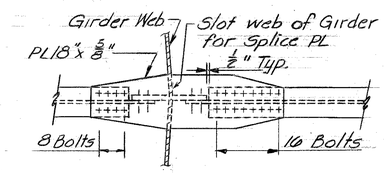

SECTION C-C
(Top FB Flange)

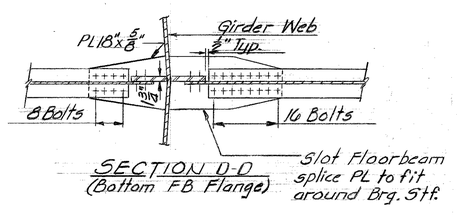

SECTION D-D
(Bottom FB Flange)

SHEET A127

NOTES
① Dimensions are given along ℄ Bearing (See Framing Plans).
② See Sheet A106 for Stiffener details.
③ For details of Studs See Sheet A114
For Other Notes see Sheet A105

FLOORBEAMS
STRUCTURAL STEEL

COMMONWEALTH OF KENTUCKY
DEPARTMENT OF HIGHWAYS
FRANKFORT
COUNTY OF
JEFFERSON
I64-13TH ST. TO 7TH ST.
LOUISVILLE – LEXINGTON ROAD
SP 56-273-11L

STATION 208+08	P.E. PROJECT NO. I 64-2 (35) 3	
CONSTRUCTION PROJECT NO.	MAINTENANCE PROJECT NO.	DRAWING NO. 18572

LETTING DATE

DESIGNED BY R.H. McCarty CHECKED BY
DETAILED BY Blank DATE 1-71 CHECKED BY
TRACED BY DATE
REVISED DATE REVISED DATE REVISED DATE

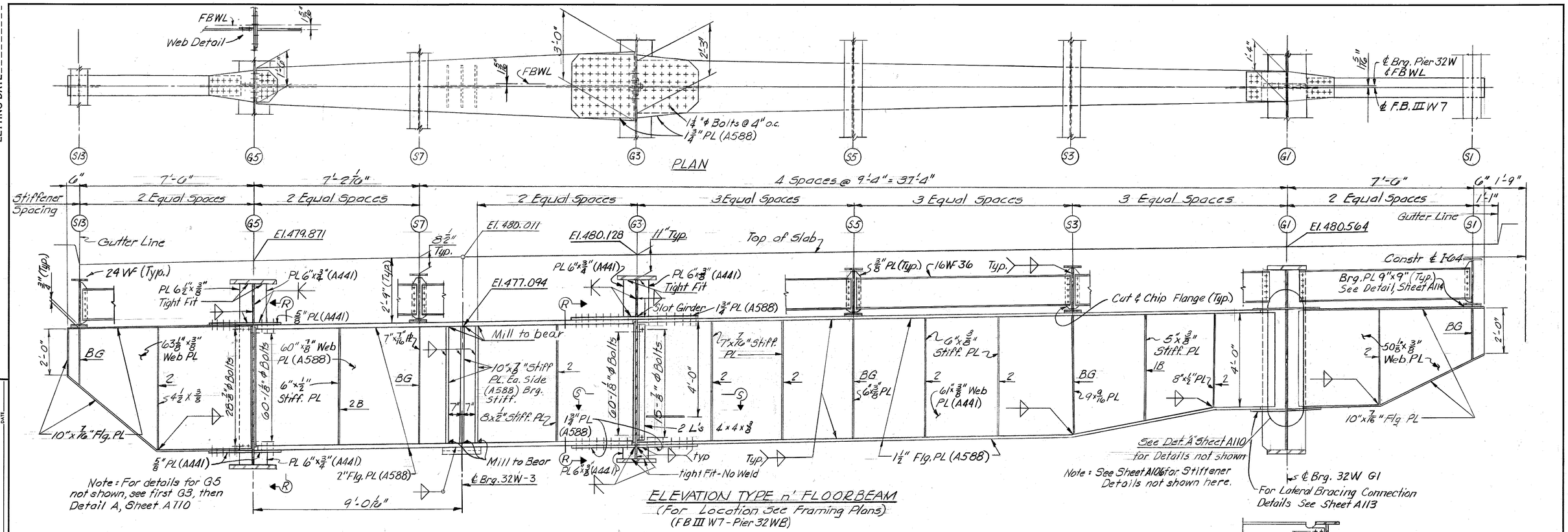

NOTE

See Sheet A125 for Section R-R & S-S
For other notes See Sheet A105

SHEET A128

FLOORBEAMS
STRUCTURAL STEEL

COMMONWEALTH OF KENTUCKY
DEPARTMENT OF HIGHWAYS
FRANKFORT
COUNTY OF
JEFFERSON

I 64—13TH ST. TO 7TH ST.
LOUISVILLE — LEXINGTON ROAD

STATION 208+08 | P. E. PROJECT NO. I 64-2 (35) 3 | SP 56-273-11L

CONSTRUCTION PROJECT NO.	MAINTENANCE PROJECT NO.	DRAWING NO.
		18572

LETTING DATE

DESIGNED BY R.H. McCarty CHECKED BY
DETAILED BY SRW - Black DATE 2-71 CHECKED BY
TRACED BY CHECKED BY

REVISED DATE
REVISED DATE
REVISED DATE

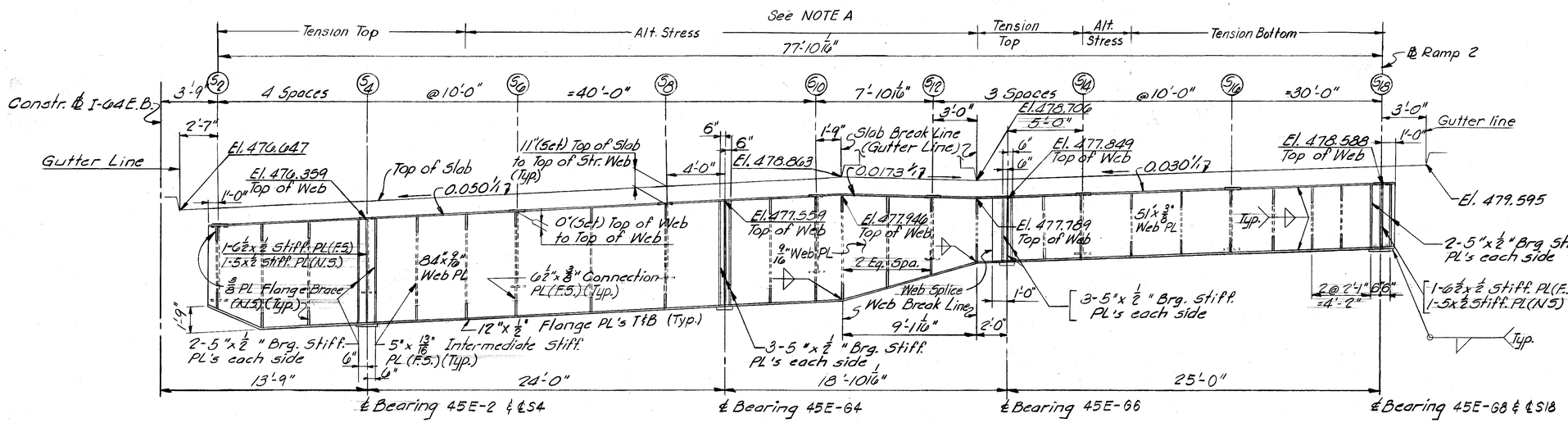

PIER GIRDER 45 E.B.

PIER GIRDER NOTES

1. For Structural Steel Notes See Sheet A3
2. Intermediate Stiffeners are equally spaced between Stringers or between Stringers and ℄'s of bearing unless noted.
3. All intermediate and bearing stiffeners are vertical.
4. For details of intermediate and bearing stiffeners see Sheet A133
5. For details of Stringer Splices see Sheet A139
6. For Stringer details See Sheets A134 thru A141
7. For Weld details See Sheet A139
8. For Sole Plate dimensions and Bearing Details See Sheet A147
9. For camber ordinates see Sheet A142 thru A144
10. F.S. denotes Far Side N.S. denotes Near Side
11. All Elevations, except as noted, are Final Top of Slab (Deflected Elevations)

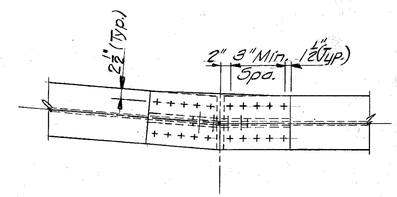

PLAN

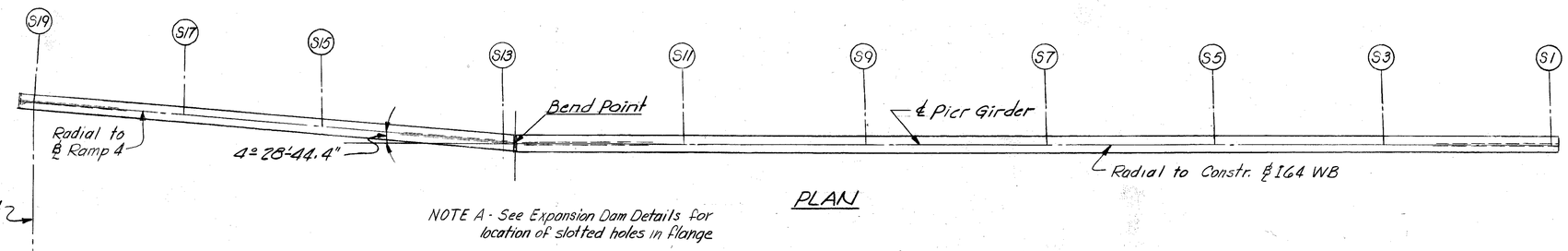

PLAN

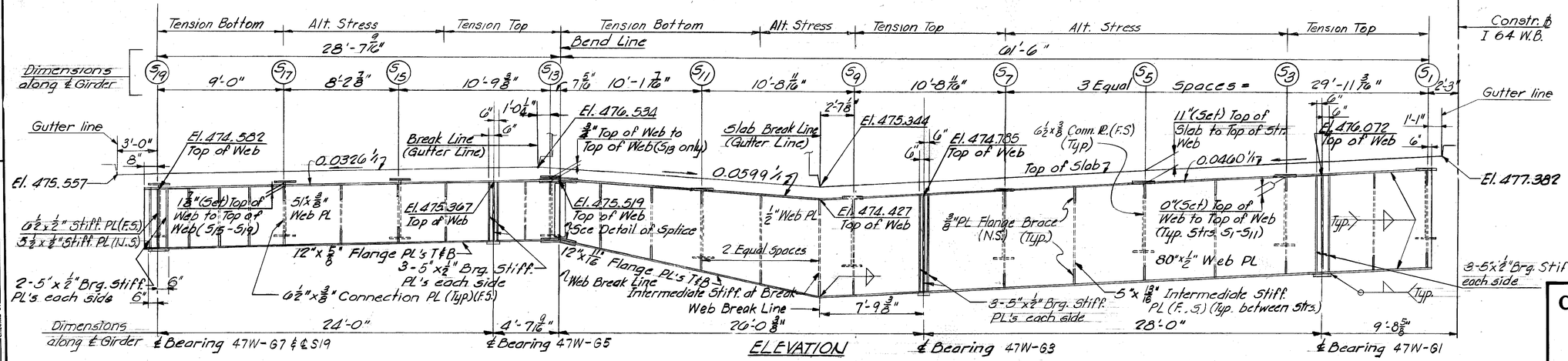

ELEVATION

PIER GIRDER 47 W.B.

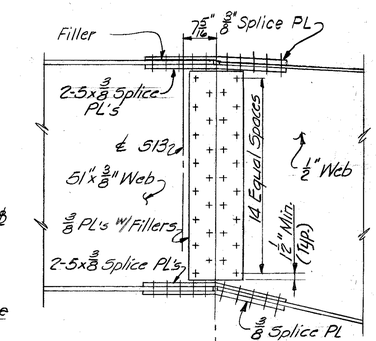

ELEVATION

SPLICE DETAIL P.G. 47 W.B.

SHEET A129

All Steel this Sheet ASTM A36 unless noted.

PIER GIRDERS
STRUCTURAL STEEL

COMMONWEALTH OF KENTUCKY
DEPARTMENT OF HIGHWAYS
FRANKFORT
COUNTY OF
JEFFERSON

164-13TH ST. TO 7TH ST.
LOUISVILLE—LEXINGTON ROAD

STATION 208+08 | P.E. PROJECT NO. I 64-2 (35)3 | SP 56-273-11L

CONSTRUCTION PROJECT NO. | MAINTENANCE PROJECT NO. | DRAWING NO. 18572

LETTING DATE

DESIGNED BY EB CHECKED BY PME DATE 9-70 REVISED
DETAILED BY R.H. McCarty CHECKED BY Black DATE 11-70 REVISED
TRACED BY DATE REVISED

FED. ROAD DIST.	STATE	FED. AID PRO. NO.	FISCAL YEAR	SHEET NO.	TOTAL SHEETS
7	KY.				

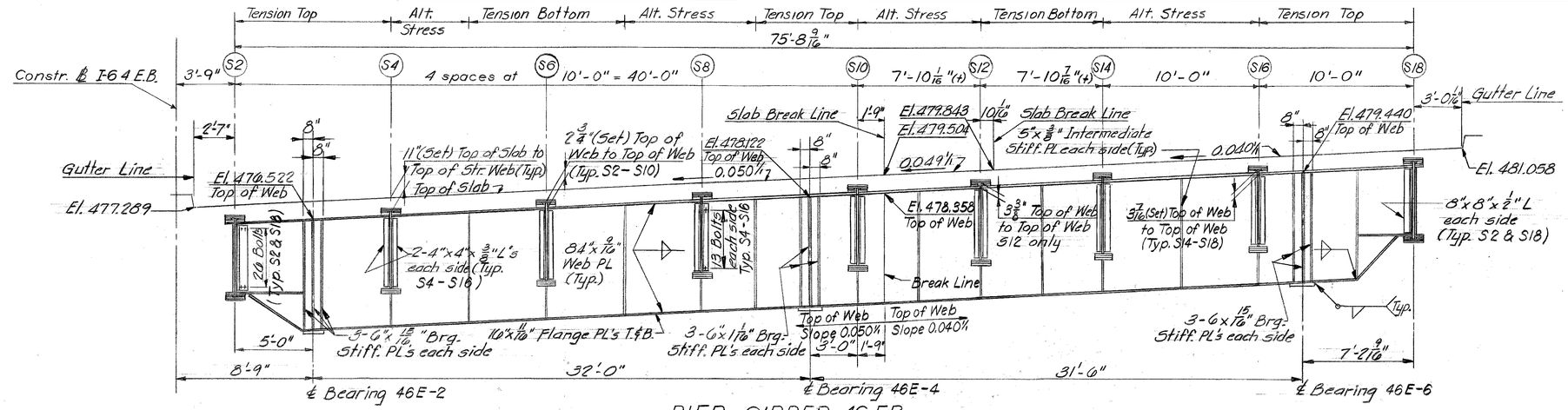

PIER GIRDER 46 EB

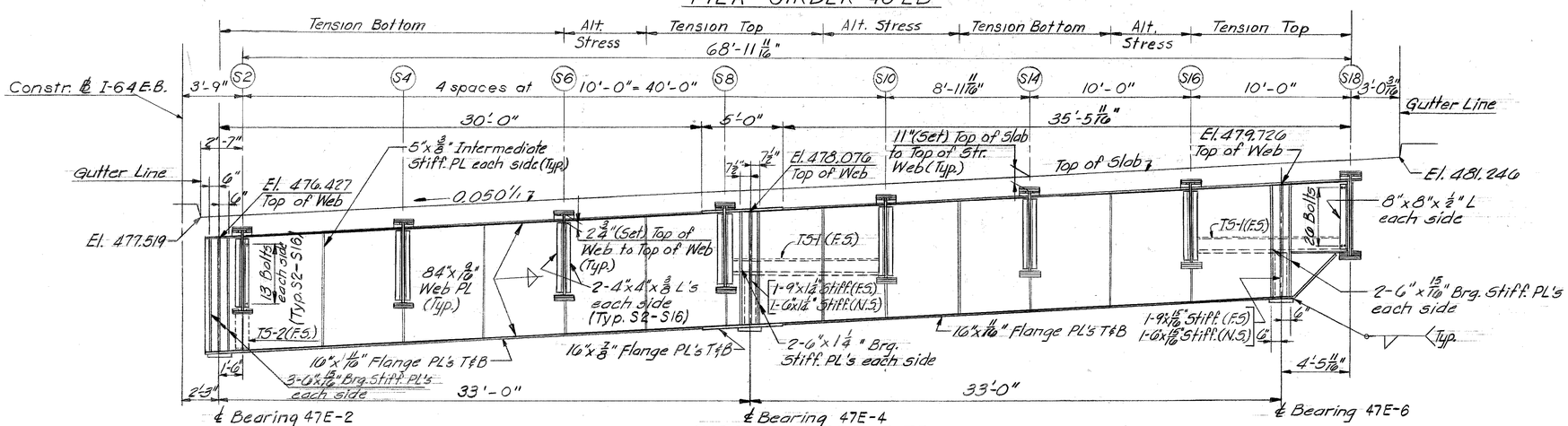

PIER GIRDER 47 EB

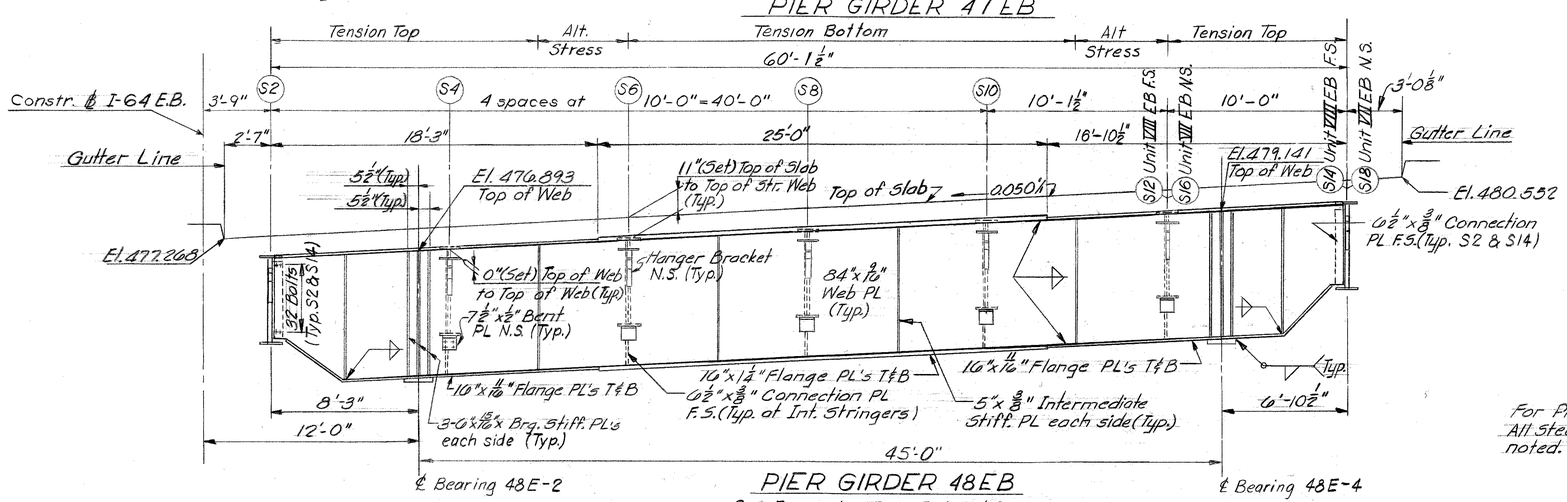

PIER GIRDER 48EB

See Expansion Dam Details for location of slotted holes in flange

For Pier Girder Notes See Sheet A129
All Steel this Sheet ASTM-A30 unless noted.

PIER GIRDERS
STRUCTURAL STEEL

SHEET A130

DESIGNED BY EB	CHECKED BY	DATE	REVISED
DETAILED BY	CHECKED BY	DATE	REVISED
TRACED BY	CHECKED BY	DATE	REVISED

PMC 9-10 BLW 10-10

COMMONWEALTH OF KENTUCKY
DEPARTMENT OF HIGHWAYS
FRANKFORT
COUNTY OF
JEFFERSON
I64-13TH ST. TO 7TH ST.
LOUISVILLE – LEXINGTON
ROAD SP 56-273-11L
STATION 208+08 **PROJECT NO.** I64-2(35)3

BRIDGE NUMBER	DRAWING NO.	INDEX
	18572	

FED. ROAD DIST.	STATE	FED. AID PROJ. NO.	FISCAL YEAR	SHEET NO.	TOTAL SHEETS
7	KY.				

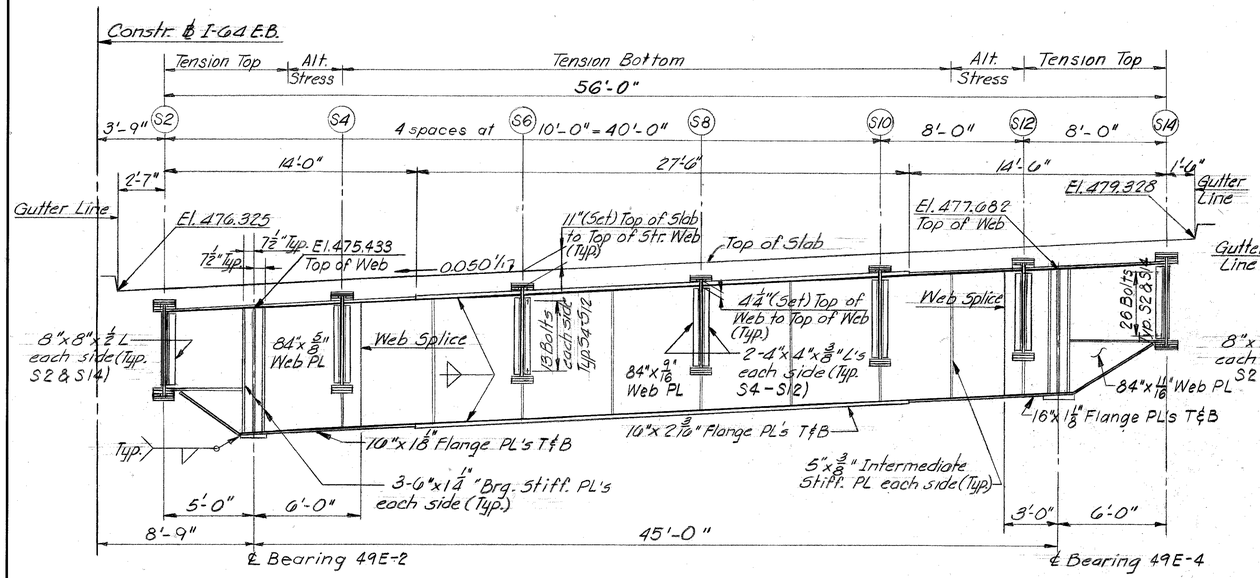

PIER GIRDER 49 EB

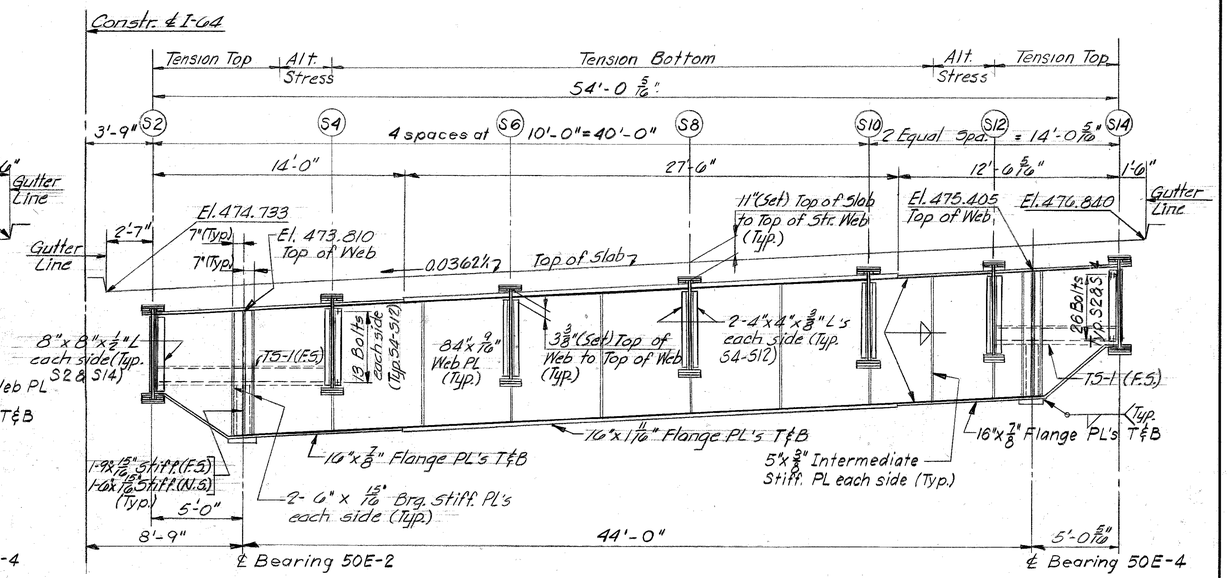

PIER GIRDER 50 EB

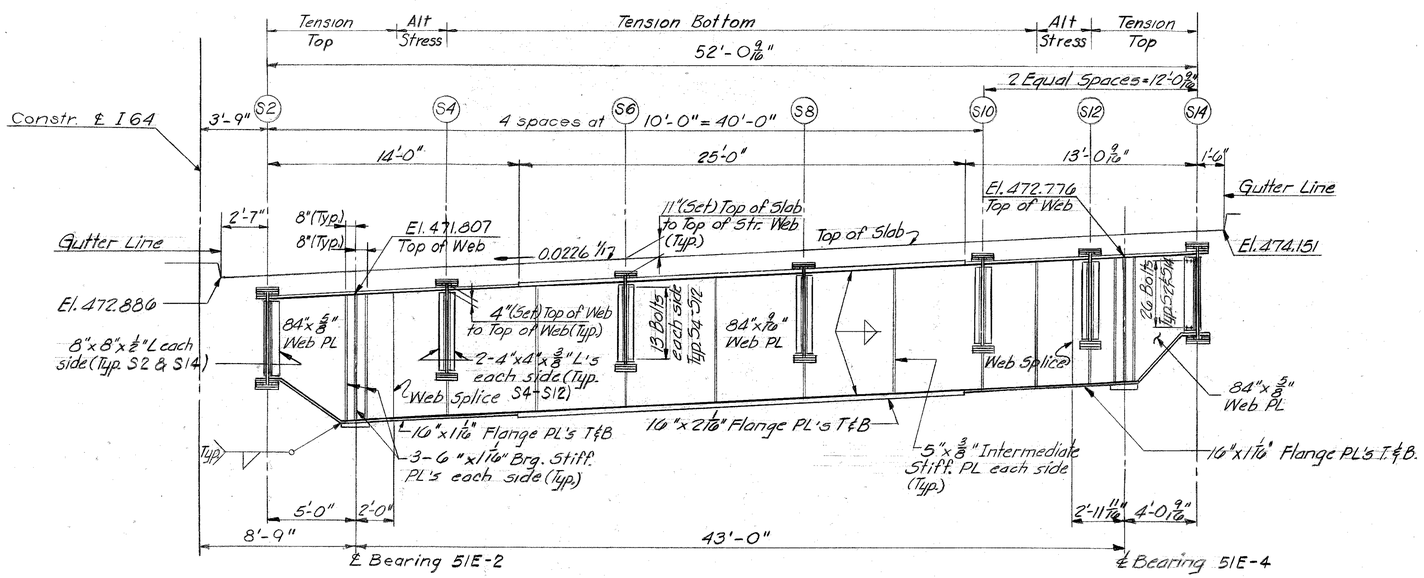

PIER GIRDER 51 EB

For Pier Girder Notes see Sheet A129
All Steel this Sheet ASTM A36 unless noted.

PIER GIRDERS
STRUCTURAL STEEL

SHEET A131

COMMONWEALTH OF KENTUCKY
DEPARTMENT OF HIGHWAYS
FRANKFORT
COUNTY OF
JEFFERSON

I64-13TH ST. TO 7TH ST.
LOUISVILLE – LEXINGTON
ROAD

STATION 208+08 **PROJECT NO.** I 64-2(35)3

BRIDGE NUMBER | DRAWING NO. 18572 | INDEX

DESIGNED BY EB CHECKED BY PME DATE 9-70 REVISED DATE
DETAILED BY R. H. McCarty CHECKED BY B. Ivell DATE 11-70 REVISED DATE
TRACED BY CHECKED BY DATE REVISED DATE

FED. ROAD DIST.	STATE	FED. AID PRO. NO.	FISCAL YEAR	SHEET NO.	TOTAL SHEETS
7	KY.				

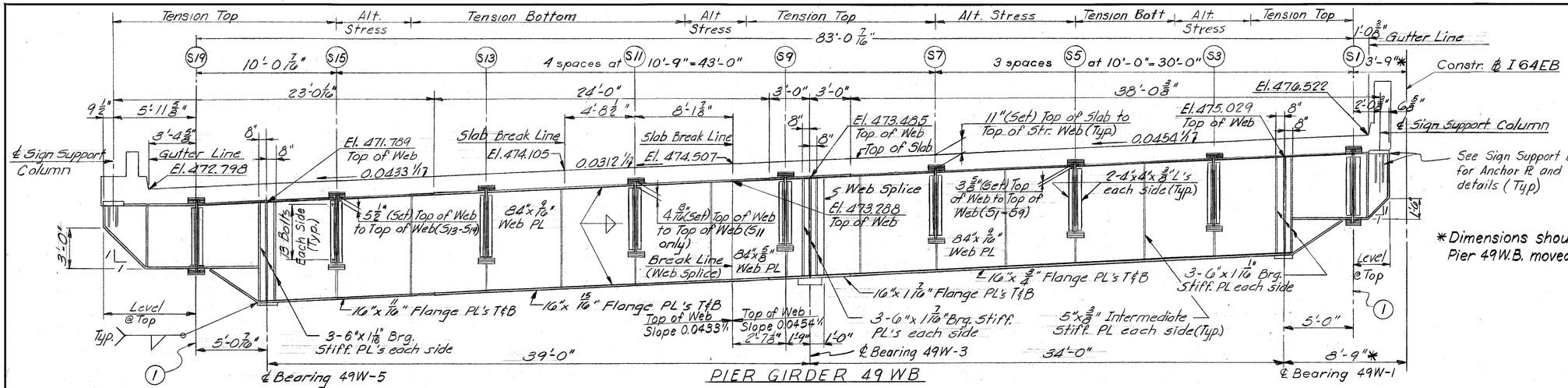

PIER GIRDER 49 WB

* Dimensions should be increased by 1.549'. Pier 49W.B. moved north. See Sht. A31.

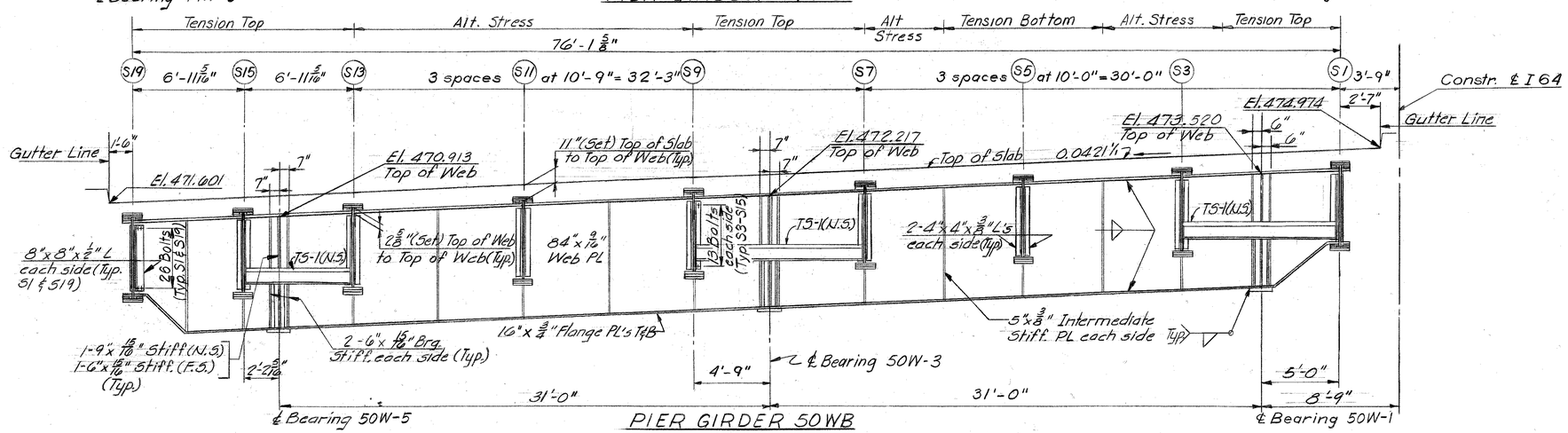

PIER GIRDER 50WB

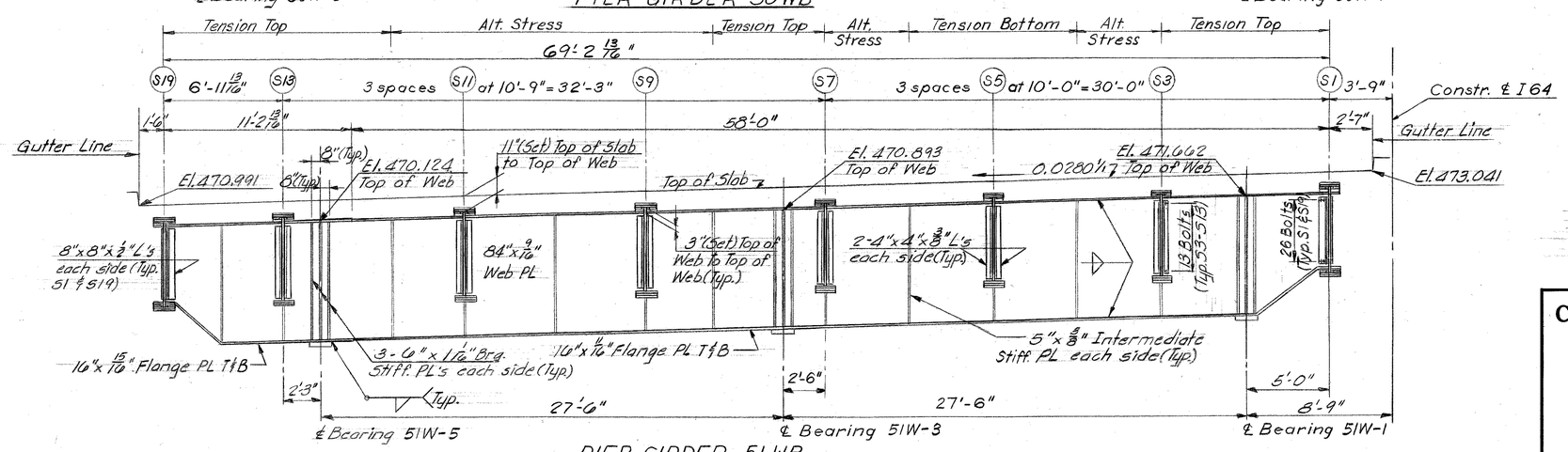

PIER GIRDER 51 WB

NOTE
All steel this sheet ASTM A36
For Sign Support Details See Sheet A149
For Pier Girder Notes see Sheet A129
(1) See Sh. A139 for Stringer Splice.

SHEET A132

PIER GIRDERS
STRUCTURAL STEEL

COMMONWEALTH OF KENTUCKY
DEPARTMENT OF HIGHWAYS
FRANKFORT
COUNTY OF
JEFFERSON

I64-13TH ST. TO 7TH ST.
LOUISVILLE - LEXINGTON
ROAD

STATION 208+08 **PROJECT NO.** I64-2(35)3 SP 56-273-11L

BRIDGE NUMBER	DRAWING NO.	INDEX
	18572	

DESIGNED BY EB	CHECKED BY PME	DATE 9-70	REVISED Pier 49W.B.*
DETAILED BY R.H. McCarty	CHECKED BY B.V.L.	DATE 11-70	REVISED
TRACED BY	CHECKED BY	DATE	REVISED
		DATE 4-75	

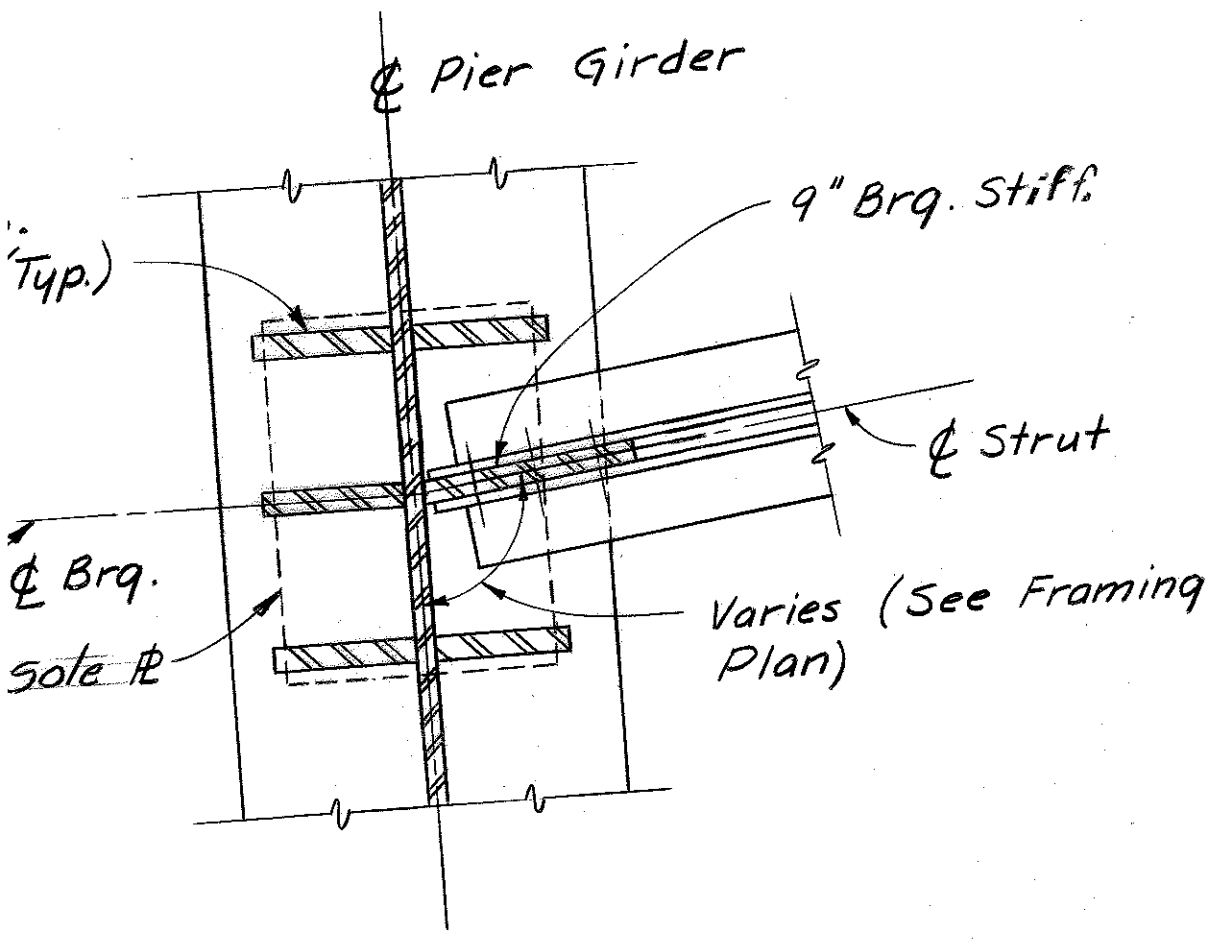

SECTION B-B

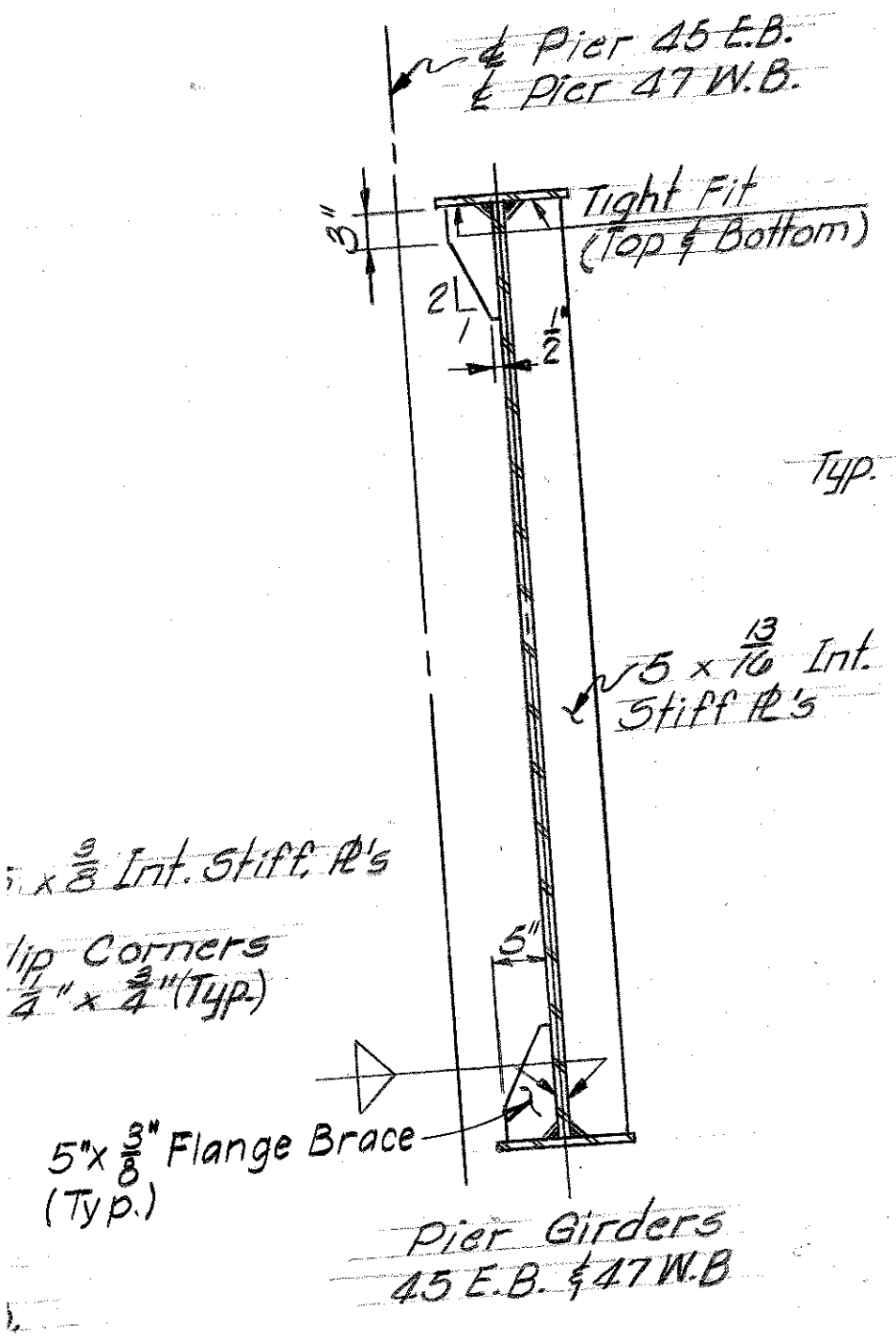

ERMEDIATE STIFFENERS

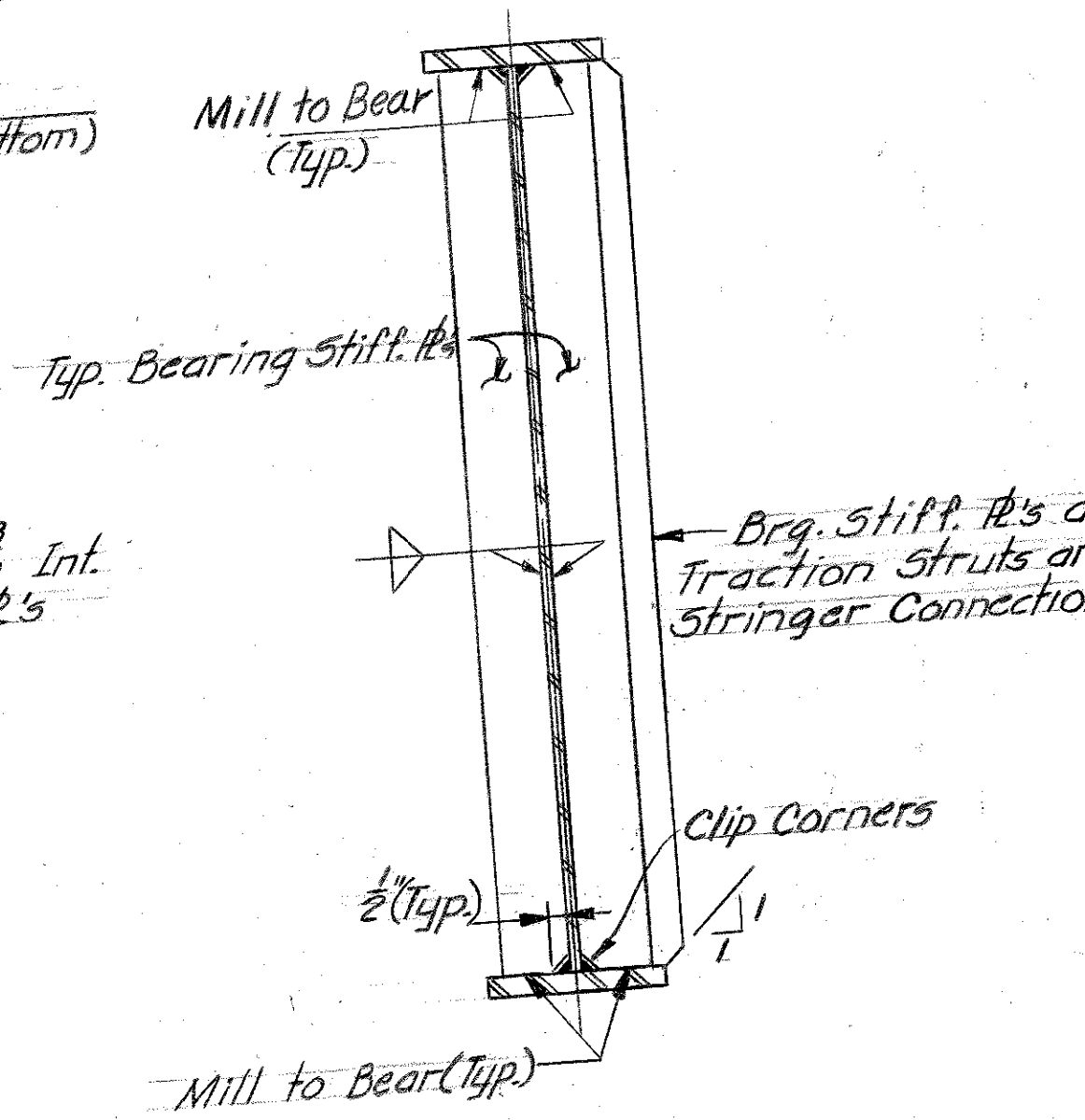

BEARING STIFFENERS
(For thickness and spacing see Pier Girder Details)

PIER GIRDER STIFFENERS

SHEET A13

Note
For Location of Traction Struts see Framing Plan.

PIER GIRDERS
STRUCTURAL STEEL

COMMONWEALTH OF KENTUC
DEPARTMENT OF HIGHWAYS
FRANKFORT
COUNTY OF
JEFFERSON
I 64-13TH ST. TO 7TH ST.
LOUISVILLE—LEXINGTON ROAD
SP 56-
P. E. PROJECT NO. I 64-
STATION 208+08
CONSTRUCTION PROJECT NO.
MAINTENANCE PROJECT NO.

FED. ROAD DIST.	STATE	FED. AID PRO. NO.	FISCAL YEAR	SHEET NO.	TOTAL SHEETS
7	KY.				

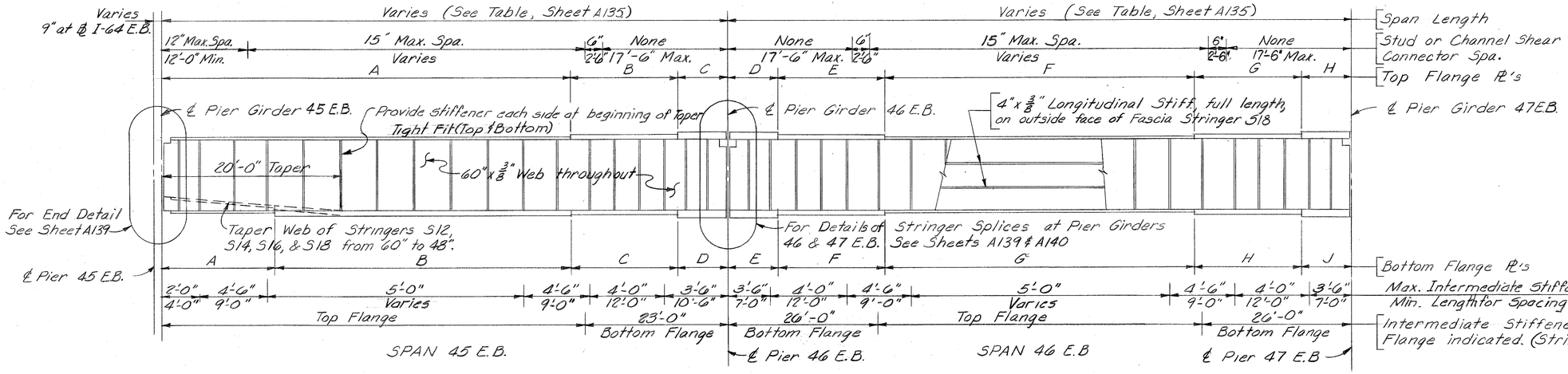

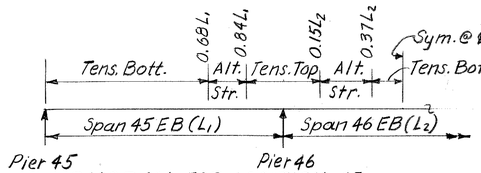

DIAGRAM FOR LOCATION OF TENSION FLANGE
(Typ. for Str. S2-S10 & S14-S18)

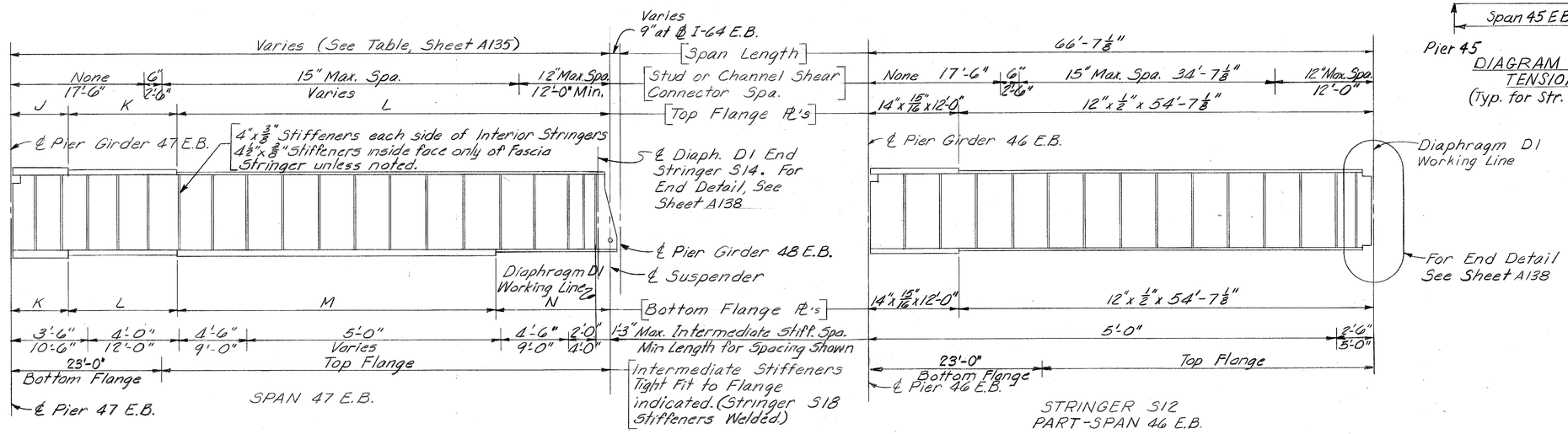

STRINGER ELEVATION
UNIT VII E.B.

All Steel ASTM A36 Unless noted

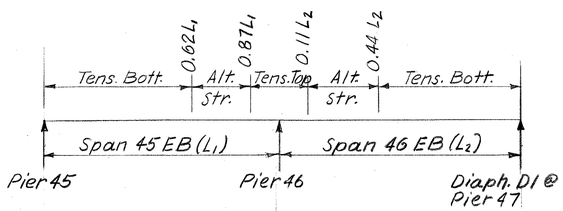

DIAGRAM FOR LOCATION OF TENSION FLANGE
(Stringer S12 Only)

NOTES

1. For Structural Steel Notes see Sheet A3
2. All dimensions shown are horizonal and should be corrected for grade where applicable.
3. Intermediate stiffeners shall be fabricated perpendicular to the stringer flanges.
4. Bolts 7/8" ϕ A325 unless noted. Holes 15/16" ϕ unless noted.
5. For Pier Girder details see Sheets A129 thru A133
6. For Weld details see Sheet A139

STRINGERS
STRUCTURAL STEEL

SHEET A134

COMMONWEALTH OF KENTUCKY
DEPARTMENT OF HIGHWAYS
FRANKFORT
COUNTY OF
JEFFERSON
I64-13TH ST. TO 7TH ST.
LOUISVILLE – LEXINGTON ROAD
S P 56-273-11L
STATION 208+08
PROJECT NO. I64-2(35)3

BRIDGE NUMBER	DRAWING NO.	INDEX
	18572	

DESIGNED BY EB DATE 7-70 CHECKED BY PME
DETAILED BY GMA DATE 10-70 CHECKED BY RWL
TRACED BY CHECKED BY
REVISED DATE REVISED DATE REVISED DATE

FED. ROAD DIST.	STATE	FED. AID PRO. NO.	FISCAL YEAR	SHEET NO.	TOTAL SHEETS
7	KY.				

TOP FLANGE PLATES UNIT VII E.B.

	SPAN 45 E.B.			SPAN 46 E.B.					SPAN 47 E.B.		
	A	B	C	D	E	F	G	H	J	K	L
S2	12" x 1/2" x 51'-2 5/16"	12" x 7/8" x 15'-0"	16" x 1 11/16" x 12'-0"	16" x 1 11/16" x 13'-0"	12" x 7/8" x 15'-0"	12" x 1/2" x 30'-0 1/4"	12" x 7/8" x 15'-0"	16" x 1 11/16" x 13'-0"	16" x 1 11/16" x 12'-0"	12" x 7/8" x 15'-0"	12" x 1/2" x 51'-2 5/16"
S4	12" x 1/2" x 53'-8 7/8"	12" x 11/16" x 15'-0"	14" x 1 7/16" x 10'-0"	14" x 1 7/16" x 10'-0"	12" x 11/16" x 15'-0"	12" x 1/2" x 36'-7 3/16"	12" x 11/16" x 15'-0"	14" x 1 5/16" x 10'-0"	14" x 1 7/16" x 10'-0"	12" x 11/16" x 15'-0"	12" x 1/2" x 53'-8 7/8"
S6	12" x 1/2" x 54'-3 3/8"	do.	do.	do.	do.	12" x 1/2" x 37'-2 5/8"	do.	do.	do.	do.	12" x 1/2" x 54'-3 3/8"
S8	12" x 1/2" x 54'-9 15/16"	do.	do.	do.	do.	12" x 1/2" x 37'-9 13/16"	do.	do.	do.	do.	12" x 1/2" x 54'-9 15/16"
S10	12" x 1/2" x 54'-4 7/16"	do.	14" x 1 3/8" x 11'-0"	14" x 1 3/8" x 12'-0"	do.	12" x 1/2" x 35'-5"	12" x 3/8" x 15'-0"	14" x 1 7/16" x 11'-0"	14" x 1 7/16" x 12'-0"	12" x 3/8" x 15'-0"	12" x 1/2" x 53'-4 7/16"
S12	12" x 1/2" x 68'-9 9/16"		14" x 15/16" x 12'-0"	For Stringer S12 in Span 46 E.B. See Sheet 1							
S14	12" x 3/8" x 55'-3 3/4"	12" x 11/16" x 15'-0"	14" x 1 3/8" x 11'-0"	14" x 1 3/8" x 12'-0"	12" x 11/16" x 15'-0"	12" x 1/2" x 36'-4 15/16"	12" x 11/16" x 15'-0"	14" x 1 3/8" x 11'-0"	14" x 1 3/8" x 12'-0"	12" x 11/16" x 15'-0"	12" x 1/2" x 52'-7 7/16" *
S16	12" x 1/2" x 56'-10 5/16"	do.	14" x 1 3/8" x 10'-0"	14" x 1 3/8" x 10'-0"	do.	12" x 1/2" x 40'-0 1/8"	do.	14" x 1 3/8" x 10'-0"	14" x 1 3/8" x 10'-0"	do.	12" x 1/2" x 56'-7 11/16"
S18	12" x 1/2" x 55'-4 13/16"	12" x 7/8" x 15'-0"	16" x 1 7/16" x 12'-0"	16" x 1 11/16" x 13'-0"	12" x 7/8" x 15'-0"	12" x 1/2" x 34'-7 7/16"	12" x 7/8" x 15'-0"	16" x 1 11/16" x 13'-0"	16" x 1 11/16" x 12'-0"	12" x 7/8" x 15'-0"	12" x 1/2" x 55'-2 7/16"

* Measured to Diaph DI Working Line

STR. LENGTHS UNIT VII E.B.

	45 E.B.	46 E.B.	47 E.B.
S2	78'-2 5/16"	86'-0 1/4"	78'-2 5/16"
S4	78'-8 7/8"	86'-7 7/16"	78'-8 7/8"
S6	79'-3 3/8"	87'-2 5/8"	79'-3 3/8"
S8	79'-9 15/16"	87'-9 13/16"	79'-9 15/16"
S10	80'-4 7/16"	88'-5"	80'-4 7/16"
S12	80'-9 9/16"	See Sheet 1	
S14	81'-3 3/4"	89'-4 15/16"	79'-7 3/16" *
S16	81'-10 5/16"	90'-0 1/8"	81'-7 11/16"
S18	82'-4 13/16"	90'-7 5/16"	82'-2 7/16"

* ℄ Pier Girder 47 E.B. to Diaph DI Working Line

BOTTOM FLANGE PLATES UNIT VII E.B.

	SPAN 45 E.B.				SPAN 46 E.B.					SPAN 47 E.B.			
	A	B	C	D	E	F	G	H	J	K	L	M	N
S2	12" x 3/4" x 14'-0"	12" x 1 7/16" x 37'-2 5/16"	12" x 7/8" x 15'-0"	16" x 1 11/16" x 12'-0"	16" x 1 11/16" x 13'-0"	12" x 7/8" x 15'-0"	12" x 5/8" x 30'-0 1/4"	12" x 7/8" x 15'-0"	16" x 1 11/16" x 13'-0"	16" x 1 11/16" x 12'-0"	12" x 7/8" x 15'-0"	12" x 1 7/16" x 37'-2 5/16"	12" x 3/4" x 14'-0"
S4	12" x 1/2" x 15'-0"	12" x 15/16" x 38'-8 7/8"	12" x 11/16" x 15'-0"	14" x 1 7/16" x 10'-0"	14" x 1 5/16" x 10'-0"	12" x 11/16" x 15'-0"	12" x 1/2" x 36'-7 3/16"	12" x 11/16" x 15'-0"	14" x 1 5/16" x 10'-0"	14" x 1 5/16" x 10'-0"	12" x 11/16" x 15'-0"	12" x 15/16" x 38'-8 7/8"	12" x 1/2" x 15'-0"
S6	do.	12" x 15/16" x 39'-3 3/8"	do.	do	do	do.	12" x 1/2" x 37'-2 5/8"	do	do	do.	do.	12" x 15/16" x 39'-3 3/8"	do.
S8	do.	12" x 15/16" x 39'-9 15/16"	do.	do	do	do.	12" x 1/2" x 37'-9 13/16"	do	do	do.	do.	12" x 15/16" x 39'-9 15/16"	do.
S10	do.	12" x 15/16" x 39'-4 7/16"	do.	14" x 1 3/8" x 11'-0"	14" x 1 3/8" x 12'-0"	do.	12" x 7/16" x 35'-5"	12" x 3/8" x 15'-0"	14" x 1 7/16" x 11'-0"	14" x 1 7/16" x 12'-0"	12" x 3/8" x 15'-0"	12" x 5/8" x 33'-4 7/16"	12" x 1/2" x 20'-0"
S12	do.	12" x 15/16" x 38'-9 9/16"	12" x 1/2" x 15'-0"	14" x 15/16" x 12'-0"	For Stringer S12 in Span 46 E.B. See Sheet 1								
S14	do.	12" x 15/16" x 40'-3 3/4"	12" x 11/16" x 15'-0"	14" x 1 3/8" x 11'-0"	14" x 1 3/8" x 12'-0"	12" x 11/16" x 15'-0"	12" x 9/16" x 36'-4 15/16"	12" x 11/16" x 15'-0"	14" x 1 3/8" x 11'-0"	14" x 1 3/8" x 12'-0"	12" x 11/16" x 15'-0"	12" x 9/16" x 52'-7 3/16" *	
S16	12" x 5/8" x 15'-0"	12" x 1 1/16" x 41'-10 5/16"	do.	14" x 1 3/8" x 10'-0"	14" x 1 3/8" x 10'-0"	do.	12" x 1/2" x 40'-0 1/8"	do	14" x 1 3/8" x 10'-0"	14" x 1 3/8" x 10'-0"	do.	12" x 1 7/16" x 41'-7 11/16"	12" x 9/16" x 15'-0"
S18	12" x 1/2" x 15'-0"	12" x 1 7/16" x 40'-4 13/16"	12" x 1/2" x 15'-0"	16" x 1 11/16" x 12'-0"	16" x 1 11/16" x 13'-0"	12" x 7/8" x 15'-0"	12" x 5/8" x 34'-7 7/16"	12" x 7/8" x 15'-0"	16" x 1 11/16" x 13'-0"	16" x 1 11/16" x 12'-0"	12" x 7/8" x 15'-0"	12" x 1 7/16" x 41'-2 3/16"	12" x 3/4" x 14'-0"

* Measured to Diaph. DI Working Line

DESIGNED BY EB CHECKED BY FWC DATE 7-70 REVISED DATE
DETAILED BY GMA CHECKED BY RJL DATE 10-70 REVISED DATE
TRACED BY CHECKED BY DATE REVISED DATE

STRINGERS
STRUCTURAL STEEL

SHEET A135

COMMONWEALTH OF KENTUCKY
DEPARTMENT OF HIGHWAYS
FRANKFORT
COUNTY OF
JEFFERSON
I64-13TH ST. TO 7TH ST.
LOUISVILLE – LEXINGTON
ROAD
STATION 208+08 PROJECT NO. I64-2(35)3 SP 56-273-11L

BRIDGE NUMBER | DRAWING NO. 18572 | INDEX

FED. ROAD DIST.	STATE	FED. AID PRO. NO.	FISCAL YEAR	SHEET NO.	TOTAL SHEETS
7	KY.				

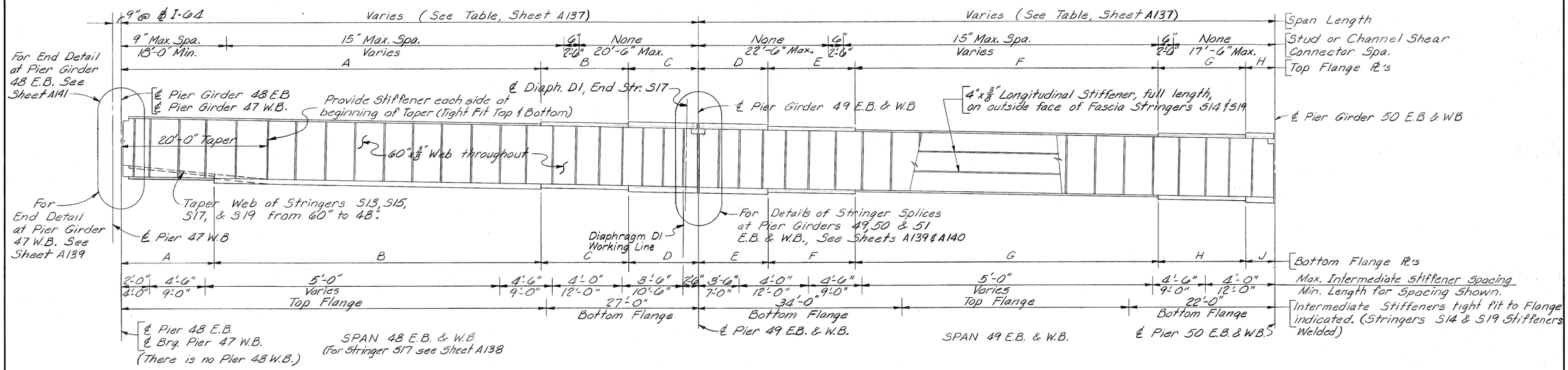

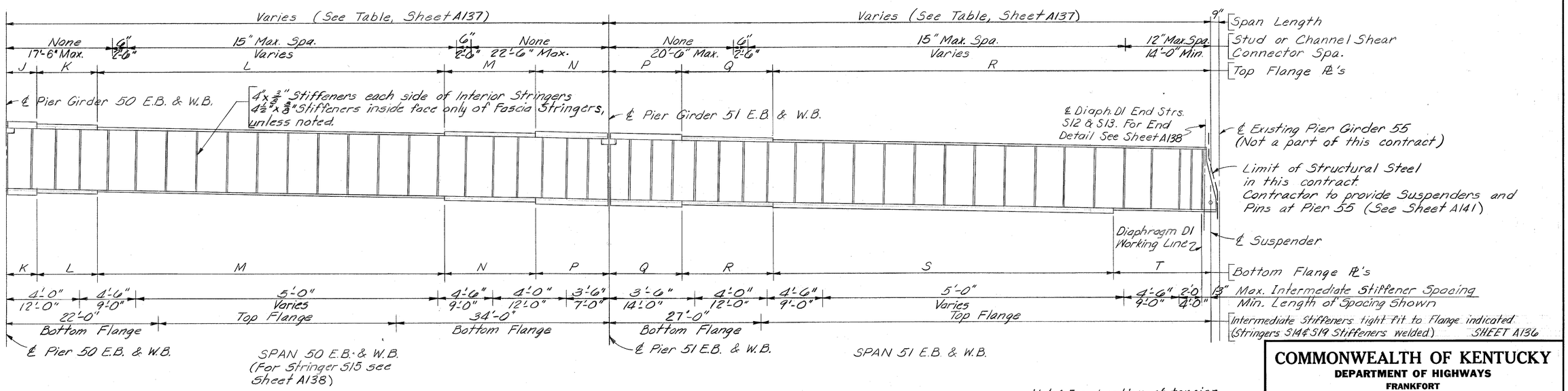

Note: For location of tension flange see Sheet A137

STRINGER ELEVATION
UNIT VIII E.B. & W.B.

All Steel ASTM A36 Unless noted

STRINGERS
STRUCTURAL STEEL

COMMONWEALTH OF KENTUCKY
DEPARTMENT OF HIGHWAYS
FRANKFORT
COUNTY OF
JEFFERSON
I64-13TH ST. TO 7TH ST.
LOUISVILLE - LEXINGTON
ROAD SP 56-273-11L
STATION 208+08 **PROJECT NO.** I64-2(35)3

BRIDGE NUMBER	DRAWING NO.	INDEX
	18572	

DESIGNED BY EB CHECKED BY PME DATE 7-70 REVISED DATE
DETAILED BY G.M.A. CHECKED BY R.J.re.L DATE 10-70 REVISED DATE
TRACED BY CHECKED BY DATE REVISED DATE

FED. ROAD DIST.	STATE	FED. AID PRO. NO.	FISCAL YEAR	SHEET NO.	TOTAL SHEETS
7	KY.				

TOP FLANGE PLATES

		SPAN 48 E.B. & W.B.			SPAN 49 E.B. & W.B.					SPAN 50 E.B. & W.B.					SPAN 51 E.B. & W.B.			
		A	B	C	D	E	F	G	H	J	K	L	M	N	P	Q	R	
UNIT VIII E.B.	S2	12"x 9/16"x70'-0 3/8"	14"x 15/16"x15'-0"	18"x1 1/8"x14'-0"	18"x1 1/8"x16'-0"	14"x 15/16"x15'-0"	12"x 1/2"x41'-10"	12"x 7/8"x15'-0"	14"x1 3/4"x11'-0"	14"x1 3/4"x11'-0"	12"x 7/8"x15'-0"	12"x 5/8"x41'-10"	14"x 15/16"x15'-0"	18"x1 1/8"x16'-0"	18"x1 7/8"x14'-0"	14"x 15/16"x15'-0"	12"x 1/2"x69'-10"	70'-0 1/2"
	S4	12"x 1/2"x70'-9 3/16"	12"x1"x15'-0"	16"x1 15/16"x14'-0"	16"x1 15/16"x16'-0"	12"x1"x15'-0"	12"x 1/2"x44'-10"	12"x 13/16"x15'-0"	14"x1 1/4"x8'-0"	14"x1 1/4"x8'-0"	12"x 13/16"x15'-0"	12"x 5/8"x45'-10"	12"x1"x15'-0"	16"x1 15/16"x15'-0"	16"x1 15/16"x14'-0"	12"x1"x15'-0"	do.	
	S6	12"x 1/2"x71'-5 1/16"	do.	do.	do.	do.	do.	do.	do.	do.	do.	do.	do.	do.	do.	do.	do.	
	S8	12"x 1/2"x72'-1 3/8"	do.	do.	do.	do.	do.	do.	do.	do.	do.	do.	do.	do.	do.	do.	do.	
	S10	12"x 1/2"x72'-10"	do.	do.	do.	do.	do.	do.	do.	do.	do.	do.	do.	do.	do.	do.	do.	
	S12	12"x 1/2"x73'-5 3/4"	do.	do	do.	do.	12"x 1/2"x44'-10 1/16"	do.	do.	do.	do.	12"x 1/2"x45'-10 1/16"	do.	do.	do.	do.	12"x 1/2"x68'-7 11/16"*	9 9/16"*
	S14	12"x 9/16"x74'-1 15/16"	14"x 15/16"x15'-0"	18"x1 1/8"x14'-0"	18"x1 1/8"x16'-0"	14"x 15/16"x15'-0"	12"x 1/2"x41'-10 1/4"	12"x 7/8"x15'-0"	14"x1 3/4"x11'-0"	14"x1 3/4"x11'-0"	12"x 7/8"x15'-0"	12"x 1/2"x41'-10 1/4"	14"x 15/16"x15'-0"	18"x1 1/8"x16'-0"	18"x1 7/8"x14'-0"	14"x 15/16"x15'-0"	12"x 1/2"x69'-10 1/4"	70'-0 3/4"
UNIT VIII W.B.	S1	12"x 9/16"x69'-7 1/16"	14"x 15/16"x15'-0"	18"x1 1/8"x14'-0"	18"x1 1/8"x16'-0"	14"x 15/16"x15'-0"	12"x 1/2"x41'-10"	12"x 7/8"x15'-0"	14"x1 3/4"x11'-0"	14"x1 3/4"x11'-0"	12"x 7/8"x15'-0"	12"x 1/2"x41'-10"	14"x 15/16"x15'-0"	18"x1 1/8"x16'-0"	18"x1 7/8"x14'-0"	14"x 15/16"x15'-0"	12"x 1/2"x69'-10"	70'-0 1/2"
	S3	12"x 1/2"x68'-6 5/8"	12"x1"x15'-0"	16"x1 1/8"x14'-0"	16"x1 1/8"x15'-0"	12"x1"x15'-0"	12"x 1/2"x45'-10"	12"x 13/16"x15'-0"	14"x1 15/16"x8'-0"	14"x1 15/16"x8'-0"	12"x 13/16"x15'-0"	12"x 1/2"x45'-10"	12"x1"x15'-0"	16"x1 1/8"x15'-0"	16"x1 7/8"x14'-0"	12"x1"x15'-0"	do.	
	S5	12"x 1/2"x67'-6 3/16"	do.	do.	do.	do.	do.	do.	do	do.	do.	do.	do.	do.	do.	do.	do.	
	S7	12"x 1/2"x68'-5 3/4"	do.	16"x1 1/8"x12'-0"	16"x1 3/8"x13'-0"	do.	12"x 1/2"x46'-10"	12"x 7/8"x15'-0"	14"x1 1/2"x9'-0"	14"x1 1/2"x9'-0"	12"x 7/8"x15'-0"	12"x 1/2"x44'-10"	do.	do.	16"x1 3/8"x13'-0"	do.	12"x 1/2"x70'-10"	71'-0 1/2"
	S9	12"x 1/2"x67'-4 3/8"	do.	do.	do.	do.	do.	do.	do	do.	do.	do.	do.	do.	do.	do.	do.	
	S11	12"x 1/2"x66'-2 15/16"	do.	do.	do.	do.	do.	do.	do	do.	do.	do.	do.	do.	do.	do.	do.	
	S13	12"x 1/2"x65'-1"	do.	do.	do.	do.	do.	do.	do	do	12"x 15/16"x15'-0"	do.	do.	do.	do.	do.	12"x 1/2"x69'-8 3/8"*	10 13/16"*
	S15	12"x 1/2"x62'-1 1/2"	12"x 15/16"x15'-0"	14"x1 13/16"x6'-0"	14"x1 13/16"x13'-0"	12"x 15/16"x15'-0"	12"x 1/2"x64'-10 3/8"		14"x 15/16"x6'-0"	For Stringer S15 in Span 50 W.B. See Sheet 5								
	S17	For Str. S17 in Span 48 W.B. See Sht. 5																
	S19	12"x 1/2"x58'-9 15/16"	12"x 7/8"x15'-0"	16"x1 3/4"x14'-0"	16"x1 3/4"x16'-0"	12"x 7/8"x15'-0"	12"x 1/2"x42'-0 3/8"	12"x 3/4"x15'-0"	14"x1 1/2"x11'-0"	14"x1 1/2"x11'-0"	12"x 3/4"x15'-0"	12"x 1/2"x42'-0 3/8"	12"x 7/8"x15'-0"	16"x1 3/4"x16'-0"	16"x1 3/4"x14'-0"	12"x 7/8"x15'-0"	12"x 1/2"x70'-0 3/8"	3 3/8"

* Measured to Diaph. DI Working Line

BOTTOM FLANGE PLATES

		SPAN 48 E.B. & W.B.				SPAN 49 E.B. & W.B.					SPAN 50 E.B. & W.B.					SPAN 51 E.B. & W.B.				
		A	B	C	D	E	F	G	H	J	K	L	M	N	P	Q	R	S	T	
UNIT VIII E.B.	S2	12"x 15/16"x15'-0"	12"x1 13/16"x55'-0 3/8"	14"x 15/16"x15'-0"	18"x1 1/8"x14'-0"	18"x1 1/8"x16'-0"	14"x 15/16"x15'-0"	12"x 11/16"x41'-10"	12"x 7/8"x15'-0"	14"x1 3/4"x11'-0"	14"x1 3/4"x11'-0"	12"x 7/8"x15'-0"	12"x 11/16"x41'-10"	14"x 15/16"x15'-0"	18"x1 1/8"x16'-0"	18"x1 7/8"x14'-0"	14"x 15/16"x15'-0"	12"x1 3/4"x54'-10"	12"x 7/8"x15'-0"	55'-0 1/2"
	S4	12"x 13/16"x15'-0"	12"x1 3/8"x55'-9 3/8"	12"x1"x15'-0"	16"x1 15/16"x14'-0"	16"x1 15/16"x16'-0"	12"x1"x15'-0"	12"x 11/16"x44'-10"	12"x 13/16"x15'-0"	14"x1 1/2"x8'-0"	14"x1 1/4"x8'-0"	12"x 13/16"x15'-0"	12"x 11/16"x45'-10"	12"x1"x15'-0"	16"x1 15/16"x15'-0"	16"x1 15/16"x14'-0"	12"x1"x15'-0"	12"x1 1/2"x53'-10"	12"x 7/8"x16'-0"	
	S6	do.	12"x1 5/8"x56'-5 7/16"	do.	do.	do.	do.	do.	do.	do.	do.	do.	do.	do.	do.	do.	do.	do.	do.	
	S8	do	12"x1 5/8"x57'-1 3/4"	do.	do.	do.	do.	do.	do.	do.	do.	do.	do.	do.	do.	do.	do.	do.	do.	
	S10	do.	12"x1 5/8"x57'-10"	do.	do.	do.	do.	do.	do.	do.	do.	do.	do.	do.	do.	do.	do.	do.	do.	
	S12	do.	12"x1 5/8"x58'-5 3/4"	do.	do.	do.	do.	12"x 11/16"x44'-10 1/16"	do.	do.	do.	do.	12"x 11/16"x45'-10 1/16"	do.	do.	do.	do.	12"x1 1/2"x52'-9 7/16"	do.*	9 9/16"
	S14	12"x 15/16"x15'-0"	12"x1 3/16"x59'-1 15/16"	14"x 15/16"x15'-0"	18"x1 1/8"x14'-0"	18"x1 1/8"x16'-0"	14"x 15/16"x15'-0"	12"x 11/16"x41'-10 1/4"	12"x 7/8"x15'-0"	14"x1 3/4"x11'-0"	14"x1 3/4"x11'-0"	12"x 7/8"x15'-0"	12"x 11/16"x41'-10 1/4"	14"x 15/16"x15'-0"	18"x1 1/8"x16'-0"	18"x1 7/8"x14'-0"	14"x 15/16"x15'-0"	12"x1 3/4"x54'-10 1/4"	12"x 7/8"x15'-0"	55'-0 3/4"
UNIT VIII W.B.	S1	12"x 15/16"x15'-0"	12"x1 13/16"x54'-7 1/16"	14"x 15/16"x15'-0"	18"x1 1/8"x14'-0"	18"x1 1/8"x16'-0"	14"x 15/16"x15'-0"	12"x 11/16"x41'-10"	12"x 7/8"x15'-0"	14"x1 3/4"x11'-0"	14"x1 3/4"x11'-0"	12"x 7/8"x15'-0"	12"x 11/16"x41'-10"	14"x 15/16"x15'-0"	18"x1 1/8"x16'-0"	18"x1 7/8"x14'-0"	14"x 15/16"x15'-0"	12"x1 3/4"x54'-10"	12"x 7/8"x15'-0"	55'-0 1/2"
	S3	12"x 3/4"x16'-0"	12"x1 1/2"x52'-6 5/8"	12"x1"x15'-0"	16"x1 7/8"x14'-0"	16"x1 3/8"x15'-0"	12"x1"x15'-0"	12"x 11/16"x45'-10"	12"x 13/16"x15'-0"	14"x1 15/16"x8'-0"	14"x1"x8'-0"	12"x 13/16"x15'-0"	12"x 11/16"x45'-10"	12"x1"x15'-0"	16"x1 1/8"x15'-0"	16"x1 7/8"x14'-0"	12"x1"x15'-0"	12"x1 1/2"x53'-10"	12"x 7/8"x16'-0"	54'-0 1/2"
	S5	do.	12"x1 1/2"x51'-6 3/16"	do.	do.	do.	do.	do.	do.	do.	do.	do.	do.	do.	do.	do.	do.	do.	do.	
	S7	12"x 13/16"x16'-0"	12"x1 15/16"x52'-5 3/4"	do.	16"x1 1/2"x12'-0"	16"x1 1/2"x13'-0"	do.	12"x 7/8"x61'-10"		14"x1 1/2"x9'-0"	14"x1 1/2"x9'-0"	12"x 7/8"x59'-10"		do.	do.	16"x1 1/8"x13'-0"	do.	12"x1 3/4"x54'-10"	12"x 7/8"x16'-0"	55'-0 1/2"
	S9	do.	12"x1 9/16"x51'-4 3/8"	do.	do.	do.	do.	do.		do.	do.	do.		do.	do.	do.	do.	do.	do.	
	S11	do.	12"x1 9/16"x50'-2 15/16"	do.	do.	do.	do.	do.		do.	do.	do.		do.	do.	do.	do.	do.	do.	
	S13	do.	12"x1 9/16"x49'-1"	do.	do.	do.	do.	do.		do.	do.	12"x 15/16"x59'-10"		do.	do.	do.	do.	12"x1 3/4"x53'-8 3/8"	do.*	10 13/16"
	S15	12"x 1/2"x14'-0"	12"x 15/16"x63'-1 3/4"		14"x1 13/16"x13'-0"	14"x1 13/16"x13'-0"	12"x 15/16"x15'-0"	12"x 11/16"x49'-10 3/8"	12"x 1/2"x15'-0"	14"x 15/16"x6'-0"	For Stringer S15 in Span 50 W.B. See Sheet 5									
	S17	For Stringer S17 in Span 48 W.B. See Sheet 5																		
	S19	12"x 3/8"x15'-0"	12"x1 1/16"x43'-9 15/16"	12"x 7/8"x15'-0"	16"x1 3/4"x14'-0"	16"x1 3/4"x16'-0"	12"x 7/8"x15'-0"	12"x 1/2"x42'-0 3/8"	12"x 3/4"x15'-0"	14"x1 1/2"x11'-0"	14"x1 1/2"x11'-0"	12"x 3/4"x57'-0 3/8"		12"x 7/8"x15'-0"	16"x1 3/4"x16'-0"	16"x1 3/4"x14'-0"	12"x 7/8"x15'-0"	12"x1"x55'-0 3/8"	12"x 1/2"x15'-0"	3 3/8"

* Measured to Diaph. DI Working Line

TABLE OF STRINGER LENGTHS

		48 E.B. & W.B.	49 E.B. & W.B.	50 E.B. & W.B.	51 E.B. & W.B.
UNIT VIII E.B.	S2	99'-0 3/8"	98'-10"	98'-10"	98'-10"
	S4	99'-9 3/16"	do.	do.	do.
	S6	100'-5 7/16"	do.	do.	do.
	S8	101'-1 3/4"	do.	do.	do.
	S10	101'-10"	do.	do.	do.
	S12	102'-5 3/4"	98'-10 1/16"	98'-10 1/16"	97'-7 1/16"*
	S14	103'-1 15/16"	98'-10 1/4"	98'-10 1/4"	98'-10 1/4"
UNIT VIII W.B.	S1	98'-7 1/16"	98'-10"	98'-10"	98'-10"
	S3	97'-6 5/8"	do.	do.	do.
	S5	96'-6 3/16"	do.	do.	do.
	S7	95'-5 3/4"	do.	do.	do.
	S9	94'-4 3/8"	do.	do.	do.
	S11	93'-2 15/16"	do.	do.	do.
	S13	92'-1"	do.	do.	97'-8 3/8"*
	S15	90'-1 1/2"	98'-10 3/8"	See Sht. 5	
	S17	See Sht. 5			
	S19	87'-9 15/16"	99'-0 3/8"	99'-0 3/8"	99'-0 3/8"

* @ Pier Girder S1 to Diaph. DI Working Line

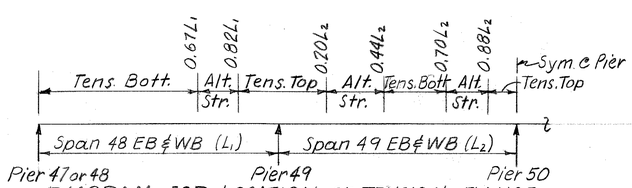

DIAGRAM FOR LOCATION OF TENSION FLANGE
(Typ. All Stringers EB & WB Except S15 & S17)

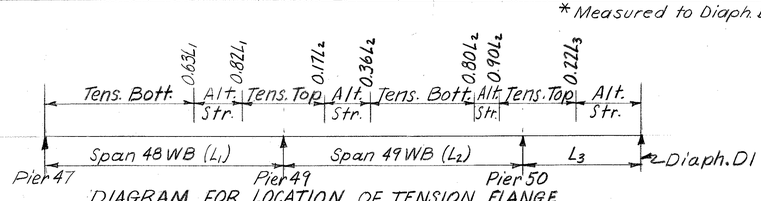

DIAGRAM FOR LOCATION OF TENSION FLANGE
(Stringer S15 Only)

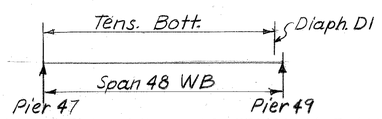

DIAGRAM FOR LOCATION OF TENSION FLANGE
(Stringer S17 Only)

STRINGERS
STRUCTURAL STEEL

SHEET A137

COMMONWEALTH OF KENTUCKY
DEPARTMENT OF HIGHWAYS
FRANKFORT
COUNTY OF
JEFFERSON
I64-13TH ST. TO 7TH ST.
LOUISVILLE - LEXINGTON
ROAD

STATION 208+08 **PROJECT NO.** I64-2(35)3 SP 56-273-11L

BRIDGE NUMBER	DRAWING NO.	INDEX
	18572	

DESIGNED BY EB CHECKED BY PME DATE 7-70 REVISED DATE 4/5/78
DETAILED BY GM. A CHECKED BY B. Lock DATE 10-70 REVISED DATE
TRACED BY CHECKED BY DATE REVISED DATE

Span 51: Dim. 'R' Top & Dim. 'S' Bottom

FED. ROAD DIST.	STATE	FED. AID PRO. NO.	FISCAL YEAR	SHEET NO.	TOTAL SHEETS
7	KY.				

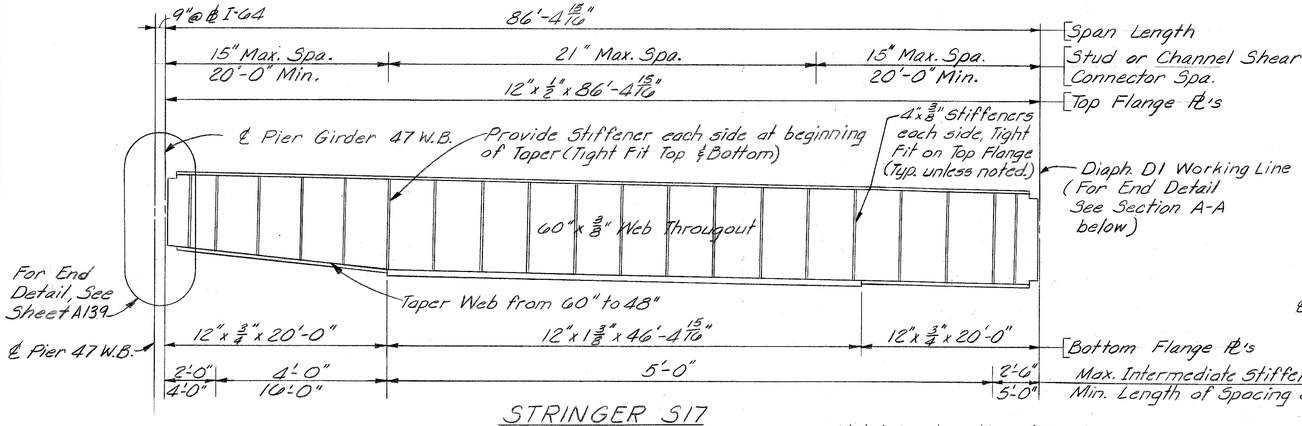

STRINGER S17
SPAN 48 W.B.
(There is no Pier 48 W.B.)

Note: For Location of Tension Flange See Sh. A137

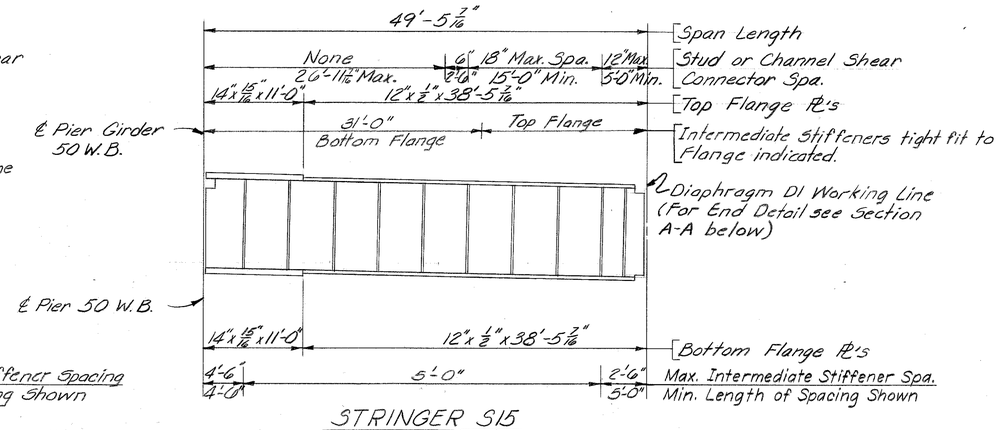

STRINGER S15
PART-SPAN 50 W.B.

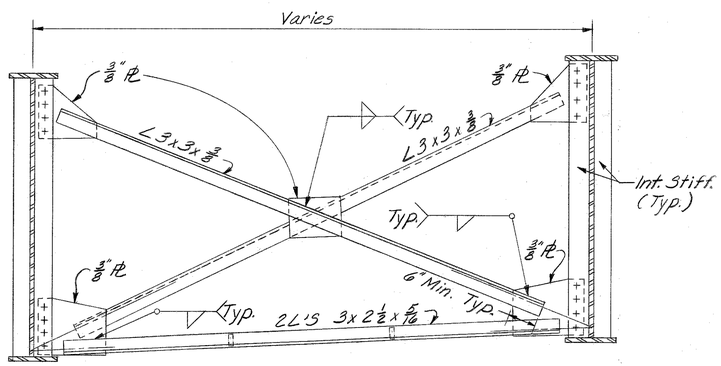

ELEVATION CROSS-FRAME CF1

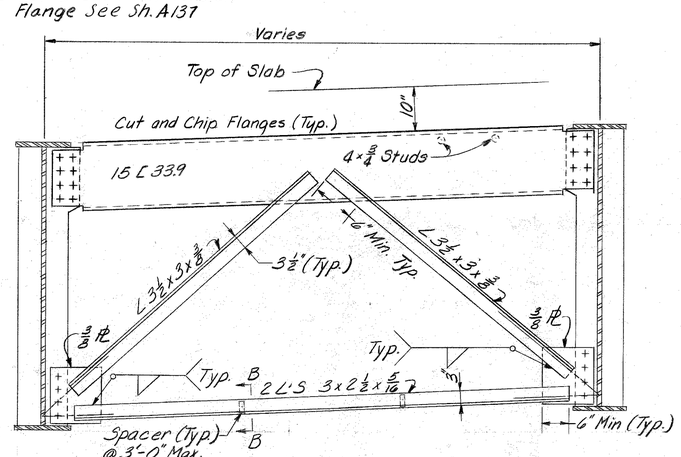

ELEVATION CROSS-FRAME CF2 ①
TYPICAL @ HANGERS

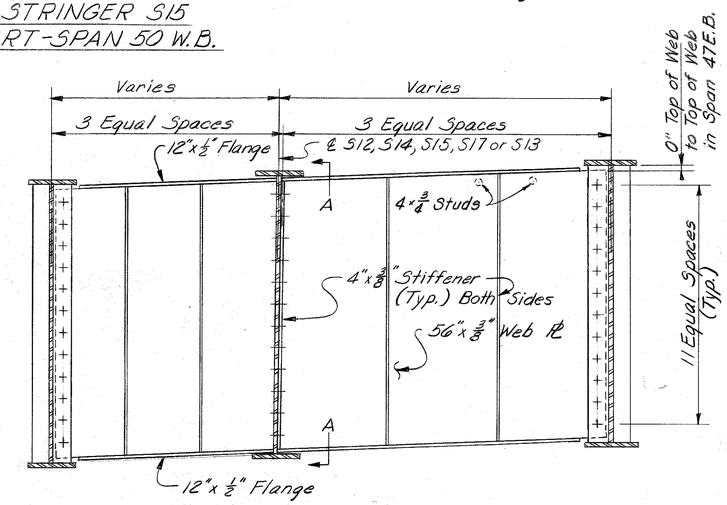

DIAPHRAGM D1.

Typical at end of Stringer S12 in Span 46 E.B., S14 in 47 E.B.①, S15 in 50 W.B., S17 in 48 W.B., S12 in 51 E.B.①, and S13 in 51 W.B.① (See Framing Plan)

① - See Expansion Dam Details for location of Studs and Slotted Holes in flange.

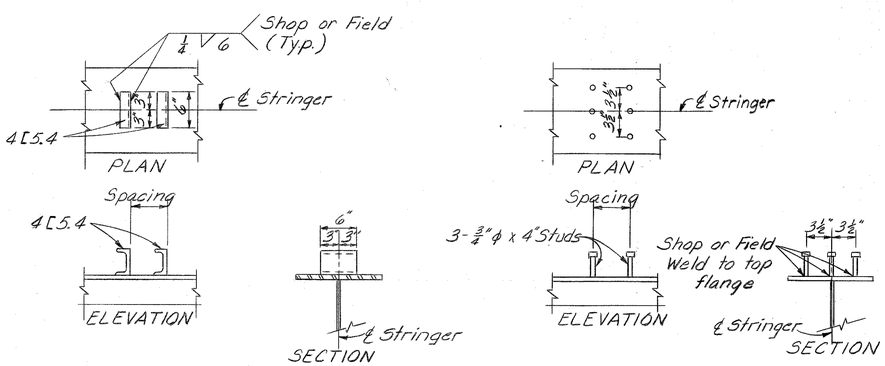

OPTION 2 OPTION 1
SHEAR CONNECTOR DETAILS

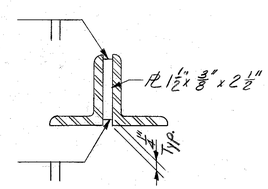

SECTION B-B

STRINGERS
STRUCTURAL STEEL

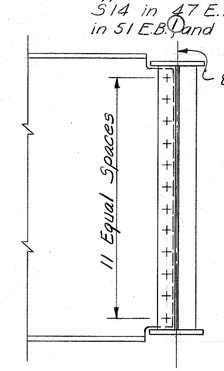

SECTION A-A

Note:
All Steel this sheet ASTM A36 unless noted.

SHEET A138

COMMONWEALTH OF KENTUCKY
DEPARTMENT OF HIGHWAYS
FRANKFORT
COUNTY OF
JEFFERSON
I64-13TH ST. TO 7TH ST.
LOUISVILLE - LEXINGTON
ROAD
STATION 208+08 **PROJECT NO.** I64-2(35)3 SP 56-273-11L

BRIDGE NUMBER	DRAWING NO.	INDEX
	18572	

DESIGNED BY EB	CHECKED BY PME	DATE 7-70	REVISED DATE
DETAILED BY GMA	CHECKED BY Black	DATE 10-70	REVISED DATE
TRACED BY	CHECKED BY	DATE	REVISED DATE

FED. ROAD DIST.	STATE	FED. AID PRO. NO.	FISCAL YEAR	SHEET NO.	TOTAL SHEETS
7	KY.				

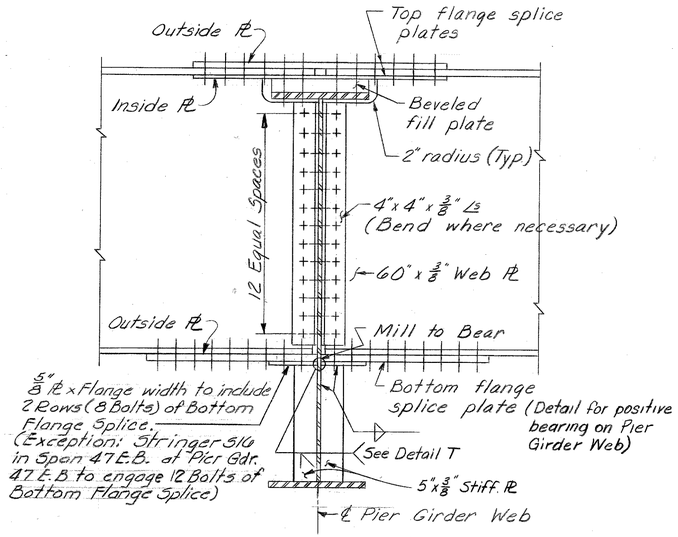

TYPICAL INTERIOR STRINGER SPLICE

(Web Splice for the following Fascia & Median Stringers: S1 & S19 at Pier Girder 49 W.B. and S2 at Pier Girder 47 E.B.)

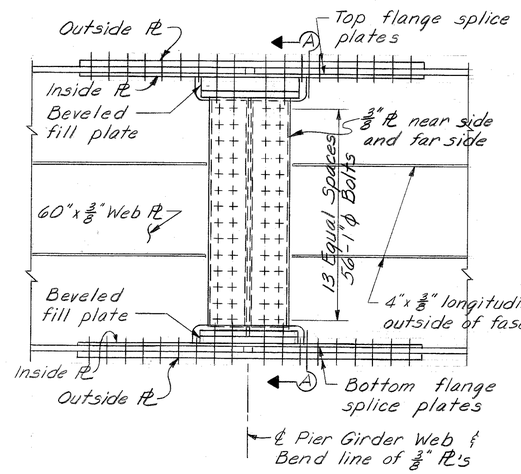

TYPICAL FASCIA AND MEDIAN STRINGER SPLICE

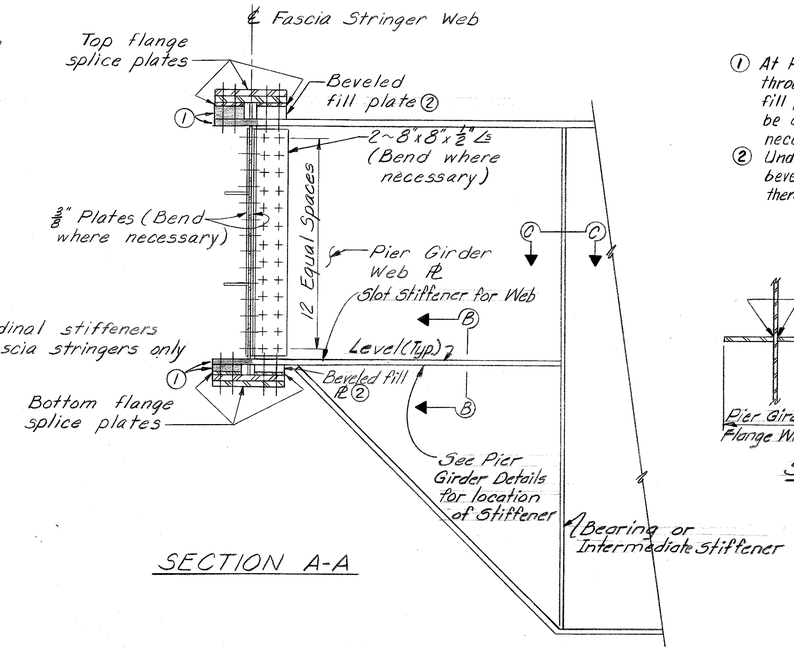

SECTION A-A

① At Pier Girders where stringers extend straight through (do not change direction) the shaded fill plate and portion of pier girder flange may be omitted. (Opening in stringer web not necessary)

② Under some circumstances as above the beveled fill plate may be omitted providing there is clearance for the bolts.

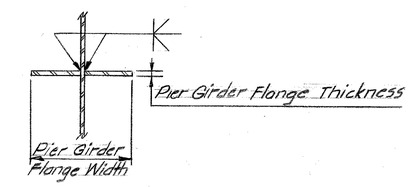

SECTION B-B

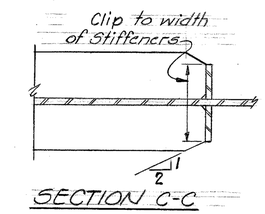

SECTION C-C

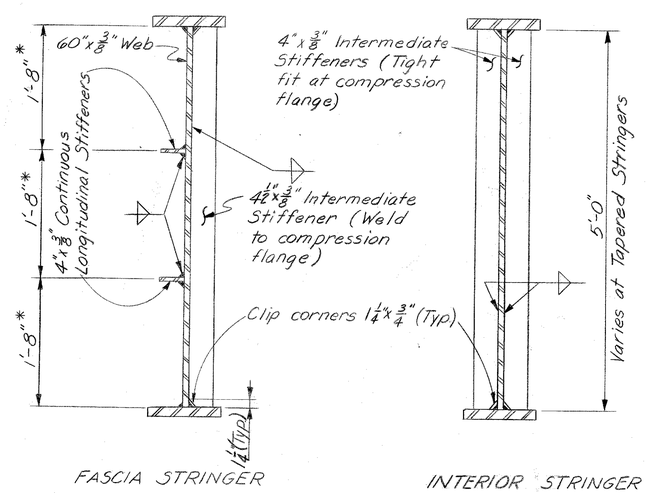

INTERMEDIATE STIFFENER DETAILS

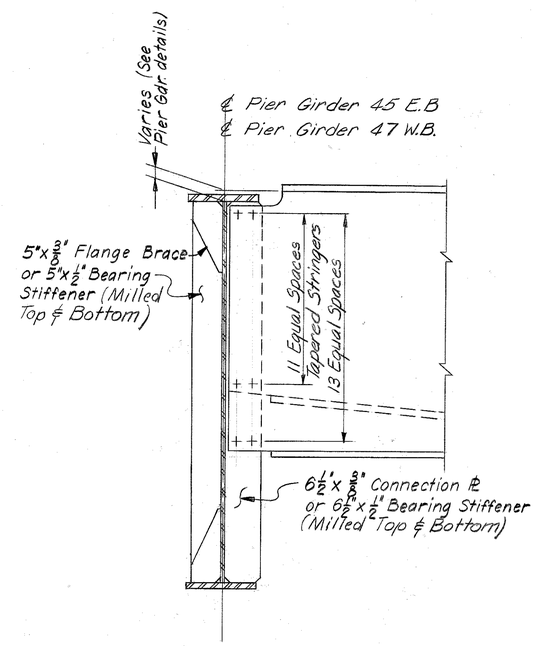

STRINGER END DETAILS
PIER GIRDER 45 E.B.
PIER GIRDER 47 W.B.

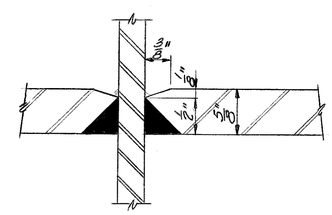

DETAIL T

NOTE: For details of top and bottom splice PL's, see following sheet
All Steel this sheet ASTM A36 unless noted
* Where Girder web varies in depth place Long Stiff. to give three equal spaces.

SHEET A139

DESIGNED BY	EB	CHECKED BY	PME	DATE	7-70	REVISED		DATE	
DETAILED BY	GMA	CHECKED BY	TB	DATE	10-70	REVISED		DATE	
TRACED BY		CHECKED BY		DATE		REVISED		DATE	

COMMONWEALTH OF KENTUCKY
DEPARTMENT OF HIGHWAYS
FRANKFORT
COUNTY OF
JEFFERSON
I64-13TH ST. TO 7TH ST.
LOUISVILLE – LEXINGTON
ROAD SP 56-273-11L
STATION 208+08 **PROJECT NO.** I64-2(35)3

BRIDGE NUMBER	DRAWING NO.	INDEX
	18572	

STRINGERS
STRUCTURAL STEEL

FED. ROAD DIST.	STATE	FED. AID PRO. NO.	FISCAL YEAR	SHEET NO.	TOTAL SHEETS
7	KY.				

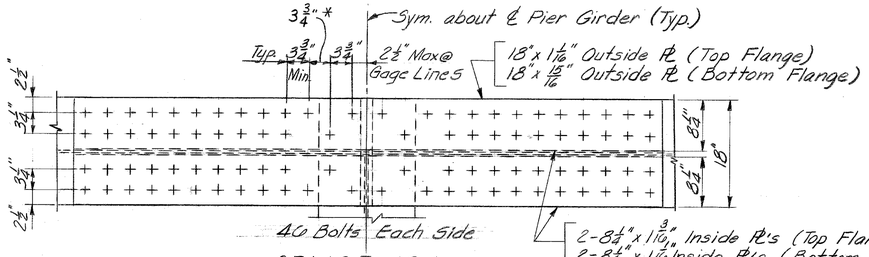

SPLICE 18A

(Top Flange Splice Shown, Bottom Similar)

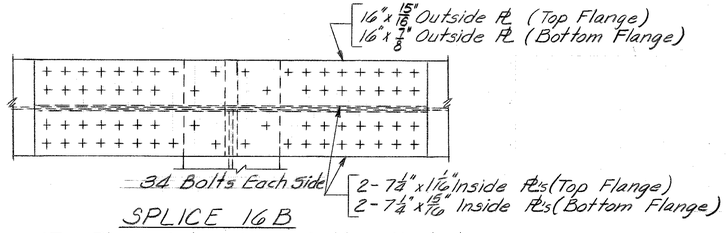

SPLICE 16B

(Top Flange Splice Shown, Bottom Similar)

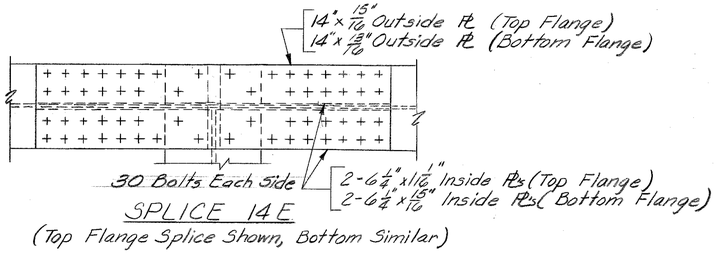

SPLICE 14E

(Top Flange Splice Shown, Bottom Similar)

FASCIA & MEDIAN STRINGER FLANGE SPLICES

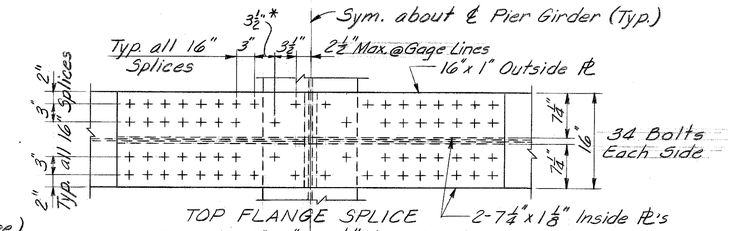

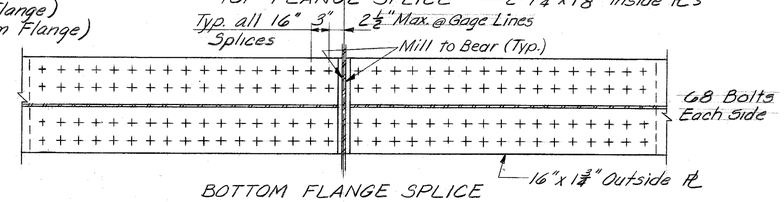

SPLICE 16A

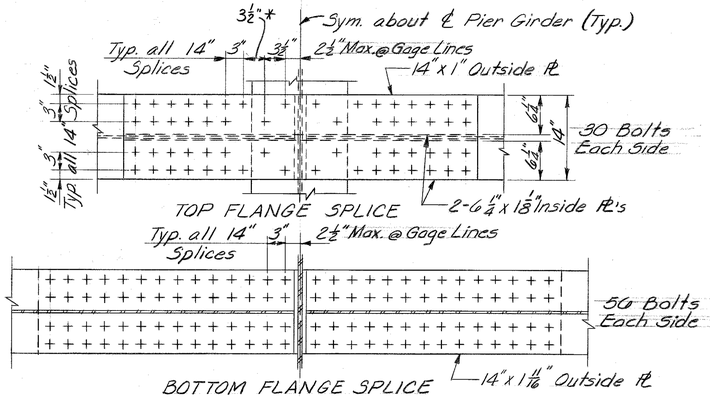

SPLICE 14A

INTERIOR STRINGER FLANGE SPLICES

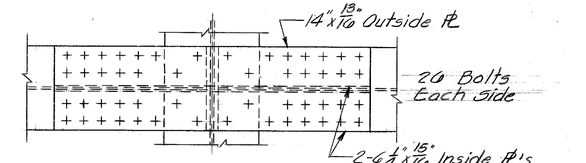

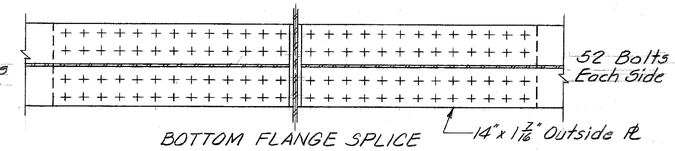

SPLICE 14B

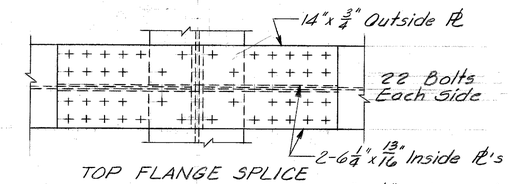

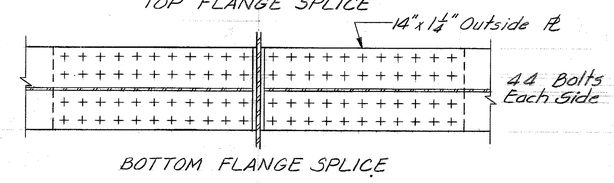

SPLICE 14C

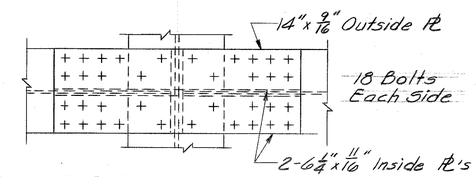

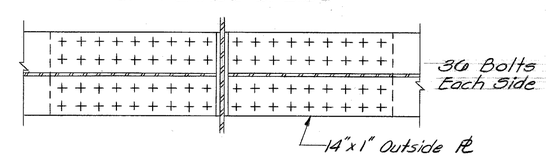

SPLICE 14D

* Minimum. May be increased for bolt clearance due to ϕ angle.

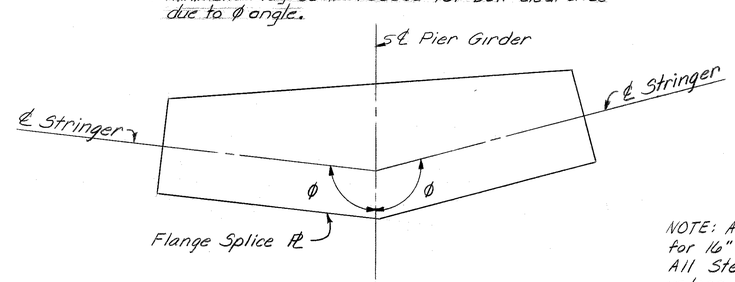

NOTE: All Splices are detailed for 16" Pier Girder flanges. All Steel this sheet ASTM A36 unless noted.

NOTE: All Splices are shown with ϕ = 90°. For actual values of ϕ, See tables sheet A84

TABLE OF FLANGE SPLICES

Unit VII E.B.			Unit VIII E.B.				Unit VIII W.B.			
Str.	Pier 46	Pier 47	Str.	Pier 49	Pier 50	Pier 51	Str.	Pier 49	Pier 50	Pier 51
S2	16B	16A	S2	18A	14E	18A	S1	18A	14E	18A
S4	14C	14C	S4	16A	14C	16A	S3	16A	14C	16A
S6	14C	14C	S6	16A	14C	16A	S5	16A	14C	16A
S8	14C	14C	S8	16A	14C	16A	S7	16A	14B	16A
S10	14B	14B	S10	16A	14C	16A	S9	16A	14B	16A
S12	14D	X	S12	16A	14C	16A	S11	16A	14B	16A
S14	14B	14B	S14	18A	14E	18A	S13	16A	14B	16A
S16	14B	14B					S15	14A	14D	X
S18	16B	16B					S17	X	X	X
							S19	16B	14E	16B

STRINGERS
STRUCTURAL STEEL

SHEET A140

COMMONWEALTH OF KENTUCKY
DEPARTMENT OF HIGHWAYS
FRANKFORT
COUNTY OF
JEFFERSON
I64-13TH ST. TO 7TH ST.
LOUISVILLE – LEXINGTON ROAD
STATION 208+08
SP 56-273-11L
PROJECT NO. I 64-2(35)3
BRIDGE NUMBER
DRAWING NO. 18572
INDEX

DESIGNED BY: EB
DETAILED BY: DMA
TRACED BY:
CHECKED BY: PME
CHECKED BY: B. Clark
CHECKED BY:
DATE: 7-70
DATE: 10-70
REVISED:

FED. ROAD DIST.	STATE	FED. AID PROJ. NO.	FISCAL YEAR	SHEET NO.	TOTAL SHEETS
7	KY.				

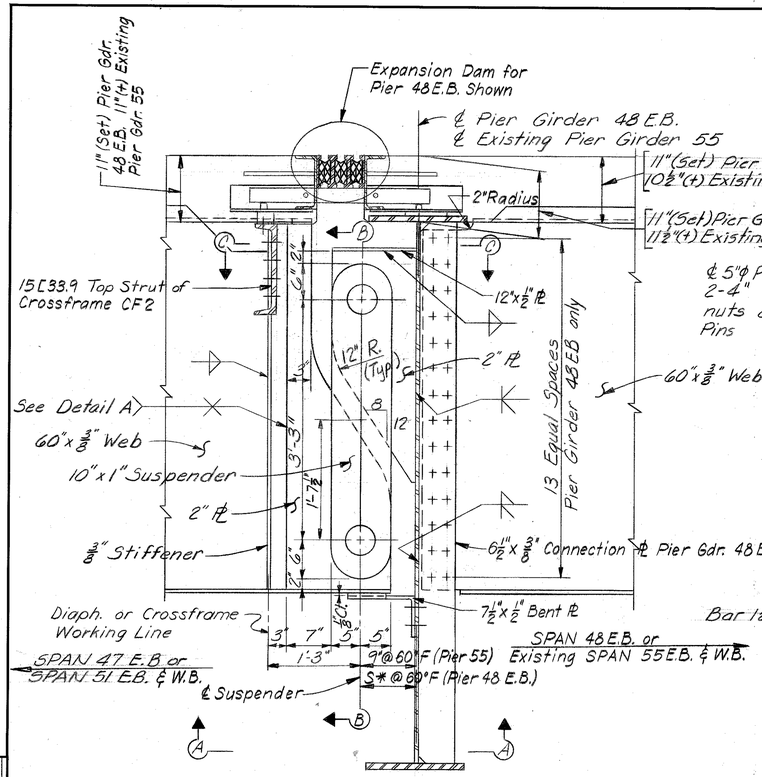

INTERIOR STRINGER HANGER

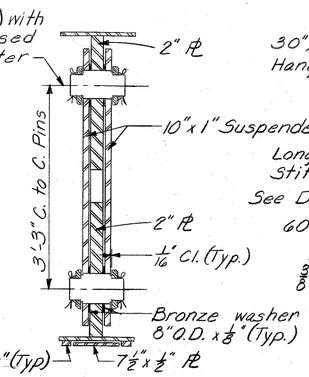

SECTION B-B

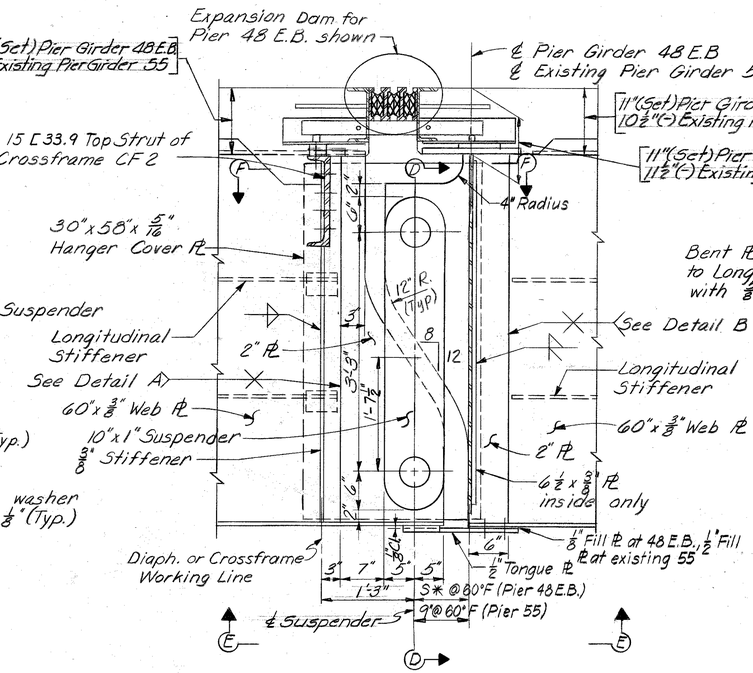

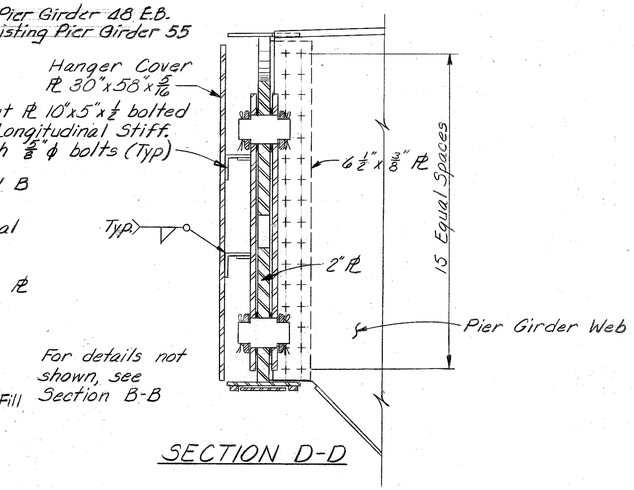

SECTION D-D

FASCIA STRINGER HANGER

Median Stringer Hanger Similar except for Longitudinal Stiffeners and Hanger Cover PL.

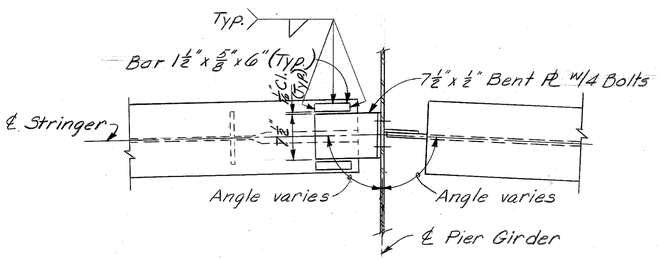

SECTION A-A

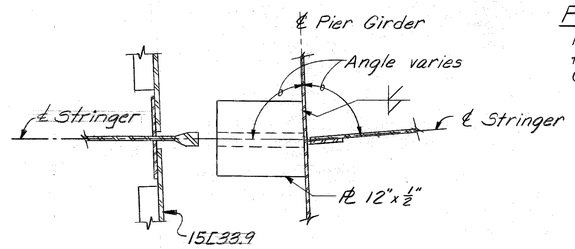

SECTION C-C

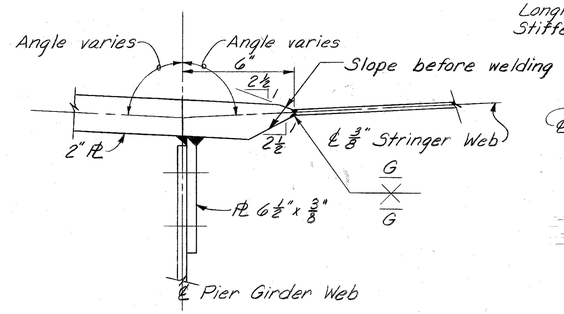

DETAIL B

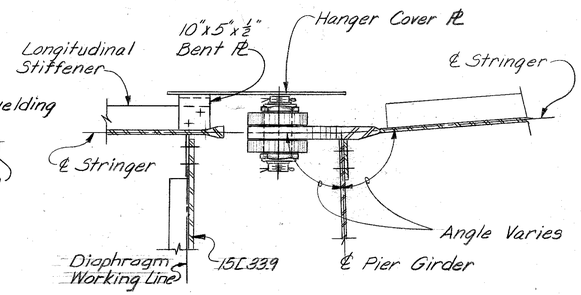

SECTION F-F

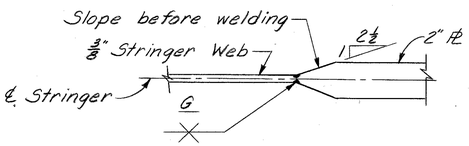

DETAIL A

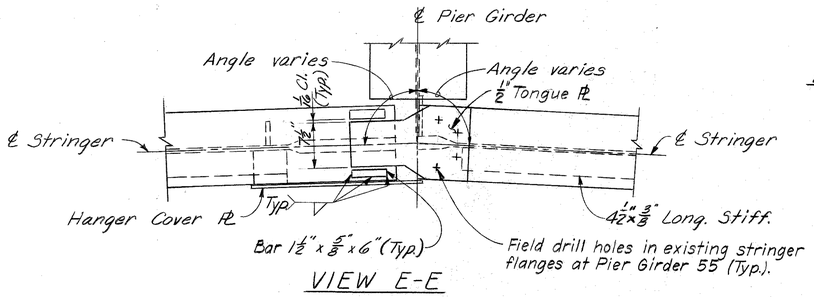

VIEW E-E

NOTE

7½"x½" Bent PL's, ½" Tongue PL's, Hanger Cover PL's, Suspender PL's and Pins for Hangers are to be furnished for Pier Girder 55. Contractor shall check dimensions of existing Pier Girder 55 and shall check diameter of existing Pin Holes and turn Pins to 1/32" less diameter.

All Steel this sheet ASTM A36 unless noted

For Details of Expansion Dam see Sheet B46

* See Framing Plan for Dimension "S"

STRINGERS
STRUCTURAL STEEL

SHEET A141

COMMONWEALTH OF KENTUCKY
DEPARTMENT OF HIGHWAYS
FRANKFORT
COUNTY OF
JEFFERSON

I64-13TH ST. TO 7TH ST.
LOUISVILLE — LEXINGTON ROAD

STATION 208+08 PROJECT NO. I64-2(35)3 SP 56-273-11L

BRIDGE NUMBER	DRAWING NO.	INDEX
	18572	

DESIGNED BY EB	CHECKED BY PME	DATE 7-70	REVISED DATE
DETAILED BY GMA	CHECKED BY RLL	DATE 10-70	REVISED DATE
TRACED BY	CHECKED BY	DATE	REVISED DATE

FED. ROAD DIST.	STATE	FED. AID PRO. NO.	FISCAL YEAR	SHEET NO.	TOTAL SHEETS
7	KY.				

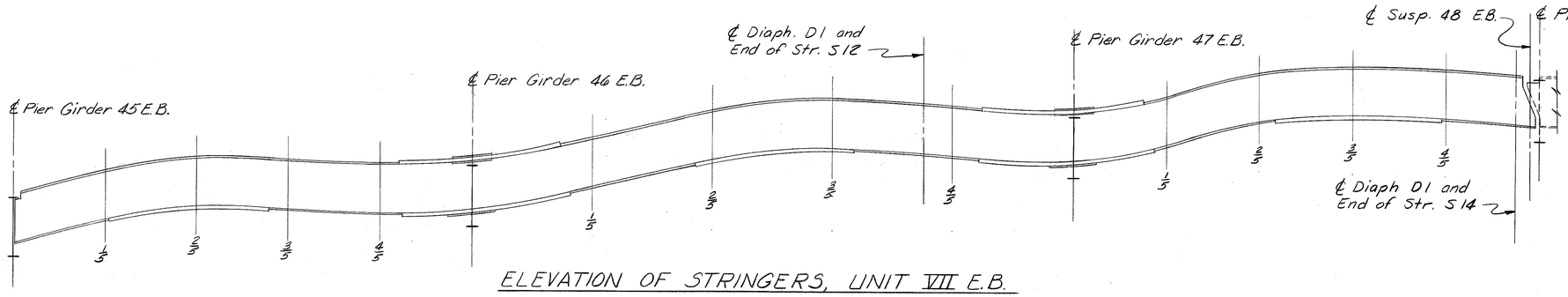

ELEVATION OF STRINGERS, UNIT VII E.B.

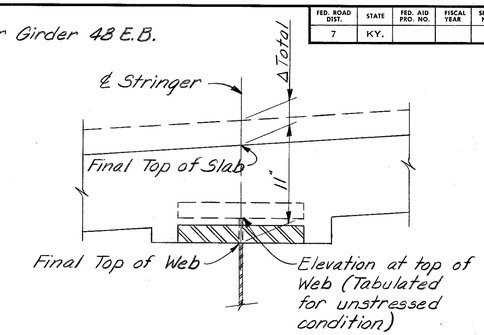

SECTION THRU STRINGER

Str.	Location →	℄ P.G. 45EB	1/5	2/5	3/5	4/5	℄ P.G. 46EB	1/5	2/5	3/5	4/5	℄ P.G. 47EB.	1/5	2/5	3/5	4/5	℄ Susp. 48
		SPAN 45 E.B.					SPAN 46 E.B.					SPAN 47 E.B.					
S2	Elev. top of Str. Web	475.865	476.044	476.201	476.321	476.411	476.502	476.569	476.640	476.686	476.707	476.733	476.725	476.717	476.678	476.597	476.481
	Δ Total	0.006	0.053	0.073	0.060	0.026	0.000	0.000	0.015	0.015	0.001	0.002	0.026	0.057	0.069	0.047	-0.003
	Δ Stl.	0.001	0.007	0.009	0.008	0.003	0.000	0.000	0.002	0.002	0.000	0.000	0.003	0.007	0.009	0.006	0.000
S4	Elev. top of Str. Web	476.359	476.532	476.689	476.813	476.909	477.002	477.071	477.140	477.189	477.213	477.238	477.228	477.214	477.174	477.095	476.985
	Δ Total	0.000	0.043	0.061	0.052	0.023	0.001	0.003	0.016	0.017	0.006	0.007	0.028	0.056	0.065	0.045	0.001
	Δ Stl.	0.000	0.006	0.008	0.007	0.003	0.000	0.000	0.002	0.002	0.001	0.001	0.004	0.007	0.008	0.006	0.000
S6	Elev. top of Str. Web	476.858	477.032	477.189	477.313	477.410	477.503	477.571	477.641	477.688	477.711	477.736	477.728	477.716	477.677	477.601	477.493
	Δ Total	-0.001	0.042	0.062	0.052	0.025	0.003	0.004	0.016	0.017	0.005	0.005	0.028	0.058	0.069	0.051	0.009
	Δ Stl.	0.000	0.005	0.008	0.007	0.003	0.000	0.000	0.002	0.002	0.001	0.001	0.004	0.008	0.009	0.007	0.001
S8	Elev. top of Str. Web	477.358	477.532	477.689	477.812	477.908	478.002	478.069	478.137	478.184	478.206	478.232	478.224	478.214	478.177	478.102	477.996
	Δ Total	0.000	0.043	0.061	0.052	0.023	0.001	0.001	0.014	0.013	0.001	0.000	0.025	0.056	0.069	0.053	0.013
	Δ Stl.	0.000	0.006	0.008	0.007	0.003	0.000	0.000	0.002	0.002	0.000	0.000	0.003	0.007	0.009	0.007	0.002
S10	Elev. top of Str. Web	477.859	478.030	478.185	478.308	478.405	478.501	478.572	478.647	478.699	478.718	478.732	478.711	478.692	478.653	478.586	478.493
	Δ Total	0.000	0.041	0.059	0.048	0.020	0.000	0.005	0.024	0.028	0.013	0.002	0.013	0.035	0.046	0.037	0.010
	Δ Stl.	0.000	0.005	0.008	0.006	0.003	0.000	0.001	0.003	0.004	0.002	0.000	0.002	0.004	0.006	0.005	0.001
S12	Elev. top of Str. Web	477.842	478.078	478.295	478.519	478.697	478.888	478.940	478.944	478.966	478.978*	—	—	—	—	—	—
	Δ Total	0.000	0.050	0.072	0.063	0.031	0.003	0.002	0.017	0.023	0.019*	—	—	—	—	—	—
	Δ Stl.	0.000	0.006	0.009	0.008	0.004	0.000	0.000	0.002	0.003	0.002*	—	—	—	—	—	—
S14	Elev. top of Str. Web	477.998	478.264	478.518	478.796	479.019	479.213	479.264	479.278	479.266	479.235	479.183	479.122	479.062	478.984	478.877	478.752*
	Δ Total	0.002	0.043	0.061	0.050	0.022	0.003	0.007	0.026	0.030	0.015	0.003	0.014	0.034	0.044	0.034	0.007*
	Δ Stl.	0.000	0.006	0.008	0.007	0.003	0.000	0.001	0.003	0.004	0.002	0.000	0.002	0.004	0.006	0.004	0.001*
S16	Elev. top of Str. Web	478.297	478.632	478.926	479.202	479.424	479.616	479.697	479.743	479.748	479.722	479.681	479.579	479.475	479.347	479.185	478.995
	Δ Total	0.004	0.046	0.064	0.053	0.024	0.000	0.001	0.013	0.014	0.001	0.001	0.021	0.046	0.055	0.038	0.003
	Δ Stl.	0.001	0.006	0.008	0.007	0.003	0.000	0.000	0.002	0.002	0.000	0.000	0.003	0.006	0.007	0.005	0.000
S18	Elev. top of Str. Web	478.589	479.008	479.352	479.624	479.836	480.022	480.136	480.220	480.249	480.220	480.179	480.087	479.996	479.873	479.701	479.488
	Δ Total	0.000	0.059	0.084	0.070	0.031	0.002	0.001	0.017	0.017	0.000	0.000	0.029	0.067	0.081	0.055	-0.004
	Δ Stl.	0.000	0.008	0.011	0.009	0.004	0.000	0.000	0.002	0.002	0.000	0.000	0.004	0.009	0.010	0.007	-0.001

*Elevations and Δ's at ℄ Diaph. D1

NOTE: All deflections are shown in feet. Elevations given are for the unstressed condition with the Stringers on the Pier Girders. Elevations contain the camber for total dead load for both Stringers and Pier Girders. All Stringers and Pier Girders must be cambered in the unstressed condition. Should the theoretical final elevation at top of Stringer Web be desired, subtract Δ total from the elevation given.

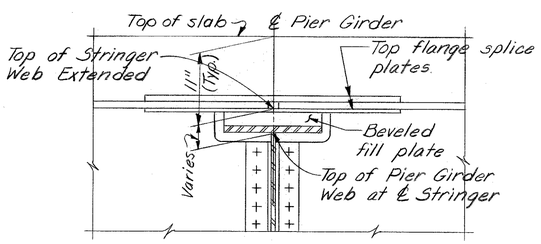

SECTION THRU PIER GIRDER AT STRINGER

NOTE: To obtain elevations of top of Pier Girder Webs at ℄ Stringers for the unstressed condition, read values of "Elev. of top of Str. Web" vertically under "℄ Pier Girder" and subtract the distance from top of Stringer Web to top of Pier Girder Web shown on Pier Girder details Sheets

STRINGER CAMBER
STRUCTURAL STEEL

SHEET A142

COMMONWEALTH OF KENTUCKY
DEPARTMENT OF HIGHWAYS
FRANKFORT
COUNTY OF
JEFFERSON
I64-13TH ST. TO 7TH ST.
LOUISVILLE – LEXINGTON ROAD
SP 56-273-11L
STATION 208+08
PROJECT NO. I64-2(35)3

BRIDGE NUMBER	DRAWING NO.	INDEX
	18572	

DESIGNED BY JMB & PWE CHECKED BY EB DATE 12/18/72 REVISED
DETAILED BY G.V.A. & JMB CHECKED BY EB DATE 12/18/72 REVISED
TRACED BY CHECKED BY DATE REVISED

FED. ROAD DIST.	STATE	FED. AID PRO. NO.	FISCAL YEAR	SHEET NO.	TOTAL SHEETS
7	KY.				

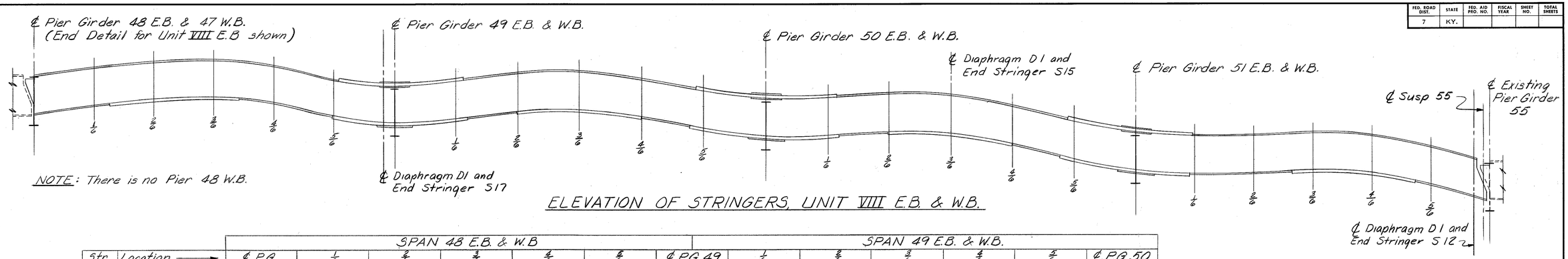

ELEVATION OF STRINGERS, UNIT VIII E.B. & W.B.

	Str.	Location →	SPAN 48 E.B. & W.B. ℄ P.G.	1/6	2/6	3/6	4/6	5/6	℄ P.G. 49	SPAN 49 E.B. & W.B. 1/6	2/6	3/6	4/6	5/6	℄ P.G. 50
UNIT VIII E.B.	S2	Elev. top of Str. Web	476.478	476.426	476.331	476.183	475.981	475.754	475.531	475.301	475.068	474.819	474.536	474.224	473.904
		Δ Total	-0.003	0.078	0.125	0.129	0.089	0.035	-0.006	-0.012	-0.002	0.011	0.010	0.000	-0.006
		Δ Stl.	0.000	0.011	0.018	0.018	0.013	0.005	-0.001	-0.002	0.000	0.002	0.001	0.000	-0.001
	S4	Elev. top of Str. Web	476.981	476.923	476.823	476.675	476.478	476.258	476.045	475.792	475.541	475.271	474.964	474.625	474.280
		Δ Total	0.001	0.075	0.119	0.123	0.087	0.040	0.007	0.002	0.016	0.033	0.031	0.016	0.007
		Δ Stl.	0.000	0.011	0.017	0.017	0.012	0.006	0.001	0.000	0.002	0.005	0.004	0.002	0.001
	S6	Elev. top of Str. Web	477.489	477.430	477.332	477.185	476.988	476.769	476.554	476.279	476.005	475.713	475.384	475.021	474.651
		Δ Total	0.009	0.084	0.128	0.132	0.097	0.051	0.018	0.013	0.026	0.043	0.041	0.026	0.016
		Δ Stl.	0.001	0.012	0.018	0.019	0.014	0.007	0.003	0.002	0.004	0.006	0.006	0.004	0.002
	S8	Elev. top of Str. Web	477.993	477.934	477.835	477.687	477.490	477.272	477.057	476.759	476.461	476.146	475.794	475.408	475.016
		Δ Total	0.014	0.088	0.131	0.135	0.100	0.053	0.021	0.015	0.029	0.045	0.043	0.028	0.018
		Δ Stl.	0.002	0.012	0.018	0.019	0.014	0.007	0.003	0.002	0.004	0.006	0.006	0.004	0.003
	S10	Elev. top of Str. Web	478.490	478.427	478.325	478.177	477.981	477.763	477.550	477.229	476.907	476.567	476.193	475.786	475.372
		Δ Total	0.010	0.081	0.122	0.126	0.091	0.045	0.013	0.008	0.021	0.035	0.034	0.020	0.011
		Δ Stl.	0.002	0.011	0.017	0.018	0.013	0.006	0.002	0.001	0.003	0.005	0.005	0.003	0.002
	S12	Elev. top of Str. Web	478.988	478.904	478.782	478.615	478.402	478.169	477.939	477.594	477.244	476.879	476.480	476.053	475.618
		Δ Total	0.003	0.070	0.108	0.111	0.078	0.034	0.003	-0.001	0.010	0.023	0.022	0.010	0.003
		Δ Stl.	0.000	0.010	0.015	0.016	0.011	0.005	0.000	0.000	0.001	0.003	0.003	0.001	0.000
	S14	Elev. top of Str. Web	479.481	479.384	479.249	479.065	478.834	478.580	478.329	477.957	477.585	477.196	476.773	476.321	475.863
		Δ Total	-0.004	0.067	0.109	0.112	0.077	0.029	-0.008	-0.012	0.002	0.017	0.015	0.002	-0.006
		Δ Stl.	-0.001	0.009	0.015	0.016	0.011	0.004	-0.001	-0.002	0.000	0.002	0.002	0.000	-0.001
UNIT VIII W.B.	S1	Elev. top of Str. Web	476.418	476.381	476.301	476.167	475.979	475.767	475.559	475.318	475.091	474.857	474.590	474.275	473.948
		Δ Total	0.003	0.084	0.131	0.136	0.096	0.041	0.000	-0.006	0.012	0.031	0.028	0.011	0.000
		Δ Stl.	0.000	0.012	0.018	0.019	0.013	0.006	0.000	-0.001	0.002	0.004	0.004	0.002	0.000
	S3	Elev. top of Str. Web	475.957	475.901	475.810	475.674	475.495	475.295	475.105	474.863	474.635	474.399	474.133	473.833	473.530
		Δ Total	-0.001	0.063	0.100	0.102	0.070	0.029	0.001	0.000	0.016	0.033	0.030	0.013	0.001
		Δ Stl.	0.000	0.009	0.014	0.014	0.010	0.004	0.000	0.000	0.002	0.005	0.004	0.002	0.000
	S5	Elev. top of Str. Web	475.498	475.444	475.353	475.217	475.038	474.839	474.653	474.405	474.178	473.941	473.675	473.391	473.111
		Δ Total	-0.001	0.063	0.100	0.103	0.071	0.030	0.003	0.002	0.018	0.035	0.032	0.015	0.003
		Δ Stl.	0.000	0.009	0.014	0.014	0.010	0.004	0.000	0.000	0.002	0.005	0.004	0.002	0.000
	S7	Elev. top of Str. Web	475.039	474.973	474.875	474.740	474.566	474.373	474.197	473.947	473.721	473.481	473.213	472.946	472.689
		Δ Total	-0.001	0.051	0.082	0.084	0.059	0.024	0.001	0.003	0.020	0.034	0.030	0.013	0.002
		Δ Stl.	0.000	0.007	0.011	0.012	0.008	0.003	0.000	0.000	0.003	0.005	0.004	0.002	0.000
	S9	Elev. top of Str. Web	474.548	474.481	474.384	474.248	474.073	473.880	473.709	473.451	473.225	472.986	472.718	472.467	472.235
		Δ Total	0.002	0.053	0.083	0.085	0.059	0.024	0.001	0.003	0.020	0.033	0.028	0.012	0.000
		Δ Stl.	0.000	0.007	0.011	0.012	0.008	0.003	0.000	0.000	0.003	0.005	0.004	0.002	0.000
	S11	Elev. top of Str. Web	474.918	474.723	474.483	474.204	473.899	473.598	473.343	472.989	472.736	472.495	472.225	471.991	471.783
		Δ Total	0.004	0.056	0.087	0.090	0.064	0.030	0.008	0.009	0.024	0.037	0.031	0.013	0.000
		Δ Stl.	0.001	0.008	0.012	0.013	0.009	0.004	0.001	0.001	0.003	0.005	0.004	0.002	0.000
	S13	Elev. top of Str. Web	475.556	475.117	474.607	474.122	473.662	473.251	472.936	472.508	472.234	471.994	471.725	471.510	471.331
		Δ Total	0.001	0.064	0.098	0.102	0.074	0.036	0.010	0.005	0.018	0.031	0.025	0.009	-0.001
		Δ Stl.	0.000	0.009	0.014	0.014	0.010	0.005	0.001	0.001	0.003	0.004	0.004	0.001	0.000
	S15	Elev. top of Str. Web	475.301	474.755	474.204	473.684	473.199	472.768	472.464	472.069	471.823	471.619	471.378	471.194	471.041
		Δ Total	0.002	0.048	0.072	0.071	0.047	0.019	0.004	0.014	0.040	0.061	0.055	0.029	0.002
		Δ Stl.	0.000	0.007	0.010	0.010	0.007	0.003	0.001	0.002	0.006	0.008	0.008	0.004	0.000
	S17	Elev. top of Str. Web	475.034	474.537	474.004	473.500	473.028	472.588	472.303 *						
		Δ Total	0.003	0.076	0.119	0.134	0.119	0.074	0.013 *						
		Δ Stl.	0.000	0.011	0.017	0.019	0.017	0.010	0.002 *						
	S19	Elev. top of Str. Web	474.738	474.258	473.714	473.201	472.720	472.298	472.025	471.638	471.405	471.226	471.007	470.859	470.753
		Δ Total	0.000	0.062	0.095	0.095	0.063	0.023	-0.002	0.005	0.033	0.056	0.050	0.025	0.006
		Δ Stl.	0.000	0.009	0.013	0.013	0.009	0.003	0.000	0.001	0.005	0.008	0.007	0.003	0.001

*Elevations and deflections shown are at Diaphragm D1

STRINGER CAMBER
STRUCTURAL STEEL SHEET A143

COMMONWEALTH OF KENTUCKY
DEPARTMENT OF HIGHWAYS
FRANKFORT
COUNTY OF
JEFFERSON

I64-13TH ST. TO 7TH ST.
LOUISVILLE — LEXINGTON
ROAD SP 56-273-IIL

STATION 208+08 **PROJECT NO.** I64-2(35)3

BRIDGE NUMBER | DRAWING NO. 18572 | INDEX

DESIGNED BY JMB & PME CHECKED BY EB DATE 10-23-73 REVISED DATE
DETAILED BY CMA & JMB CHECKED BY EB DATE 11-10-73 REVISED DATE
TRACED BY CHECKED BY DATE REVISED DATE

FED. ROAD DIST.	STATE	FED. AID PROJ. NO.	FISCAL YEAR	SHEET NO.	TOTAL SHEETS
7	KY.				

	Str.	Location →	SPAN 50 E.B. & W.B.							SPAN 51 E.B. & W.B.					
			℄ P.G.50	1/6	2/6	3/6	4/6	5/6	℄ P.G.51	1/6	2/6	3/6	4/6	5/6	℄ Susp.55**
UNIT VIII E.B.	S2	Elev. top of Str. Web	473.904	473.598	473.297	472.985	472.658	472.332	472.022	471.733	471.455	471.168	470.854	470.512	470.148
		Δ Total	-0.006	0.002	0.014	0.016	0.003	-0.010	-0.007	0.018	0.053	0.079	0.078	0.049	-0.002
		Δ Stl.	-0.001	0.000	0.002	0.002	0.000	-0.001	-0.001	0.003	0.007	0.011	0.011	0.007	0.000
	S4	Elev. top of Str. Web	474.280	473.955	473.635	473.301	472.947	472.595	472.261	474.952	471.659	471.354	471.014	470.636	470.230
		Δ Total	0.007	0.019	0.035	0.038	0.021	0.005	0.007	0.037	0.080	0.114	0.111	0.071	0.003
		Δ Stl.	0.001	0.003	0.005	0.005	0.003	0.001	0.001	0.005	0.010	0.016	0.016	0.010	0.000
	S6	Elev. top of Str. Web	474.651	474.304	473.962	476.605	473.228	472.854	472.496	472.162	471.843	471.514	471.148	470.744	470.314
		Δ Total	0.016	0.028	0.045	0.048	0.031	0.015	0.018	0.046	0.089	0.121	0.117	0.076	0.007
		Δ Stl.	0.002	0.004	0.006	0.007	0.004	0.002	0.002	0.006	0.012	0.017	0.016	0.011	0.001
	S8	Elev. top of Str. Web	475.016	474.646	474.281	473.900	473.501	473.103	472.723	472.366	472.024	471.671	471.281	470.855	470.401
		Δ Total	0.018	0.030	0.047	0.050	0.033	0.017	0.019	0.047	0.090	0.122	0.118	0.077	0.007
		Δ Stl.	0.003	0.004	0.007	0.007	0.005	0.002	0.003	0.007	0.013	0.017	0.017	0.011	0.001
	S10	Elev. top of Str. Web	475.372	474.976	474.586	474.183	473.763	473.344	472.941	472.557	472.185	471.801	471.396	470.956	470.494
		Δ Total	0.011	0.021	0.036	0.038	0.023	0.009	0.011	0.034	0.069	0.092	0.092	0.059	0.003
		Δ Stl.	0.002	0.003	0.005	0.005	0.003	0.001	0.002	0.005	0.010	0.013	0.013	0.008	0.000
	S12	Elev. top of Str. Web	475.618	475.199	474.785	474.361	473.925	473.490	473.068	472.664	472.269	471.863	471.447	471.003	470.577*
		Δ Total	0.003	0.011	0.023	0.025	0.013	0.001	0.003	0.021	0.049	0.062	0.068	0.043	0.003*
		Δ Stl.	0.000	0.002	0.003	0.004	0.002	0.000	0.000	0.003	0.007	0.009	0.010	0.006	0.000*
	S14	Elev. top of Str. Web	475.863	475.425	474.992	474.550	474.091	473.633	473.195	472.785	472.387	471.980	471.543	471.078	470.590
		Δ Total	-0.006	0.004	0.019	0.022	0.007	-0.008	-0.006	0.023	0.062	0.090	0.088	0.054	-0.003
		Δ Stl.	-0.001	0.001	0.003	0.003	0.001	-0.001	-0.001	0.003	0.009	0.013	0.012	0.008	0.000
UNIT VIII W.B.	S1	Elev. top of Str. Web	473.948	473.645	473.348	473.036	472.701	472.365	472.053	471.774	471.507	471.229	470.909	470.550	470.160
		Δ Total	0.000	0.013	0.032	0.036	0.017	-0.003	0.001	0.036	0.085	0.121	0.117	0.073	-0.003
		Δ Stl.	0.000	0.002	0.004	0.005	0.002	0.000	0.000	0.005	0.012	0.017	0.016	0.010	0.000
	S3	Elev. top of Str. Web	473.530	473.247	472.971	472.681	472.371	472.063	471.773	471.511	471.261	471.002	470.706	470.374	469.996
		Δ Total	0.001	0.012	0.028	0.030	0.014	-0.001	0.001	0.032	0.078	0.112	0.110	0.071	0.003
		Δ Stl.	0.000	0.002	0.004	0.004	0.002	0.000	0.000	0.004	0.011	0.016	0.015	0.010	0.000
	S5	Elev. top of Str. Web	473.111	472.852	472.599	472.333	472.047	471.762	471.495	471.254	471.028	470.791	470.518	470.216	469.834
		Δ Total	0.003	0.014	0.030	0.032	0.016	0.001	0.003	0.034	0.080	0.115	0.114	0.075	0.009
		Δ Stl.	0.000	0.002	0.004	0.005	0.002	0.000	0.000	0.005	0.011	0.016	0.016	0.011	0.001
	S7	Elev. top of Str. Web	472.689	472.452	472.220	471.977	471.718	471.457	471.214	470.996	470.792	470.575	470.322	470.037	469.676
		Δ Total	0.002	0.010	0.025	0.028	0.014	-0.001	0.001	0.033	0.077	0.110	0.107	0.072	0.011
		Δ Stl.	0.000	0.001	0.003	0.004	0.002	0.000	0.000	0.005	0.011	0.015	0.015	0.010	0.001
	S9	Elev. top of Str. Web	472.235	472.023	471.817	471.600	471.366	471.131	470.912	470.721	470.542	470.351	470.125	469.865	469.512
		Δ Total	0.000	0.008	0.023	0.026	0.013	-0.003	0.000	0.031	0.076	0.109	0.105	0.070	0.008
		Δ Stl.	0.000	0.001	0.003	0.004	0.002	0.000	0.000	0.004	0.011	0.015	0.015	0.010	0.001
	S11	Elev. top of Str. Web	471.783	471.596	471.415	471.224	471.014	470.804	470.611	470.446	470.294	470.129	469.929	469.697	469.351
		Δ Total	0.000	0.008	0.023	0.026	0.012	-0.003	-0.001	0.030	0.073	0.105	0.101	0.065	0.002
		Δ Stl.	0.000	0.001	0.003	0.004	0.002	0.000	0.000	0.004	0.011	0.015	0.014	0.009	0.000
	S13	Elev. top of Str. Web	471.331	471.175	471.026	470.865	470.680	470.491	470.312	470.178	470.054	469.922	469.761	469.571	469.261
		Δ Total	-0.001	0.014	0.035	0.044	0.029	0.009	0.001	0.016	0.045	0.070	0.070	0.045	-0.001
		Δ Stl.	0.000	0.002	0.005	0.006	0.004	0.001	0.000	0.002	0.006	0.010	0.010	0.006	0.000
	S15	Elev. top of Str. Web	471.041	470.919	470.804	470.686*									
		Δ Total	0.002	0.008	0.024	0.041*									
		Δ Stl.	0.000	0.001	0.003	0.006*									
	S19	Elev. top of Str. Web	470.753	470.670	470.591	470.495	470.370	470.240	470.123	470.036	469.957	469.861	469.717	469.525	469.190
		Δ Total	0.006	0.014	0.032	0.038	0.022	0.004	0.007	0.042	0.092	0.130	0.125	0.077	-0.004
		Δ Stl	0.001	0.002	0.005	0.005	0.003	0.001	0.001	0.006	0.013	0.018	0.017	0.011	-0.001

**Deflections shown are expected deflections of existing Pier Girder 55 caused by Span 51 steel and/or concrete.
* Elevations and deflections shown are at Diaphragm D1.

SHEET A144

STRINGER CAMBER
STRUCTURAL STEEL

DESIGNED BY PME & JMB CHECKED BY EB DATE 10-4-78 REVISED DATE
DETAILED BY GMA & JMB CHECKED BY EB DATE 11-3-78 REVISED DATE
TRACED BY CHECKED BY DATE REVISED DATE

COMMONWEALTH OF KENTUCKY
DEPARTMENT OF HIGHWAYS
FRANKFORT
COUNTY OF
JEFFERSON

I64-13TH ST TO 7TH ST
LOUISVILLE — LEXINGTON
ROAD

STATION 208+08 PROJECT NO. I64-2(35)3 SP 56-273-11L

BRIDGE NUMBER | DRAWING NO. 18572 | INDEX

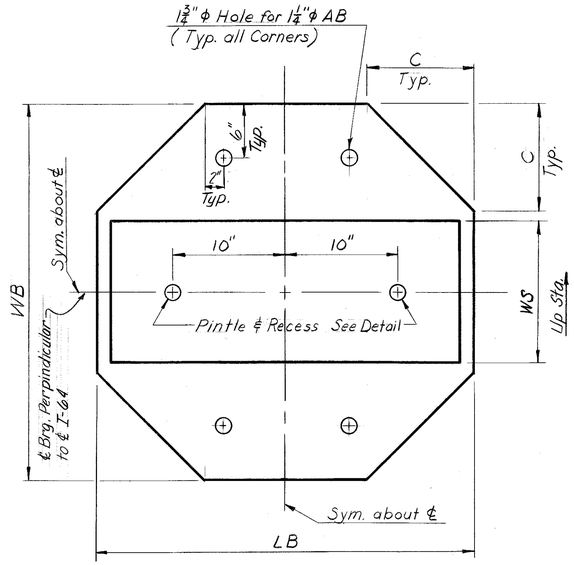

PLAN OF MASONRY PLATE

BEARING TYPE ⑪ & ⑫											
TABLE OF DIMENSIONS IN INCHES											
Type	C	A	R	LB	WB	TC	TS	WS	React.(Kips)	Wgt.(Lbs)	Location
⑪	12	3½	18	42	42	2⅝	2⅞	16	1181	2853.1	35E-G2 & G4
⑫	14	5	24	48	48	3¼	3⅛	16	1563	4481.5	32W-3

Note:
All material A36 unless noted.

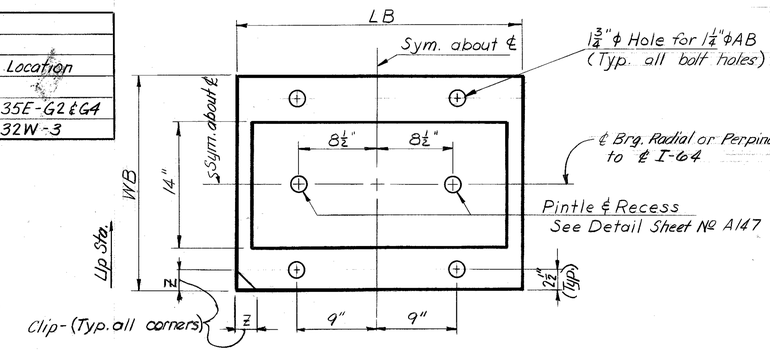

PLAN OF MASONRY PLATE

TABLE OF MASONRY PLATE CORNER DIMENSIONS

TYPE	DIMENSION Z (In Inches)
3,5,7 & 9	3"
4	6"
All Others	0

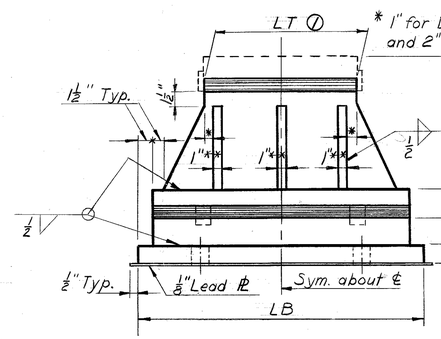

FRONT ELEVATION

Note: All Material A36 Unless Noted
** Use 1½" for 28E-G2 & G4 and 41W-G1 & G3.

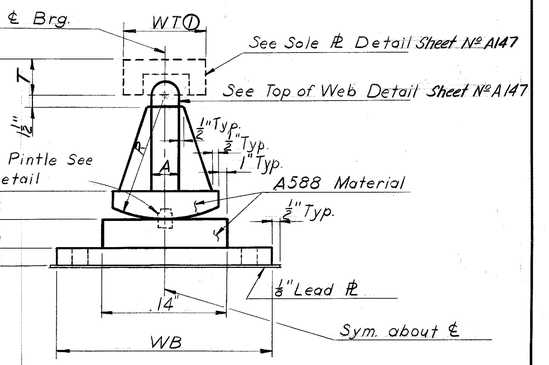

END ELEVATION

TYPE ① thru ⑩ BEARINGS

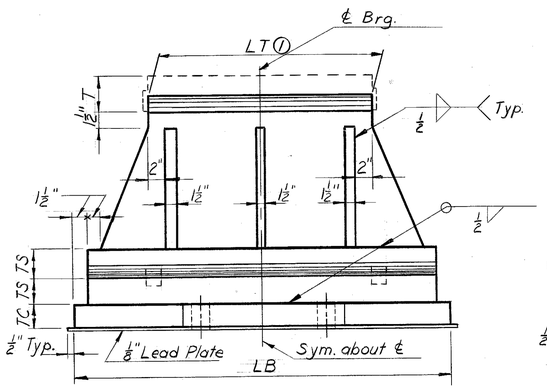

FRONT ELEVATION

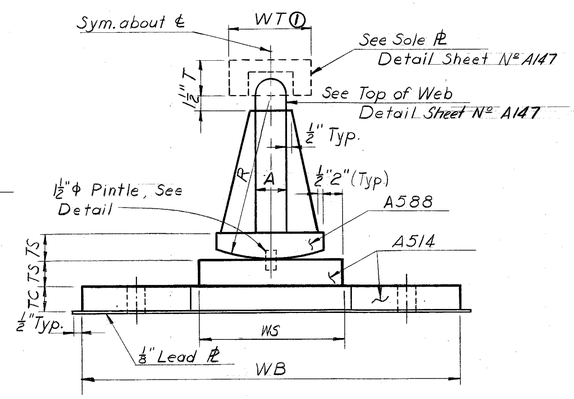

END ELEVATION

TYPE ⑪ & ⑫ BEARINGS

All anchor bolts are 1¼" ϕ. See Sheet № A147 for detail.
For "NOTES" See Sheet № A147.
① This dimension is not constant for any one type Bearing. For length See Sheet № A147.

BEARING TYPE ① thru ⑩									
Type	A	R	LB	WB	TC	TS	React. (kips)*	Wgt. Lbs*	Location
①	3	14	32	24	2	3	608	1496.7	28E-G2&G4; 31E-G4; 36E-G4; 40E-G2&G4; 42E-G2&G4; 43W-G1&G3; 44W-G1&G3; 46W-G1&G3
②	3	14	34	26	2⅜	3¼	711	1849.8	26E&W-G1,G2,G3,G4; 28W-G1&G3; 29E-G4; 36E&W-G1,G2,G3,G6; 38E-G2,G4,G6; 41W-G1&G3
③	3	14	36	28	2¾	3¼	819	2179.4	29E&W-G1,G2; 38W-G3; 40W-G3; 44E-G2&G4; 46E-2, 4, 6; 49W-1&5; 51E&W-1, 2, 3.4, 5
④	3	14	38	30	3⅛	3¼	847	2315.3	29W-G3; 38W-G1; 40W-G1
⑤	3½	14	36	28	2¾	3¼	822	2223.2	31W-G3; 48E-2&4
⑥	3½	14	38	30	3	3½	904	2546.5	49E-2&4
⑦	3½	14	40	32	3½	3½	962	2760.8	32W-G1
⑧	3½	18	40	32	3½	3½	1076	3108.4	31E-2; 49W-3
⑨	4	14	36	28	2¾	3¼	715	2097.5	32E-G2
⑩	4½	14	34	26	2⅜	3¼	655	1893.7	32E-G4; 33E-G2&G4

*Reactions & Weights given are Maximums

BEARINGS
STRUCTURAL STEEL

SHEET A145

COMMONWEALTH OF KENTUCKY
DEPARTMENT OF HIGHWAYS
FRANKFORT
COUNTY OF
JEFFERSON
I 64-13TH ST. TO 7TH ST.
LOUISVILLE — LEXINGTON ROAD
S P 56-273-11L
STATION 208+08 P. E. PROJECT NO. I 64-2 (35) 3
CONSTRUCTION PROJECT NO. | MAINTENANCE PROJECT NO. | DRAWING NO. 18572

LETTITG DATE

DESIGNED BY WB & CBF DATE
DETAILED BY DATE
TRACED BY DATE
CHECKED BY CHH DATE 8-11-71
CHECKED BY DATE
CHECKED BY DATE
REVISED DATE
REVISED DATE
REVISED DATE

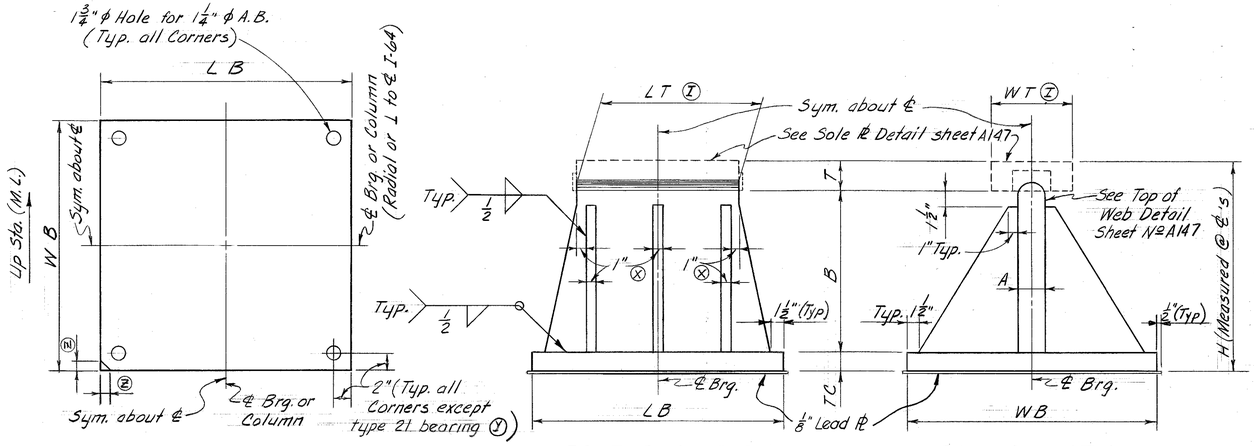

PLAN OF MASONRY PLATE

Ⓩ Clip all Corners 2" for type 21 bearing
Ⓨ Use 4" for type 21 bearing

FRONT ELEVATION

⊗ Use 1½" for type 21 & 15 Bearings

END ELEVATION

TYPE ⑬ thru ㉑ BEARINGS

BEARING TYPE ㉒ thru ㉝																				
TABLE OF DIMENSIONS IN INCHES																	React. (Kips)			
TYPE	WB	LB	TC	R1	R2	TS	A	a"	b"	c"	d"	e"	f"	g"	h"	θ1	θ2	West	East	Wgt. (Lbs)	Location
㉒	30	30	2¼	14	14	2½	3	9¾	9¾	9¾	9¾	8½	8½	8½	8½	ⓤ 0°-09'-00"	ⓤ 0°-09'-00"	123.2	163.0	1771.9	R3-1A
㉓	30	30	3	14	14	3¼	4	9	8 15/16	9	8 15/16	8½	8½	8½	8½	0°	0°-01'-34.5"	264.9	278.2	2046.9	37W-G3
㉓	30	30	3	14	14	3¼	4	9	8 15/16	9	8 15/16	8½	8½	8½	8½	0°	0°-01'-34.5"	258.3	302.8	2052.5	37W-G1
㉔	32	32	2¼	14	14	2½	3	9⅜	9⅜	9⅜	9⅜	8½	8½	8½	8½	0°-04'-30"	0°-04'-30"	236.3	161.0	1892.9	R1-17A
㉕	32	32	2½	14	14	2¾	3	9 3/16	9 3/16	9 3/16	9 3/16	8½	8½	8½	8½	ⓤ 0°-09'-00"	ⓤ 0°-09'-00"	309.7	284.0	1996.0	R3-1B
㉖	34	34	2¼	14	14	2½	3	9½	9½	9½	9½	8½	8½	8½	8½	0°-01'-48"	0°-01'-48"	174.0	195.6	2047.2	45E-G8
㉗	34	34	2¾	14	14	3	3	9⅜	9⅜	9⅜	9⅜	8½	8½	8½	8½	0°-01'-48"	0°-01'-48"	158.0	287.3	2296.0	45E-G6
㉘	34	34	3	14	14	3¼	3	9	9	9	9	8½	8½	8½	8½	0°	0°	373.2	264.9	2491.1	34W-G1 & G3
㉙	34	34	3	14	14	3¼	3½	8 15/16	8 15/16	8 15/16	8 15/16	8 5/16	8 7/16	8 7/16	8 5/16	0°-01'-34.5"	0°-01'-34.5"	264.8	330.6	2484.6	47W-G1
㉚	34	34	3¼	14	14	3½	3½	9 1/16	9 1/16	9 1/16	9 1/16	8½	8½	8½	8½	0°-01'-48"	0°-01'-48"	417.5	365.6	2567.7	45E-2
㉛	34	34	3¼	14	14	3½	3½	9¼	9¼	9¼	9¼	8½	8½	8½	8½	0°-01'-48"	0°-01'-48"	345.4	216.0	2545.2	45E-G4
㉜	34	34	3¼	14	14	3½	3½	8 13/16	8 13/16	8 13/16	8 13/16	8 9/16	8 11/16	8 11/16	8 5/16	0°-01'-34.5"	0°-01'-34.5"	246.2	372.5	2584.0	47W-G3
㉚	36	36	3	14	14	3¼	3	9	9	9	9	8½	8½	8½	8½	0°-04'-30"	0°-04'-30"	333.0	156.0	2588.7	R1-17B
㉛	34	34	2½	20	14	2¾	3½	9	9	9	9	8½	8½	8½	8½	0°-01'-48"	0°-01'-48"	159.0	223.5	2321.0	47W-G7
㉜	36	36	3	20	14	3¼	3½	9⅜	9⅛	9⅛	9⅜	8½	8½	8½	8½	0°-01'-48"	0°-01'-48"	163.0	343.4	2767.8	47W-G5
㉝	Ⓢ	Ⓢ	3½	14	14	3¾	3	See Type 33 Masonry Pl for details.										324.9	248.3	2642.6	39E-G2 & G4

ⓤ ℄ of Rocker angle converges opposite to that shown.
Ⓢ For dim. of Rocker Pl see Plan of type ㉝ Masonry Pl.

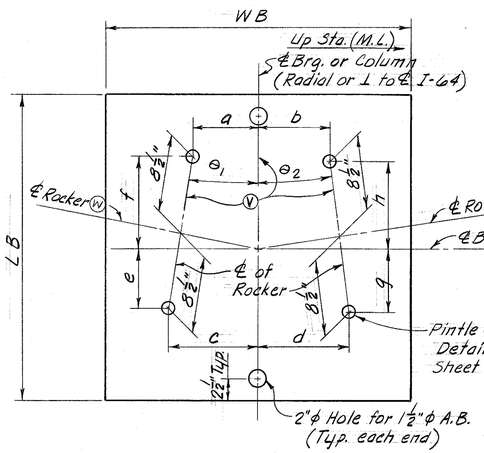

PLAN OF MASONRY Pl ㉒ thru ㉜

Ⓝ In some cases ℄ Gird. & ℄ Rocker do not occur at the same place
Ⓥ These lines are radial or ⊥ to ℄ (lines may converge opposite to that shown, see Framing Plan.)

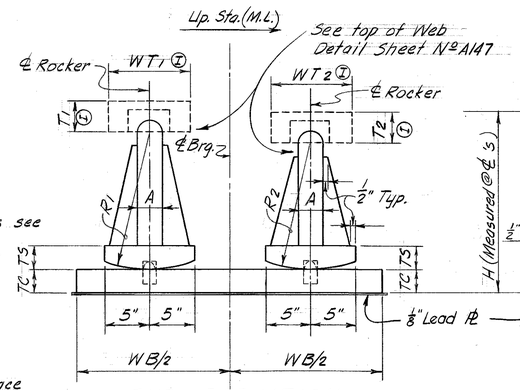

END ELEVATION

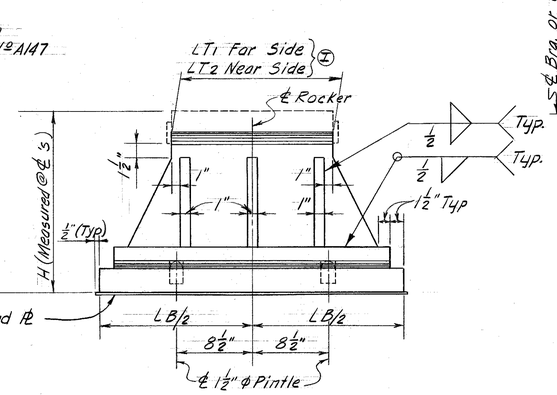

FRONT ELEVATION

TYPE ㉒ thru ㉝ BEARING

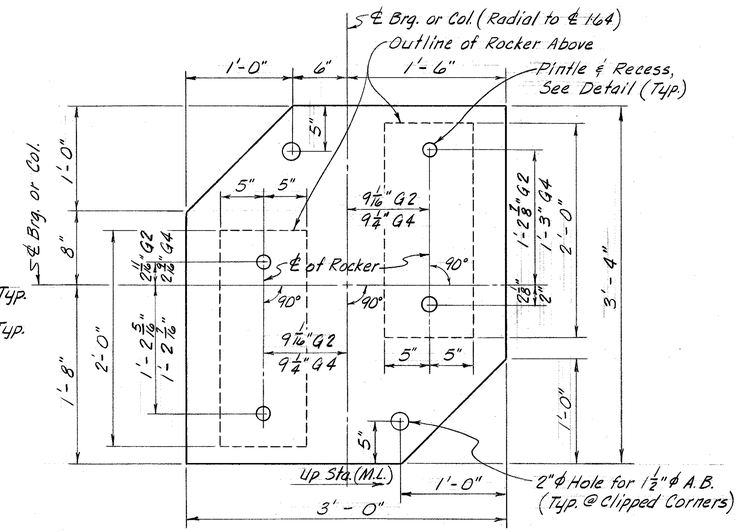

MASONRY PLATE FOR BRG. 39E G2 & G4

TYPE ㉝ MASONRY Pl

* React. & Weights given are Maximums.

BEARING TYPE ⑬ thru ㉑							
TABLE OF DIMENSIONS IN INCHES							
TYPE	A	B	TC	LB & WB	React. (Kips)*	Wgt. (Lbs)*	Location
⑬	3	18	2	28	744	1195.0	27W-G1 & G3; 27E-G2 & G4; 33W-G3; 35W-G1 & G3 37E-G2 & G4; 41E-G2 & G4; 42W-G1 & G3; 45W-G1 & G3
⑭	3	18	2	30	839	1402.6	33W-G1 & G5; 37E-G6; 43E-G2 & G4; 30W-G3
⑮	3	18	2	32	908	1572.4	30E-G4
⑯	3	16	2	28	715	1236.9	47E-2 & 6; 50W-1, 5 & 3
⑰	3	16	2	30	683	1341.5	50E-2 & 4
⑱	3½	18	2	32	852	1465.3	39W-G1 & G3
⑲	3½	18	2	34	1069	1650.3	34E-G2 & G4
⑳	3½	15½	2	30	879	1426.6	47E-4
㉑	4½	14½	3	40	1473	2736.1	30W-1

NOTE:
See "Geometrics for Bearings" on Framing Plans at Double Bearing Piers.

See "NOTES" Sheet Nº A147

Ⓘ For Dimensions see Sheet Nº A147 Under LT, WT, or T.

All material this sheet A36 unless noted.

BEARINGS
STRUCTURAL STEEL

SHEET A146

COMMONWEALTH OF KENTUCKY
DEPARTMENT OF HIGHWAYS
FRANKFORT
COUNTY OF
JEFFERSON
I 64-13TH ST. TO 7TH ST.
LOUISVILLE — LEXINGTON ROAD
SP 56-273-11L
STATION 208+08 **P.E. PROJECT NO.** I 64-2(35)3

CONSTRUCTION PROJECT NO.	MAINTENANCE PROJECT NO.	DRAWING NO.
		18572

LETTING DATE

DESIGNED BY E.L.H. CHECKED BY DATE REVISED
DETAILED BY CHECKED BY DATE REVISED
TRACED BY CHECKED BY DATE REVISED

LETTITG DATE

SOLE PLATE DIMENSIONS AND BEARING ELEVATION SUMMARY

Bearing Number	Brg. Type	Top of Sole Pl Elev.	* LT	* WT	* T	* H	Bottom of Masonry Pl Elev.
26W-G1	2	478.912	19	9	3 1/2	23 3/4	476.974
26W-G3	2	478.122	19	9	3 1/2	23 3/4	476.184
26E-G2	2	479.002	19	9	3 1/2	23 3/4	477.064
26E-G4	2	479.711	19	9	3 1/2	23 3/4	477.773
27W-G1	13	477.880	19	9	3 1/2	23 1/2	475.922
27W-G3	13	477.040	19	9	3 1/2	23 1/2	475.082
27E-G2	13	477.848	19	9	3 1/2	23 1/2	475.890
27E-G4	13	478.558	19	9	3 1/2	23 1/2	476.600
28W-G1	2	476.865	19	9	3 1/2	23 1/4	474.927
28W-G3	2	475.977	19	9	3 1/2	23 1/4	474.039
28E-G2	1	476.977	17	9	3 1/2	22 5/8	475.092
28E-G4	1	477.671	17	9	3 1/2	22 5/8	475.786
29W-G1	3	475.838	23	9	3 1/2	23 5/8	473.869
29W-G3	4	475.252	23	9	3 1/2	24	473.252
29E-G2	3	476.017	19	9	3 1/2	23 5/8	474.048
29E-G4	2	476.469	23	9	3 1/2	23 1/4	474.531
30W-1	21	474.654	24	10	6	23 1/2	472.696
30W-G3	13	473.768	23	9	3 1/2	23 1/2	471.810
30E-G4	15	475.055	23	9	3 1/2	23 1/2	473.097
31W-G3	5	472.704	17	9	3 1/2	23 5/8	470.735
31E-2	8	473.777	22	10	6	31 1/8	471.183
31E-G4	1	473.971	17	9	3 1/2	22 5/8	472.086
32W-G1	7	471.470	21	9	3 1/2	24 5/8	469.418
32W-3	12	471.928	24	10	6 1/2	37	468.845
32E-G2	9	472.135	19	9	3 1/2	23 5/8	470.166
32E-G4	10	472.581	19	9	3 1/2	23 1/4	470.643
33W-G1	14	469.674	25	9	3 1/2	23 1/2	467.716
33W-G3	13	469.216	19	9	3 1/2	23 1/2	467.258
33W-G5	14	468.904	19	9	3 1/2	23 1/2	466.946
33E-G2	10	470.857	17	9	3 1/2	23 1/4	468.919
33E-G4	10	471.304	17	9	3 1/2	23 1/4	469.366
34W-G1(33)	28	467.817	17	9	5	22 1/8	465.973
34W-G1(34)	28	467.759	17	9	4 5/16	21 7/16	465.973
34W-G3(33)	28	467.382	17	9	5	22 1/8	465.538
34W-G3(34)	28	467.323	17	9	4 5/16	21 7/16	465.538
R1-17A(33)	24	469.754	15	10	4 1/4	20 5/8	468.034
R1-17A(17)	24	469.711	15	9	3 3/4	20 5/8	468.034
R1-17-B(33)	30	468.781	16	10	4 1/4	21 3/8	467.000
R1-17-B(17)	30	468.750	15	10	3 7/8	21	467.000
34E-G2	19	469.261	23	9	3 1/2	23 1/2	467.303
34E-G4	19	469.780	23	9	3 1/2	23 1/2	467.822
35W-G1	13	466.351	19	9	3 1/2	23 1/2	464.393
35W-G3	13	465.877	19	9	3 1/2	23 1/2	463.919
35E-G2	11	467.063	25	9	4	27 5/8	464.761
35E-G4	11	467.751	25	9	4	27 5/8	465.449
36W-G1	2	464.579	19	9	3 1/2	23 1/4	462.641
36W-G3	2	463.654	19	9	3 1/2	23 1/4	461.716
36E-G2	2	465.741	17	9	3 1/2	23 1/4	463.803
36E-G4	1	466.430	17	9	3 1/2	22 5/8	464.545
36E-G6	2	466.485	17	9	3 1/2	23 1/4	464.547
37W-G1(36)	23	463.559	17	9	3 7/8	21	461.807
37W-G1(37)	23	463.526	17	9	3 1/2	20 5/8	461.807
37W-G3(36)	23	462.275	17	9	3 3/4	20 7/8	460.535
37W-G3(37)	23	462.254	17	9	3 1/2	20 5/8	460.535
37E-G2	13	464.485	19	9	3 1/2	23 1/2	462.527
37E-G4	13	465.484	17	9	3 1/2	23 1/2	463.526
37E-G6	14	465.070	19	9	3 1/2	23 1/2	463.112
38W-G1	4	462.935	19	9	3 1/2	24	460.935
38W-G3	3	461.673	19	9	3 1/2	23 5/8	459.704
38E-G2	2	463.744	17	9	3 1/2	23 1/4	461.806
38E-G4	2	465.044	17	9	3 1/2	23 1/4	463.106
38E-G6	2	464.243	17	9	3 1/2	23 1/4	462.305
39W-G1	18	463.178	19	9	3 1/2	23 1/2	461.220
39W-G3	18	461.917	19	9	3 1/2	23 1/2	459.959
R3-1A(38)	22	467.166	15	9	5 1/16	21 7/16	465.381
R3-1A(1)	22	467.058	15	9	3 3/4	20 1/8	465.381
R3-1B(38)	25	466.153	15	9	5 1/8	21 3/4	464.342
R3-1B(1)	25	466.040	15	9	3 3/4	20 3/8	464.342
39E-G2(38)	33	463.622	17	9	4 1/8	21 3/4	461.811
39E-G2(39)	33	463.571	17	9	3 1/2	21 1/8	461.811
39E-G4(38)	33	464.986	17	9	3 11/16	21 5/16	463.210
39E-G4(39)	33	464.970	17	9	3 1/2	21 1/8	463.210
40W-G1	4	464.326	19	9	3 1/2	24	462.326
40W-G3	3	463.065	19	9	3 1/2	23 5/8	461.096
40E-G2	1	463.654	17	9	3 1/2	22 5/8	461.769
40E-G4	1	465.054	17	9	3 1/2	22 5/8	463.169
41W-G1	2	465.355	17	9	3 1/2	23 1/4	463.417
41W-G3	2	464.084	17	9	3 1/2	23 1/4	462.146
41E-G2	13	464.336	17	9	3 1/2	23 1/2	462.378
41E-G4	13	465.736	17	9	3 1/2	23 1/2	463.778
42W-G1	13	466.139	17	9	3 1/2	23 1/2	464.181
42W-G3	13	464.861	17	9	3 1/2	23 1/2	462.903
42E-G2	1	464.999	17	9	3 1/2	22 5/8	463.114
42E-G4	1	466.399	17	9	3 1/2	22 5/8	464.514
43W-G1	1	466.878	17	9	3 1/2	22 5/8	464.993
43W-G3	1	465.606	17	9	3 1/2	22 5/8	463.721
43E-G2	14	465.875	19	9	3 1/2	23 1/2	463.917
43E-G4	14	467.274	19	9	3 1/2	23 1/2	465.316
44W-G1	1	468.983	17	9	3 1/2	22 5/8	467.098
44W-G3	1	467.695	17	9	3 1/2	22 5/8	465.810
44E-G2	3	467.011	19	9	3 1/2	23 5/8	465.042
44E-G4	3	468.410	19	9	3 1/2	23 5/8	466.441
45W-G1	13	469.430	17	9	3 1/2	23 1/2	467.472
45W-G3	13	468.142	17	9	3 1/2	23 1/2	466.184
45E-2(44)	29	469.298	18	9	4 1/4	21 5/8	467.496
45E-2(45)	29	469.317	15	10	4 1/2	21 7/8	467.496
45E-G4(44)	29	470.497	18	9	4	21 3/8	468.716
45E-G4(45)	29	470.517	15	10	4 1/4	21 3/8	468.716
45E-G6(6)	27	473.445	15	9	3 3/4	20 5/8	471.726
45E-G6(45)	27	473.557	15	10	5 1/8	22	471.726
45E-G8(6)	26	474.170	15	9	3 3/4	20 5/8	472.493
45E-G8(45)	26	474.296	15	10	5 1/4	21 5/8	472.493
46W-G1	1	469.519	17	9	3 1/2	22 5/8	467.634
46W-G3	1	468.232	17	9	3 1/2	22 5/8	466.347
46E-2	3	469.465	19	11	5 1/2	25 5/8	467.330
46E-4	3	471.065	19	11	5 1/2	25 5/8	468.930
46E-6	3	472.383	19	11	5 1/2	25 5/8	470.248
47W-G1(46)	28	469.298	17	10	3 5/8	20 3/4	467.567
47W-G1(48)	28	469.348	17	10	4 1/4	21 3/8	467.567
47W-G3(46)	29	468.010	17	10	3 5/8	21	466.259
47W-G3(48)	29	468.061	17	10	4 1/4	21 5/8	466.259
47W-G5(1)	32	471.540	17	9	3 11/16	26 13/16	469.305
47W-G5(48)	32	471.065	17	10	4	21 1/8	469.305
47W-G7(1)	31	470.769	17	9	3 5/8	26 1/4	468.582
47W-G7(48)	31	470.280	17	10	3 3/4	20 3/8	468.582
47E-2	16	469.370	15	11	5 1/2	23 1/2	467.412
47E-4	20	471.003	18	11	6	23 1/2	469.045
47E-6	16	472.669	15	11	5 1/2	23 1/2	470.711
48E-2	5	469.836	18	11	6	26 1/8	467.659
48E-4	5	472.084	18	11	6	26 1/8	469.907
49W-1	3	467.966	19	11	5 1/2	25 5/8	465.831
49W-3	8	466.365	22	10	6	31 1/8	463.771
49W-5	3	464.732	19	11	5 1/2	25 5/8	462.597
49E-2	6	468.339	18	11	6	26 5/8	466.120
49E-4	6	470.588	18	11	6	26 5/8	468.369
50W-1	16	466.457	15	11	5 1/2	23 1/2	464.499
50W-3	16	465.154	17	11	5 1/2	23 1/2	463.196
50W-5	16	463.850	17	11	5 1/2	23 1/2	461.892
50E-2	17	466.737	17	11	5 1/2	23 1/2	464.779
50E-4	17	468.332	17	11	5 1/2	23 1/2	466.374
51W-1	3	464.605	19	11	5 1/2	25 5/8	462.470
51W-3	3	463.836	19	11	5 1/2	25 5/8	461.701
51W-5	3	463.046	19	11	5 1/2	25 5/8	460.911
51E-2	3	464.718	19	11	5 1/2	25 5/8	462.583
51E-4	3	465.687	19	11	5 1/2	25 5/8	463.552

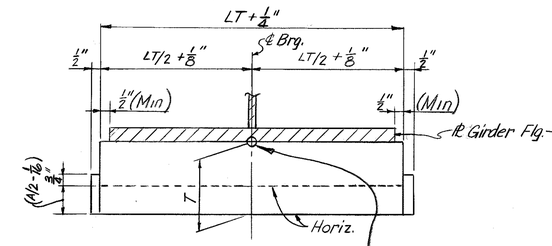

BEARING UNDER GIRDER
FRONT ELEVATION

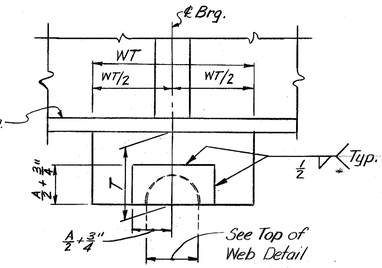

END ELEVATION
(Shown for Brg. Under Girder)

Top of Sole Pl Elevation

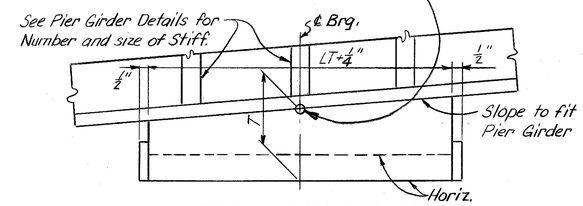

BEARING UNDER PIER GIRDER
FRONT ELEVATION
SOLE PLATE DETAIL
(All Material A36)

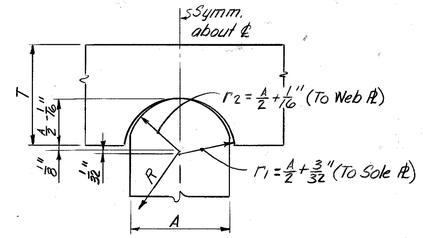

TOP OF WEB DETAIL

NOTES

BEARING WEIGHTS;
All weights shown are estimated weights and shall not be considered the final constructed weights of the pieces.

CLEARANCE;
Edges and corners of masonary plates shall be 3" minimum from face of concrete bridge seat.

PLATES;
Plates must be true and free of warp.

WHITE LEAD & TALLOW:
Finished surfaces of structural steel, formed by r1 & r2 radii, (in top of web detail) shall be coated with white lead & tallow in accordance with current specifications & revisions.

ANCHOR BOLTS;
Holes of depth and dimensions shown shall be drilled for anchor bolts or dowels, after base plates are properly set, by the superstructure contractor who shall be responsible for keeping holes dry in freezing weather. After base plates are properly set, anchor bolt holes drilled and anchor bolts are placed in drilled holes, molten lead shall be poured in holes and packed until holes are completely filled flush to top of base plates. At time of setting, Anchor Bolts are to be heated to a blue heat to assure free flow of lead to bottom of holes. The cost of drilling anchor bolt holes, furnishing lead, and filling holes with molten lead shall be incidental to and included in the lump sum bid for structural steel.

FINISHED SURFACES;
See Ky. Dept. of Higway Std. Specifications 408.3.1 for Finished Surfaces.

STEEL;
All steel to be A-36 unless noted.

GENERAL NOTES;
See Sheet No A2 for General Notes

* Dimension in Inches (Refered to as T1 or T2, WT1 or WT2, etc. on Sheet A146)

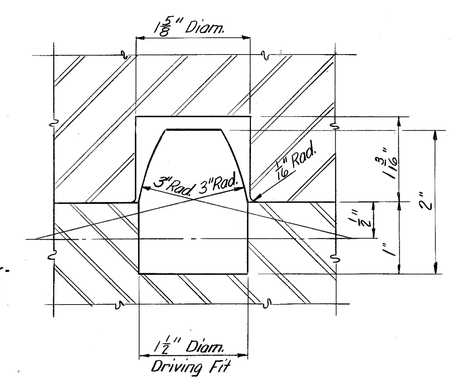

PINTLE AND RECESS DETAIL

TABLE OF SHOES USING 1 1/2" SWEDGED ANCHOR BOLTS	
34W-G1	39E-G4
34W-G3	45E-2
R1-17A	45E-G4
R1-17B	45E-G6
37W-G1	45E-G8
37W-G3	47W-G1
R3-1B	47W-G3
R3-1A	47W-G5
39E-G2	47W-G7

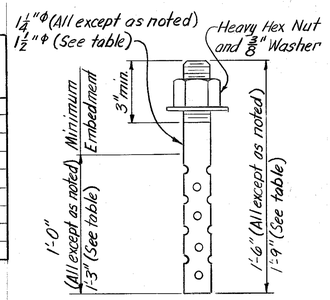

SWEDGED ANCHOR BOLT DETAIL

SUMMARY OF BEARING WEIGHTS (LBS)

Single Expansion —	128,727
Double Expansion —	42,211
Fixed —	46,367
TOTAL —	217,305

BEARINGS
STRUCTURAL STEEL

SHEET A147

COMMONWEALTH OF KENTUCKY
DEPARTMENT OF HIGHWAYS
FRANKFORT
COUNTY OF
JEFFERSON

I 64-13TH ST. TO 7TH ST.
LOUISVILLE — LEXINGTON ROAD

STATION 208+08 — P. E. PROJECT NO. I 64-2(35)3 — SP 56-273-11L

CONSTRUCTION PROJECT NO.	MAINTENANCE PROJECT NO.	DRAWING NO.
		18572

DESIGNED BY RHC — DATE
DETAILED BY CBF — DATE
TRACED BY CBF — DATE
CHECKED BY CHH — DATE
CHECKED BY CHH — DATE
CHECKED BY CHH — DATE 3-17-71
REVISED
REVISED
REVISED

FED. ROAD DIST.	STATE	FED. AID PROJ. NO.	FISCAL YEAR	SHEET NO.	TOTAL SHEETS
7	KY.				

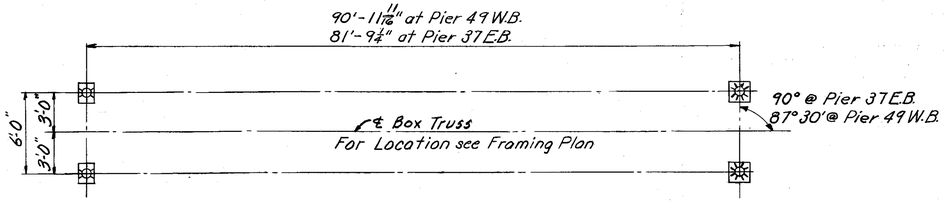

PLAN

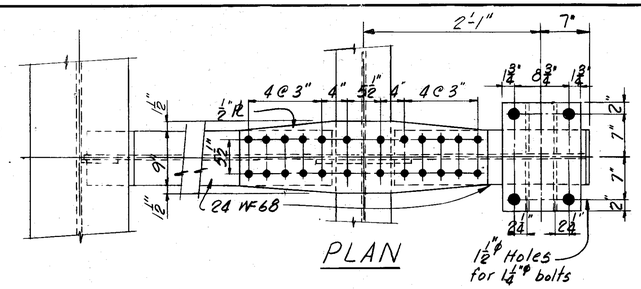

PLAN

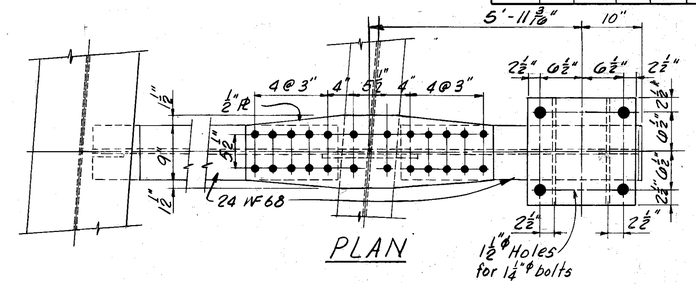

PLAN

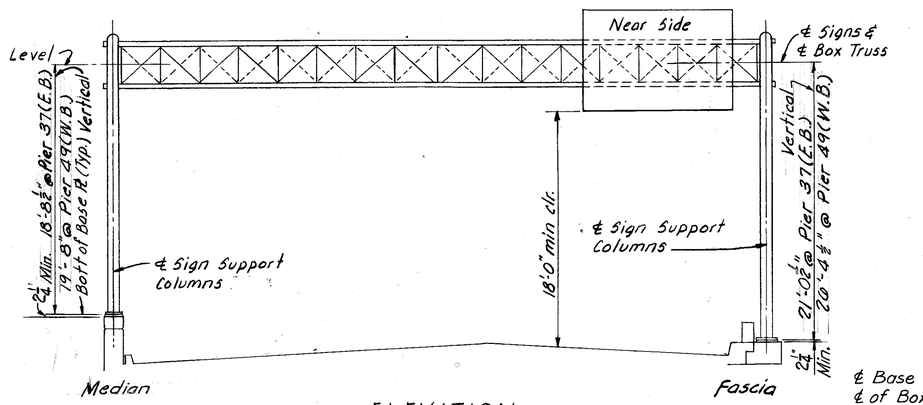

ELEVATION
SIGN SUPPORT @ PIERS
37 (EB) & 49 (WB)

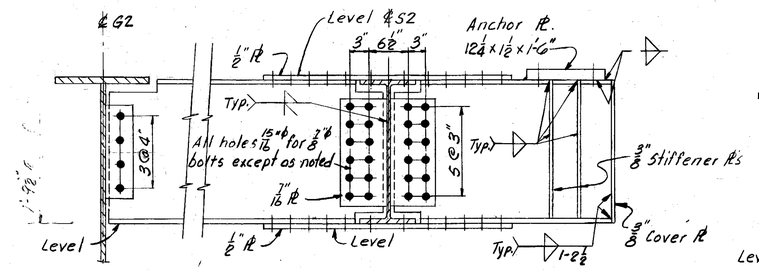

ELEVATION
SIGN SUPPORT @ MEDIAN
(0' West of Pier 37 E.B.)

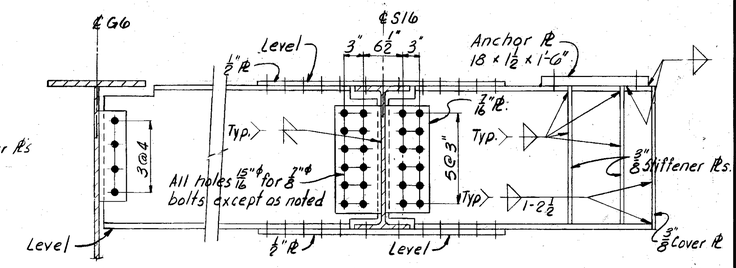

ELEVATION
SIGN SUPPORT @ FASCIA
(0' West of Pier 37 E.B.)

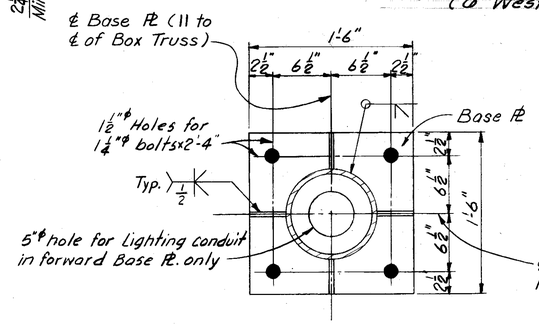

PLAN

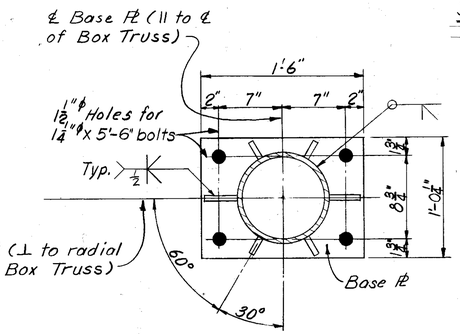

PLAN

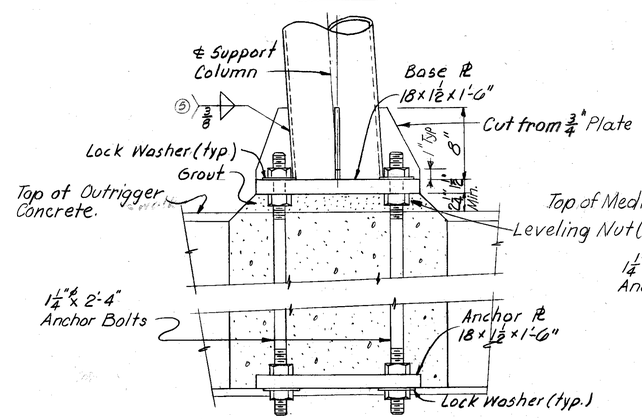

ELEVATION
FASCIA BASE PLATE DETAIL

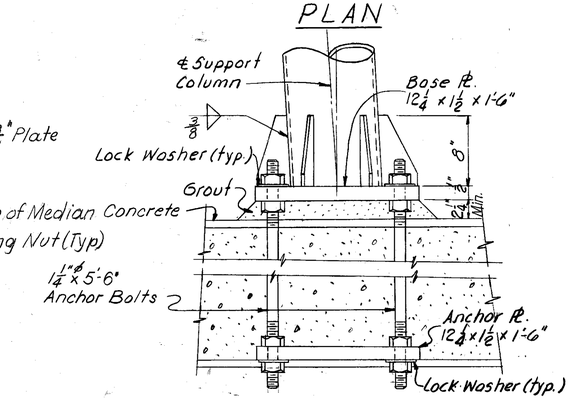

ELEVATION
MEDIAN BASE PLATE DETAIL

SIGN SUPPORT DETAILS

Notes:

Anchor Bolts, Nuts and Washers included in Structural Steel.

Designed for 44 #/ft² wind on a sign area of 400 ft² and in accordance with "Specifications for the Design and Construction of Structural Supports for Highway Signs" Published by AASHO, 1961

For Std. Overhead Sign Supports See Sheet B40 thru B43 of Drawing No. 18573.

For Concrete Details @ Std. Overhead Sign Supports See Sheets B32 & B33 of Drawing No. 18573.

SHEET A148

COMMONWEALTH OF KENTUCKY
DEPARTMENT OF HIGHWAYS
FRANKFORT
COUNTY OF
JEFFERSON
I64-13TH ST. TO 7TH ST.
LOUISVILLE — LEXINGTON
ROAD
SP 56-273-IIL
STATION 208+08
PROJECT NO. I64-2(35)3

BRIDGE NUMBER	DRAWING NO.	INDEX
	18572	

DESIGNED BY RHMS CHECKED BY GLW DATE 3/71 REVISED DATE
DETAILED BY CHECKED BY DATE REVISED DATE
TRACED BY CHECKED BY DATE REVISED DATE

DIETZGEN NO. 126-2 ASEPROOF

FED. ROAD DIST.	STATE	FED. AID PROJ. NO.	FISCAL YEAR	SHEET NO.	TOTAL SHEETS
7	KY.		1970		

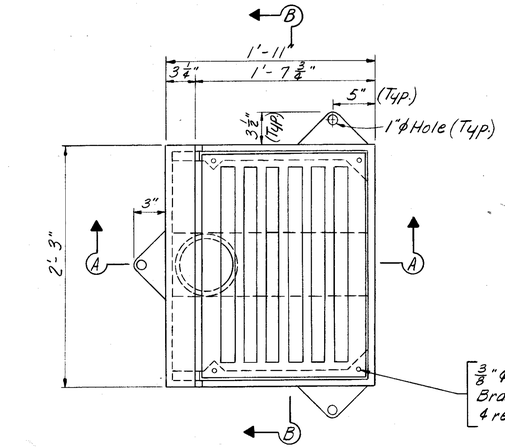

TYPE I DECK DRAIN
Drain Casting @ Median Curb
(31 Required)

[3/8"ϕ Ctsk. Holes for 5/16"ϕ X 3" Brass Screws with ctsk. heads. 4 req'd for each grate.]

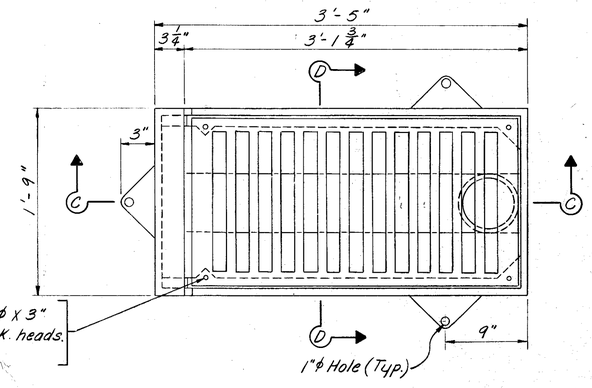

TYPE II DECK DRAIN
Drain Casting @ Fascia Curb
(45 Required)

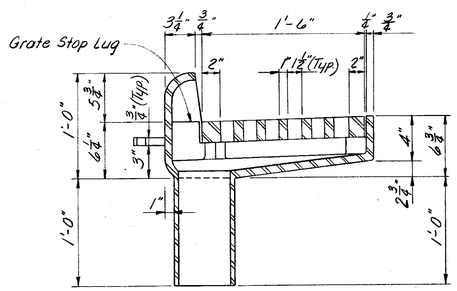

SECTION A-A

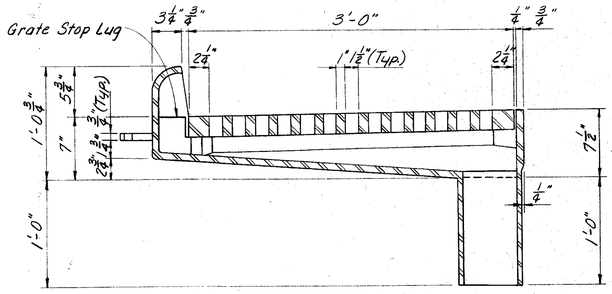

SECTION C-C

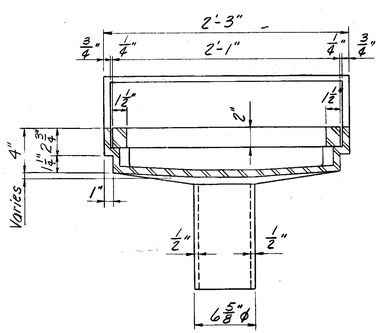

SECTION B-B

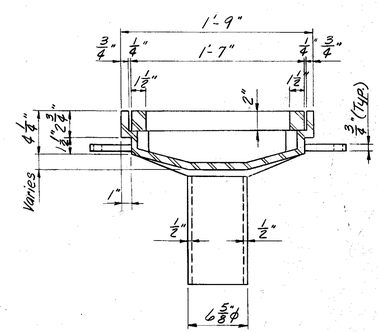

SECTION D-D

Wall thickness of castings to be 3/4" except outlet pipe.

Foundry Notes:
Body of Drain Casting shall be Gray Cast Iron ASTM A48, Class No. 30A* Drain Grates shall be Cast Steel, ASTM A27, Grade 70-36. Fit grate to body and ship in place. Form T-521 report of field inspection of castings is to be submitted to the laboratory. Payment for drain castings will be included in lump sum bid price of Structural Steel. Surfaces in contact with concrete shall not be painted.

* Ductile Iron, ASTM A536, Grade 60-40-18, may be substituted for Gray Cast Iron or Cast Steel.

DRAINS AND DRAIN PIPE DETAILS

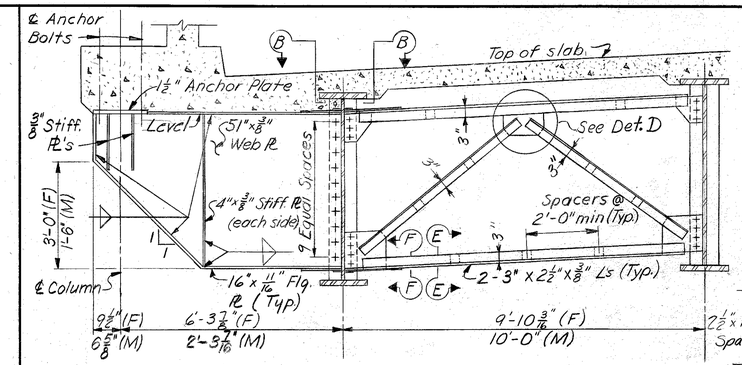

SIGN SUPPORT BRACKET & CROSSFRAME CF-3
Fascia Shown, Median Similar. (F) denotes Fascia (M) denotes Median

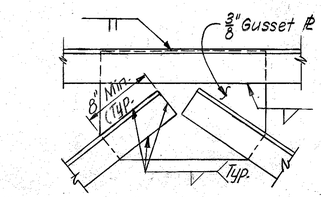

DETAIL D

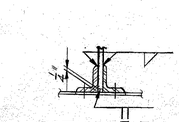

SECTION E-E

SECTION F-F

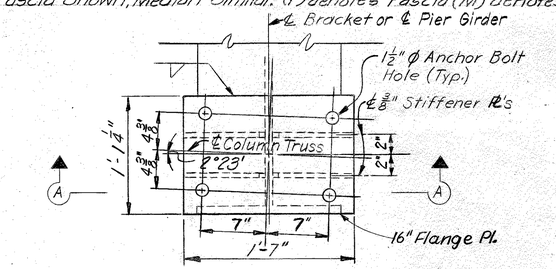

MEDIAN ANCHOR PLATE

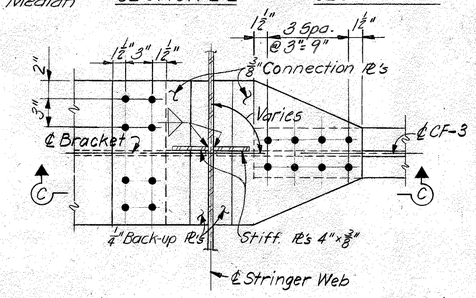

SECTION B-B

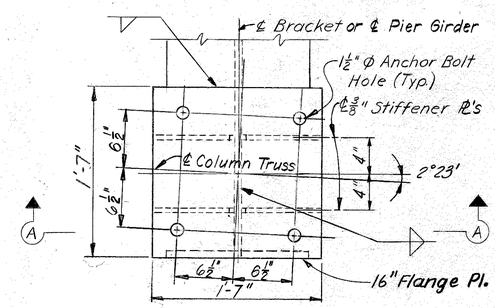

FASCIA ANCHOR PLATE

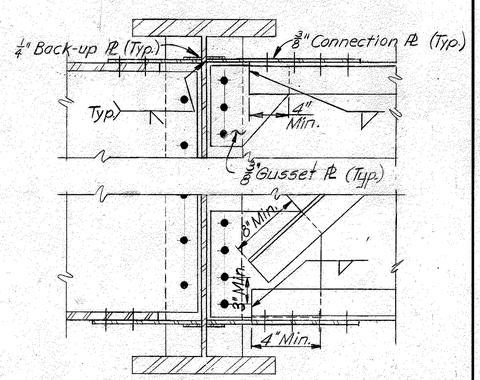

SECTION C-C

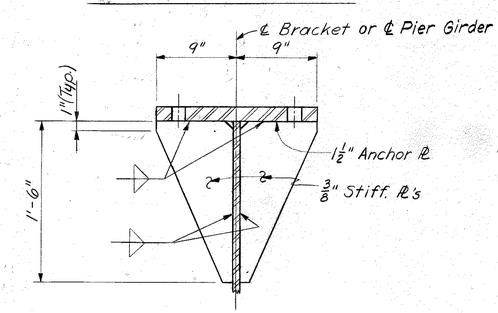

SECTION A-A

SIGN SUPPORT DETAIL (PIER 49 W.B.)

SHEET A149

COMMONWEALTH OF KENTUCKY
DEPARTMENT OF HIGHWAYS
FRANKFORT
COUNTY OF
JEFFERSON
I 64-13TH ST. TO 7TH ST.
LOUISVILLE – LEXINGTON
ROAD

STATION 208+08 | SP 56-273-11L | **PROJECT NO.** I 64-2(35)3

BRIDGE NUMBER | DRAWING NO. 18572 | INDEX

DESIGNED BY EB	CHECKED BY PME	DATE 11-70	REVISED
DETAILED BY R.M.&C.	CHECKED BY PME	DATE 11-70	REVISED
TRACED BY	CHECKED BY	DATE	REVISED

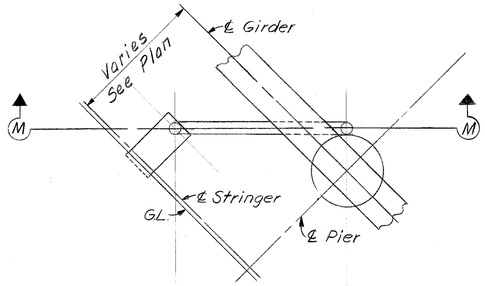

PLAN

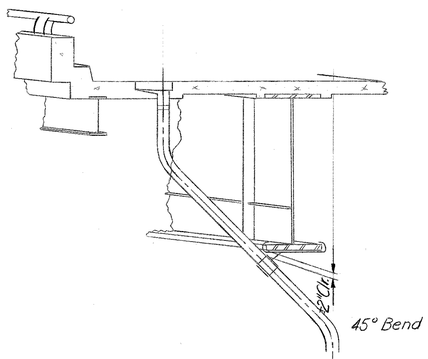

SECTION M-M

F.B. SYSTEM-TYPE II
CASTING AT FACIA

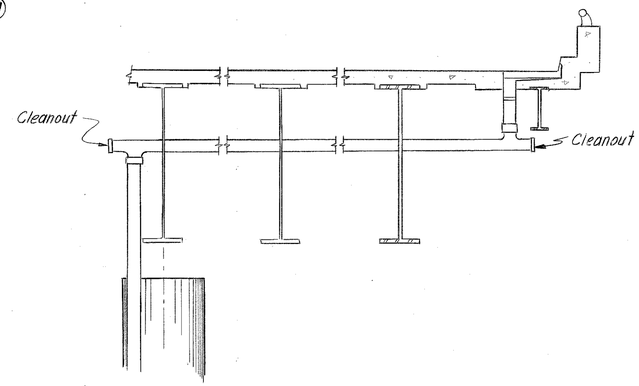

TYPE II AT PIER 32 W.B.
Pier 31 Similar

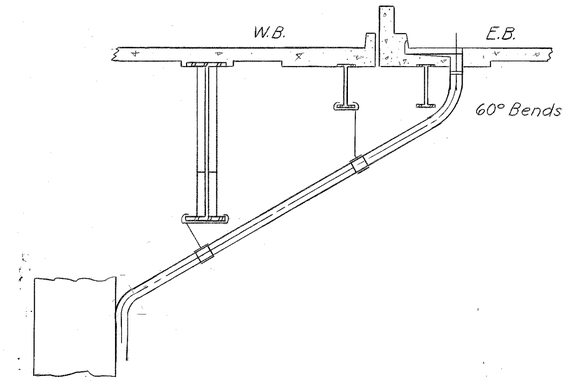

TYPE II AT PIER 30

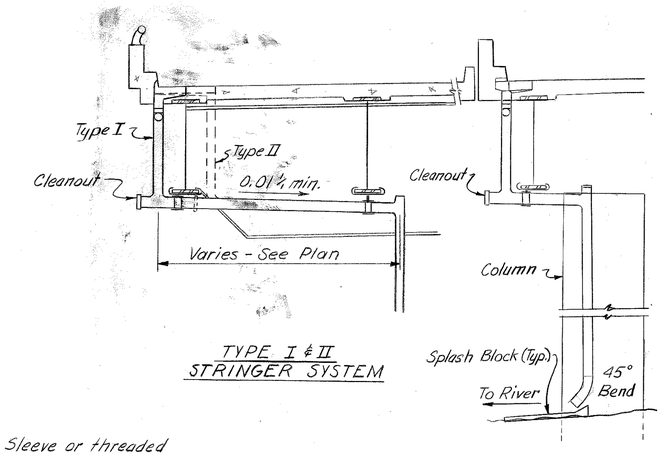

TYPE I & II
STRINGER SYSTEM

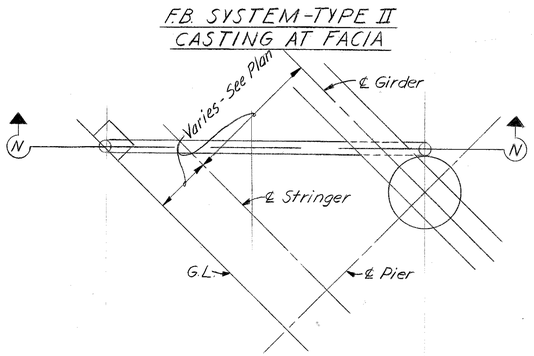

PLAN

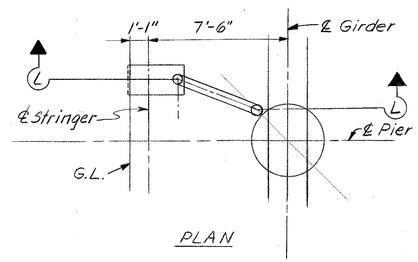

PLAN

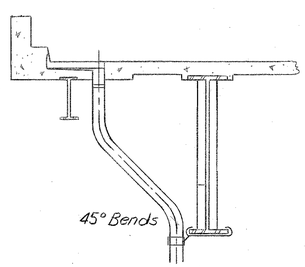

SECTION L-L

F.B. SYSTEM-TYPE II
CASTING AT MEDIAN

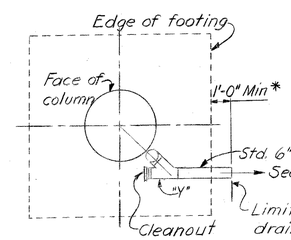

PLAN AT FOOTINGS

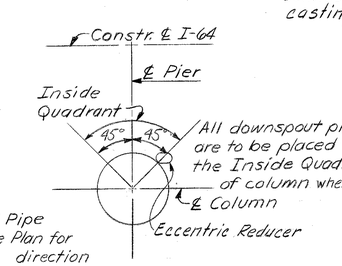

*6" Pipe to be extended where necessary so that Sewer Pipe will clear Crashwall.

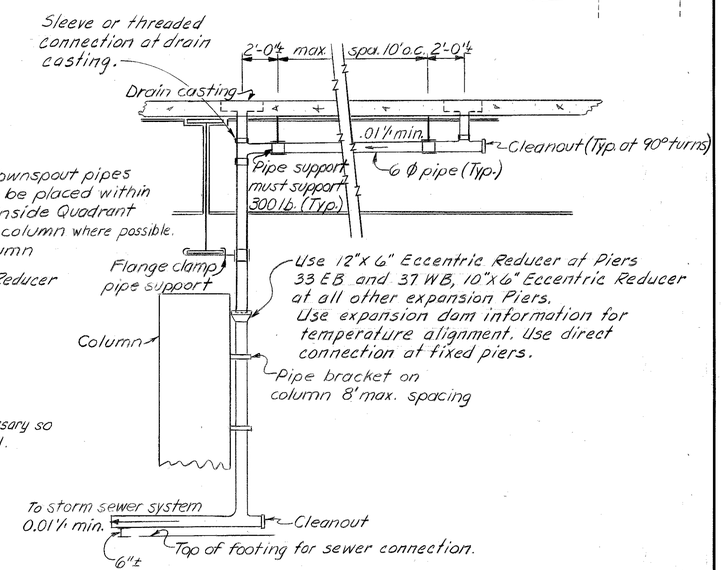

DRAINAGE SCHEME
Use details shown where applicable

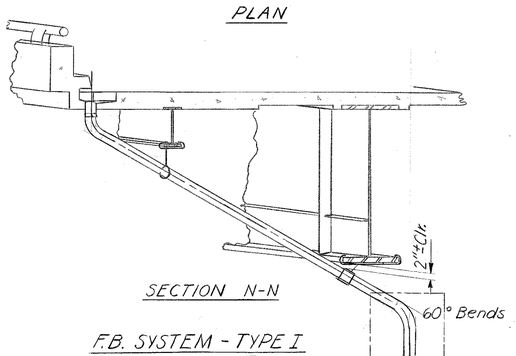

SECTION N-N

F.B. SYSTEM - TYPE I
CASTING AT FACIA

NOTES:

1. All pipe shown on drainage sheets is 6" ϕ Drain Pipe.
2. Drain Pipe shall be 6" ϕ Standard Weight continuous Steel Pipe in accordance with Article 643.12.0 of the Specifications.
3. Pipe, fittings, connections and supports, complete and in place, are to be paid for at the unit price per lineal foot of 6" ϕ Drain Pipe.
4. Pipe and all fittings shall be painted same as Structural Steel (See Structural Steel Notes, Sheet A3)
5. All anchoring devices for pipe drains shall be so constructed as to be rattle free and secured against rotation or translation.
6. All pipe connections shall be leak proof.
7. Pipe shall be cut and welded to field dimensions.
8. All pipe shall be supported every 10' maximum horizontally and 8' maximum vertically.
9. Either ¾" ϕ Pipe Hanger or Stiffener Pipe Hanger may be used for intermediate support.
10. Bends to be "long radius bends" where possible.
11. Shop Drawings will be required for drainage details.

DRAIN DETAILS

SHEET A150

COMMONWEALTH OF KENTUCKY
DEPARTMENT OF HIGHWAYS
FRANKFORT
COUNTY OF
JEFFERSON

I64-13TH ST. TO 7TH ST.
LOUISVILLE - LEXINGTON ROAD
SP 56-273-11L

STATION 208+08 | P. E. PROJECT NO. I64-2(35)3

CONSTRUCTION PROJECT NO.	MAINTENANCE PROJECT NO.	DRAWING NO.
		18572

LETTING DATE

DESIGNED BY JFK DATE 2-71 CHECKED BY EW DATE REVISED
DETAILED BY JFK DATE EW CHECKED BY DATE REVISED
TRACED BY CHECKED BY DATE REVISED

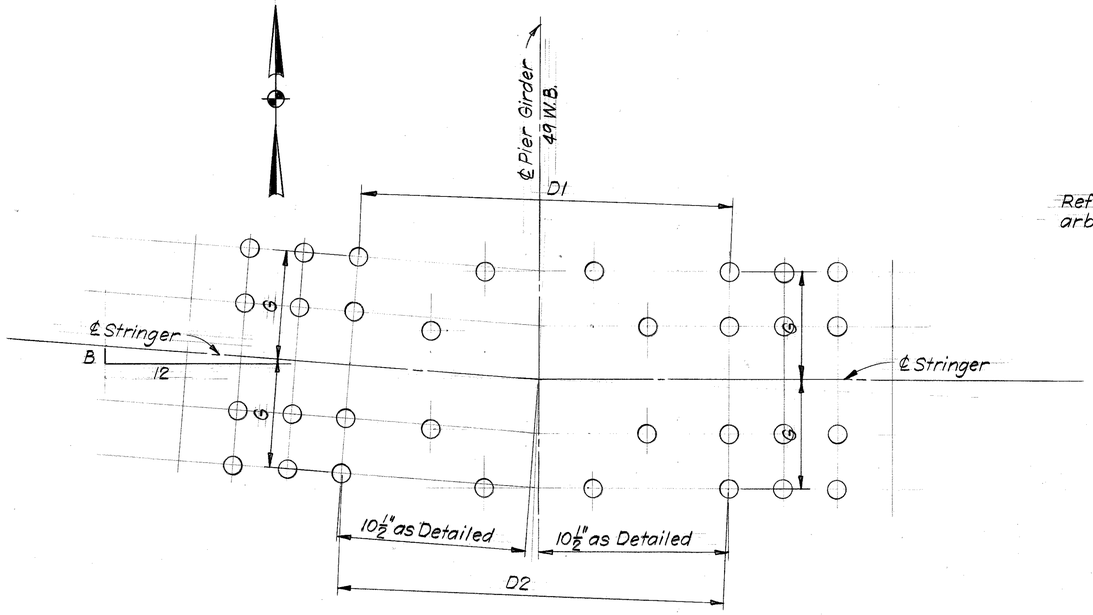

PLAN-TYP. TOP FLANGE SPLICE *

This applies to the outside splice plates and the 2 splice plates inside the flanges.

After the splice plates are bent the required amount, the dimensions D1 and D2 are to be measured on the splice plates and on the stringers. D1 and D2 on the splice plates should not exceed the values given in the tables below. Note that D1 and D2 are functions of the existing bevel B at each stringer.

The Engineer shall be notified if, for any stringer, D1 and D2 on the splice plates exceed D1 and D2 on the stringers.

For top flange splice plate details see Shop Drwgs. shts. 330-336, X34 and X35.

Stringer	G62-G72	G64-G73	G65-G74	G66-G75	G67-G76	G68-G77	G69-G78	G70-G79	G71-G80
G	6"	5½"	6"	←				← 6"	6½"
D1 & D2	Table 1	Table 2	Table 1	←				← Table 1	Table 3

B	TABLE 1 D1	TABLE 1 D2	TABLE 3 D1	TABLE 3 D2
1"	20½"	21½"	20 7/16"	21 9/16"
7/8"	20 9/16"	21 7/16"	20½"	21½"
3/4"	20⅝"	21⅜"	20⅝"	21⅜"
5/8"	20 11/16"	21⅝"	20 11/16"	21⅝"
½"	20¾"	21¼"	20¾"	21¼"

B	TABLE 2 D1	TABLE 2 D2
3/8"	20 13/16"	21 3/16"
¼"	20⅞"	21⅛"
⅛"	20 15/16"	21 1/16"

* Also for bottom flange splices of fascia stringers G62-G72 & G71-G80.

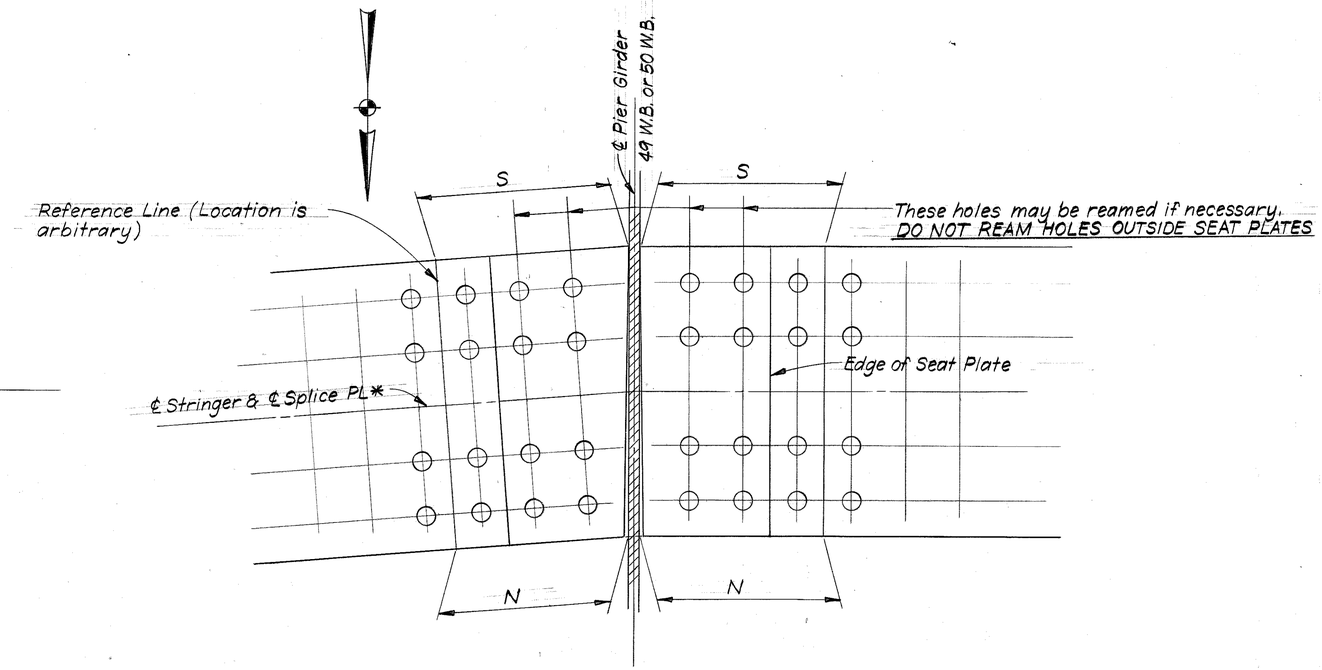

* Must be parallel before measurements are made.

BOTTOM VIEW-TYP. INTERIOR BOTTOM FLANGE SPLICE

Match-mark splice plates and stringers before removing splice plates.

The measurements N and S are to be made along the north and south edges of each splice plate from the reference line to the pier girder web and entered in the table below. The milled end of each splice plate is to be built up by welding and remilled so that the distance from the reference line to the milled end measured along the north and south edges of the plate is equal to N+1/16" and S+1/16" respectively.

When splice plates are rebolted to bottom flanges, bolting should begin at the end of the plate away from the milled end and proceed toward the pier girder.

For bottom flange splice plate details see Shop Drwgs. shts. 313-322, 330-336 and X36.

Pier 49 W.B.

	G64		G65		G66		G67		G68		G69		G70	
West Stringers	N	S	N	S	N	S	N	S	N	S	N	S	N	S
+	0.063	0.063	←									→	0.063	0.063
=														

	G73		G74		G75		G76		G77		G78		G79	
East Stringers	N	S	N	S	N	S	N	S	N	S	N	S	N	S
+	0.063	0.063	←									→	0.063	0.063
=														

Note: Crossed-out stringers do not require correction.

Pier 50 W.B.

	G73		G74		G75		G76		G77		G78		G79	
West Stringers only	N	S	N	S	N	S	N	S	N	S	N	S	N	S
+	0.063	0.063	←									→	0.063	0.063
=														

PIER 49 WB & 50 WB

MODIFICATIONS TO STRINGER SPLICES

SHEET A151

COMMONWEALTH OF KENTUCKY
BUREAU OF HIGHWAYS
FRANKFORT
COUNTY OF
JEFFERSON
I64-13th ST. TO 7th ST.

ROAD SP56-273-11L
STATION P. E. PROJECT NO. I64-2(35)3

CONSTRUCTION PROJECT NO.	MAINTENANCE PROJECT NO.	DRAWING NO.
ACI 64-2(87)3		18572

UPDATE DATE
LETTING DATE

DESIGNED BY ERW & RHC CHECKED BY
DETAILED BY DME CHECKED BY
TRACED BY CHECKED BY
DATE 12-18-74 REVISED
DATE REVISED
DATE REVISED
DATE REVISED